LINK BRM 1-60

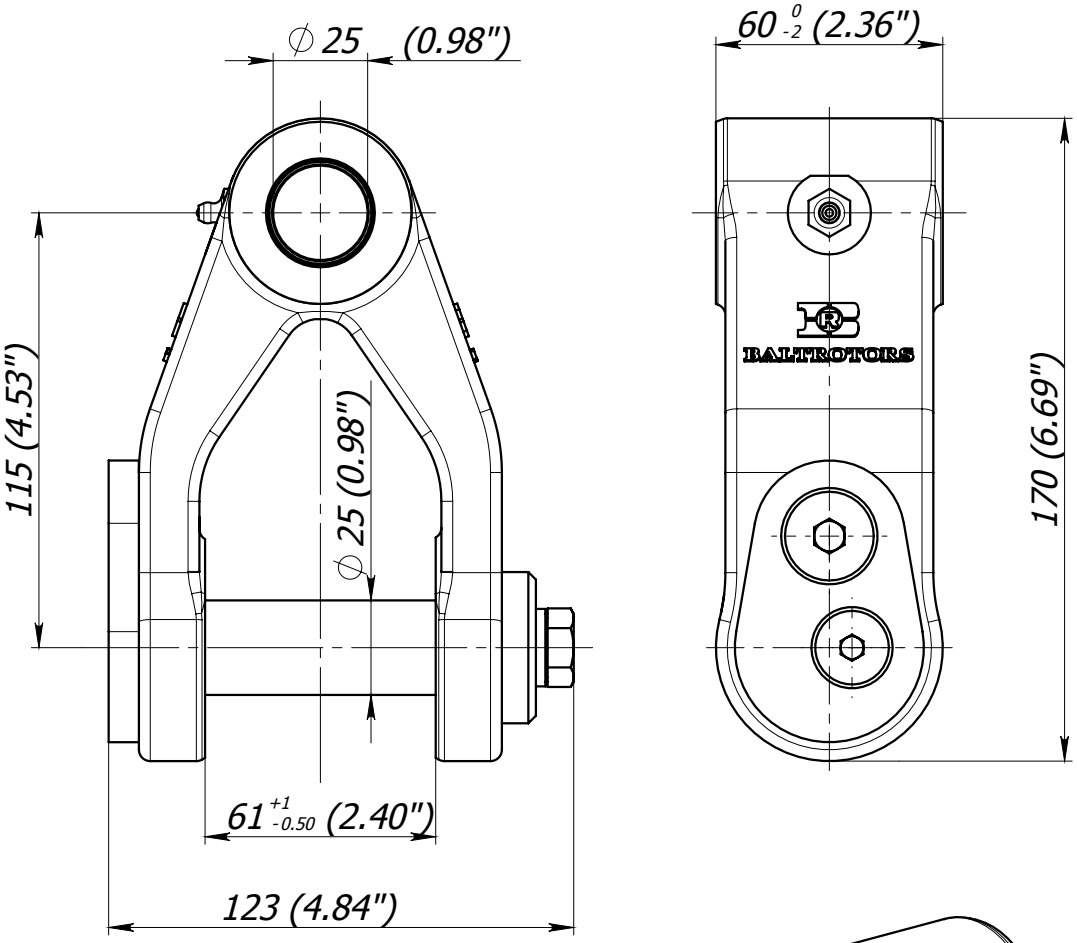

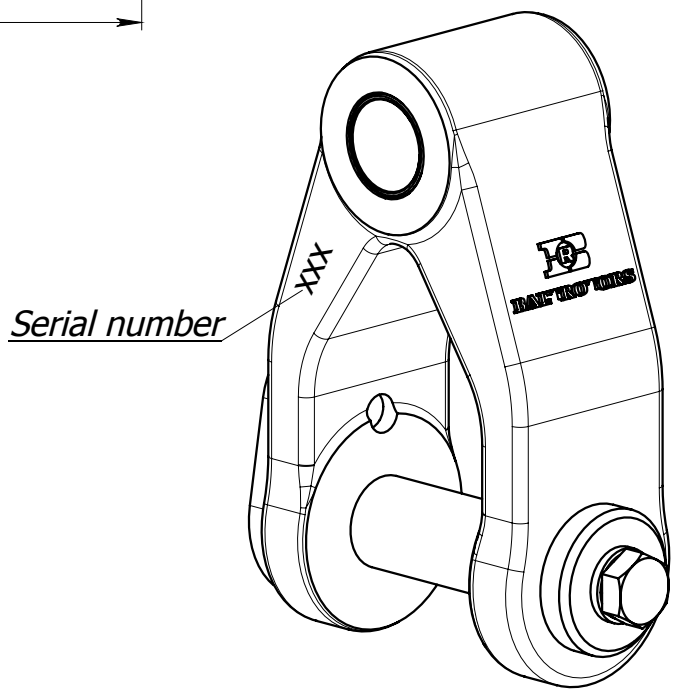

** Weight - 3.45 kg (7.60 lb)*
** Fill grease Starplex EP 2, through lubricating nipple (pos. 10), until it will appear to the external surfaces. Greasing must be repeated after every 8 working hours of the link.*

BALTROTORS
Instituta Street - 1, Salaspils. Riga region, LATVIA LV-2169
Phone: +(371) 67 981074, Fax: +(371) 67 981075
E-mail: baltrotors@baltrotors.lv

LINK BRM 1-60

List of parts

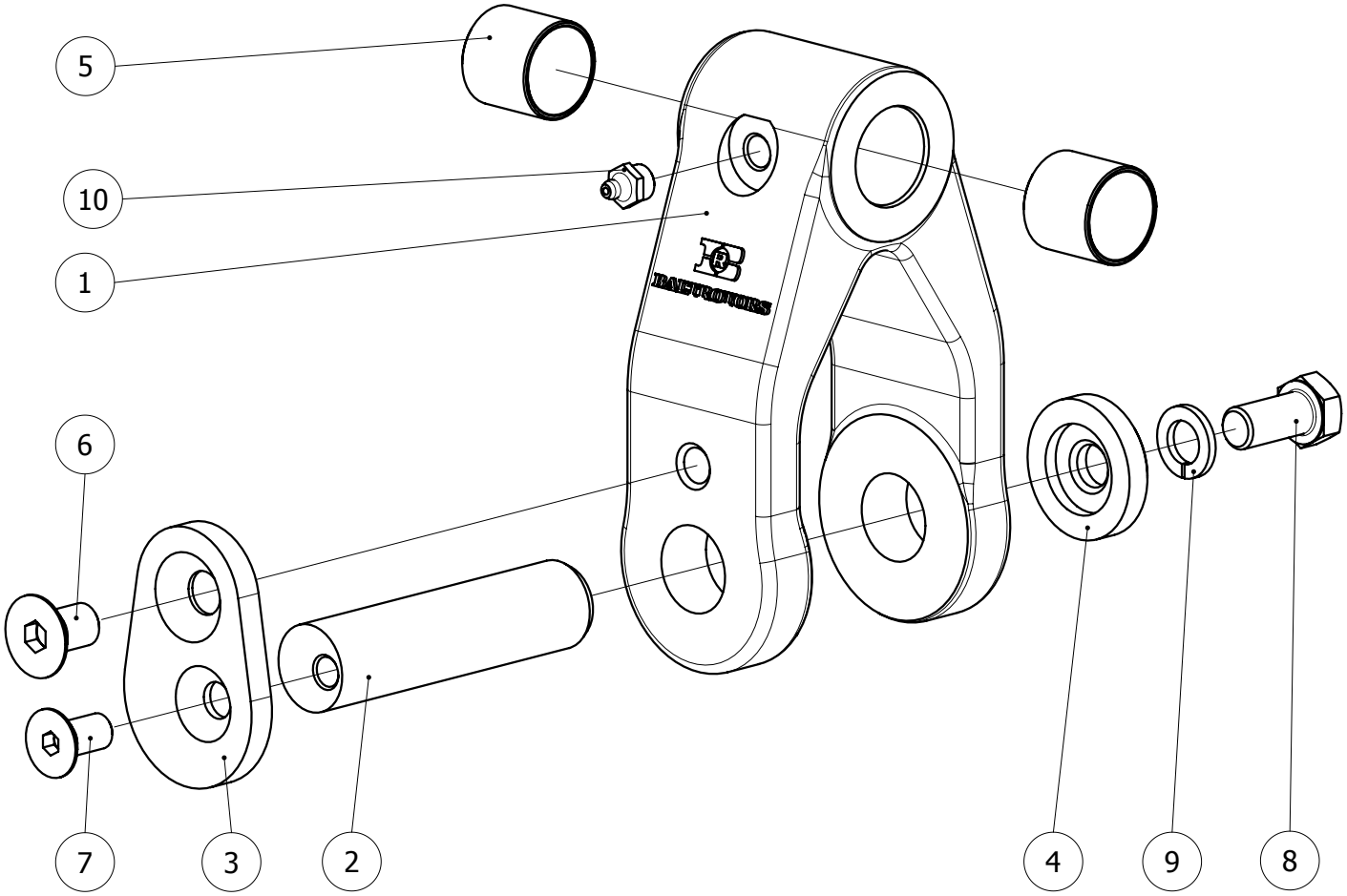

Pos.	Part No.	Description	Quantity
1	BRM 1-60.001	Link	1
2	BRM 1-60.002	Axle	1
3	BRM 1-60.003	Plate	1
4	BRM 1-60.004	Washer	1
5	WB 800 2525	Bronze bushing	2
6	MF6S 10.9 M12x20	Screw	1
7	MF6S 10.9 M10x20	Screw	1
8	ISO 4017 - M12 x 25-N	Screw	1
9	DIN 127 B ø12	Spring washer	1
10	1.2.C6	Grease nipple	1

2007.10.18.

BALTROTORS

Instituta Street - 1, Salaspils. Riga region, LATVIA LV-2169
Phone: +(371) 67 981074, Fax: +(371) 67 981075
E-mail: baltrotors@baltrotors.lv

LINK BRM 1-73

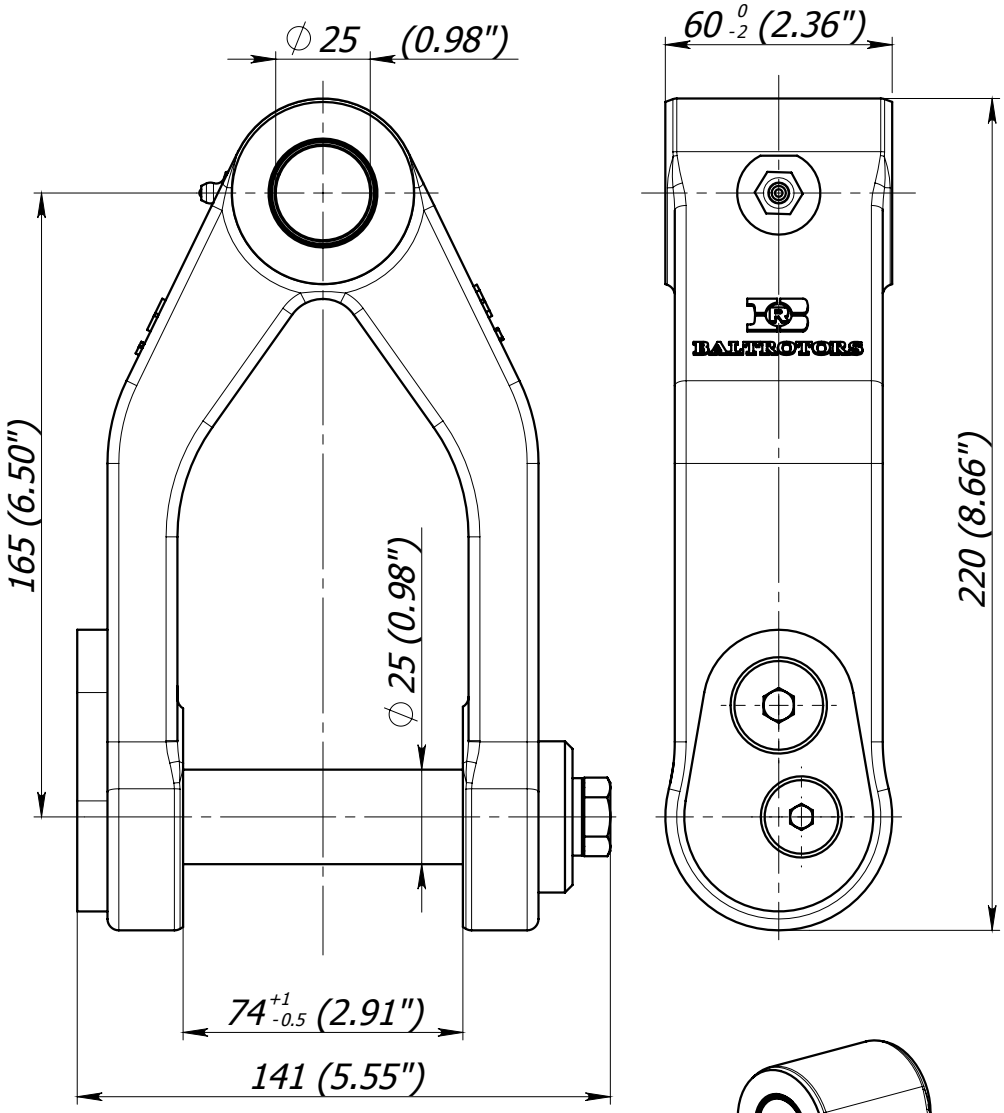

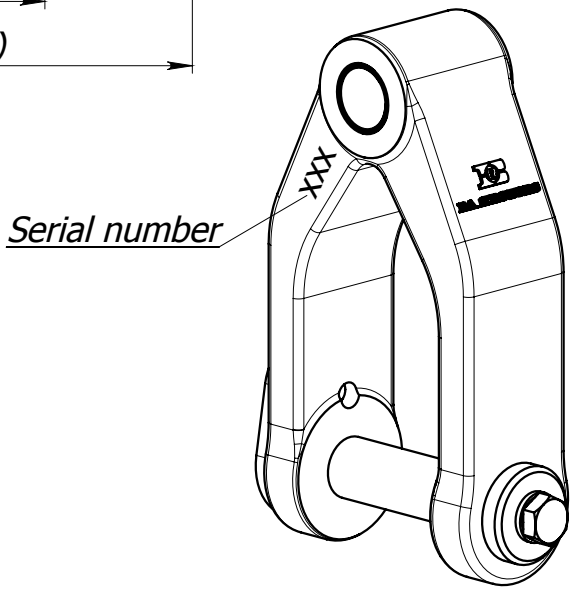

** Weight - 4.78 kg (10.53 lb)*
** Fill grease Starplex EP 2, through lubricating nipple (pos. 10), until it will appear to the external surfaces. Greasing must be repeated after every 8 working hours of the link.*

BALTROTORS
Instituta Street - 1, Salaspils. Riga region, LATVIA LV-2169
Phone: +(371) 67 981074, Fax: +(371) 67 981075
E-mail: baltrotors@baltrotors.lv

LINK BRM 1-73

List of parts

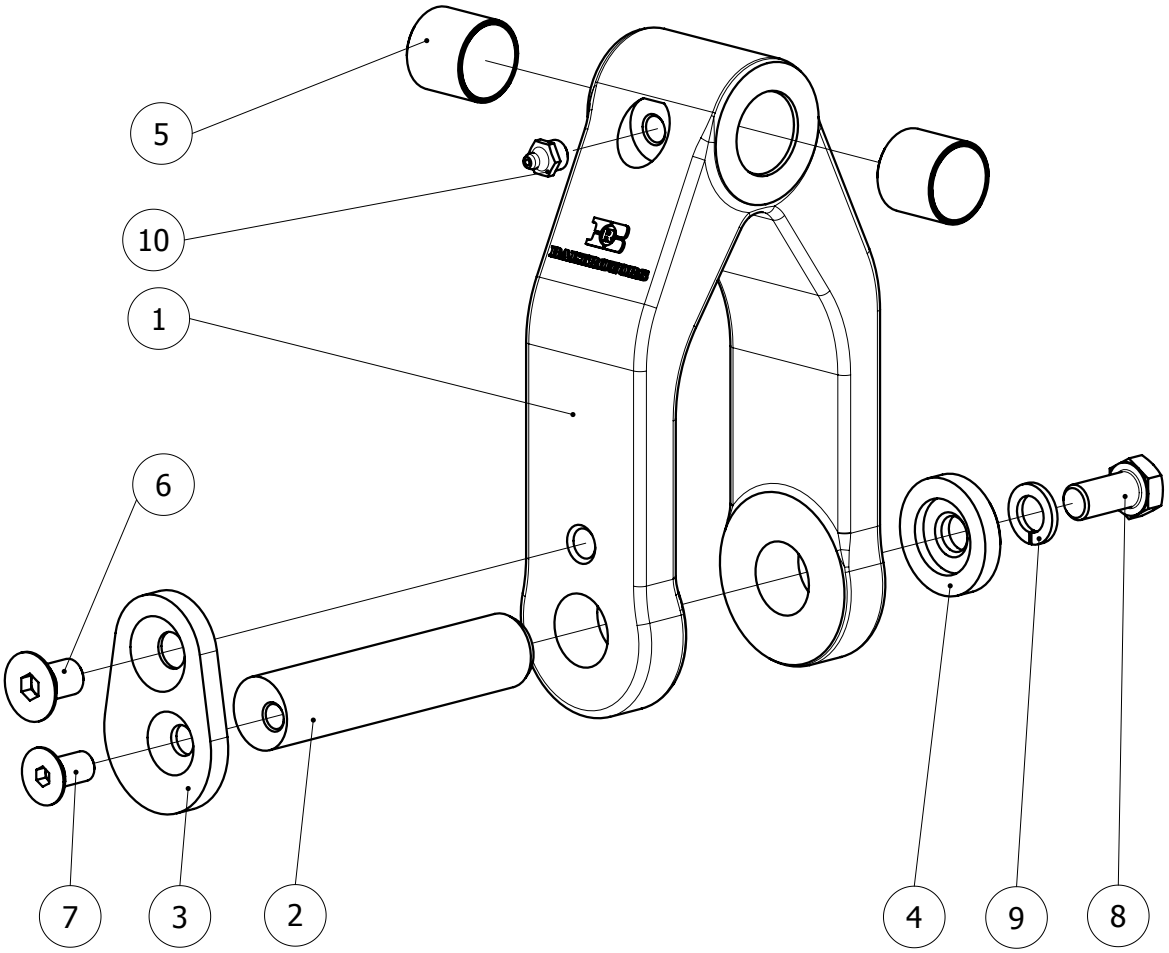

Pos.	Part No.	Description	Quantity
1	BRM 1-73.001	Link	1
2	BRM 1-73.002	Axle	1
3	BRM 1-60.003	Plate	1
4	BRM 1-60.004	Washer	1
5	WB 800 2525	Bronze bushing	2
6	MF6S 10.9 M12x20	Screw	1
7	MF6S 10.9 M10x20	Screw	1
8	ISO 4017 - M12 x 25-N	Screw	1
9	DIN 127 B ø12	Spring washer	1
10	1.2.C6	Grease nipple	1

2007.10.18.

BALTROTORS

Instituta Street - 1, Salaspils. Riga region, LATVIA LV-2169
Phone: +(371) 67 981074, Fax: +(371) 67 981075
E-mail: baltrotors@baltrotors.lv

LINK BRM 10-60

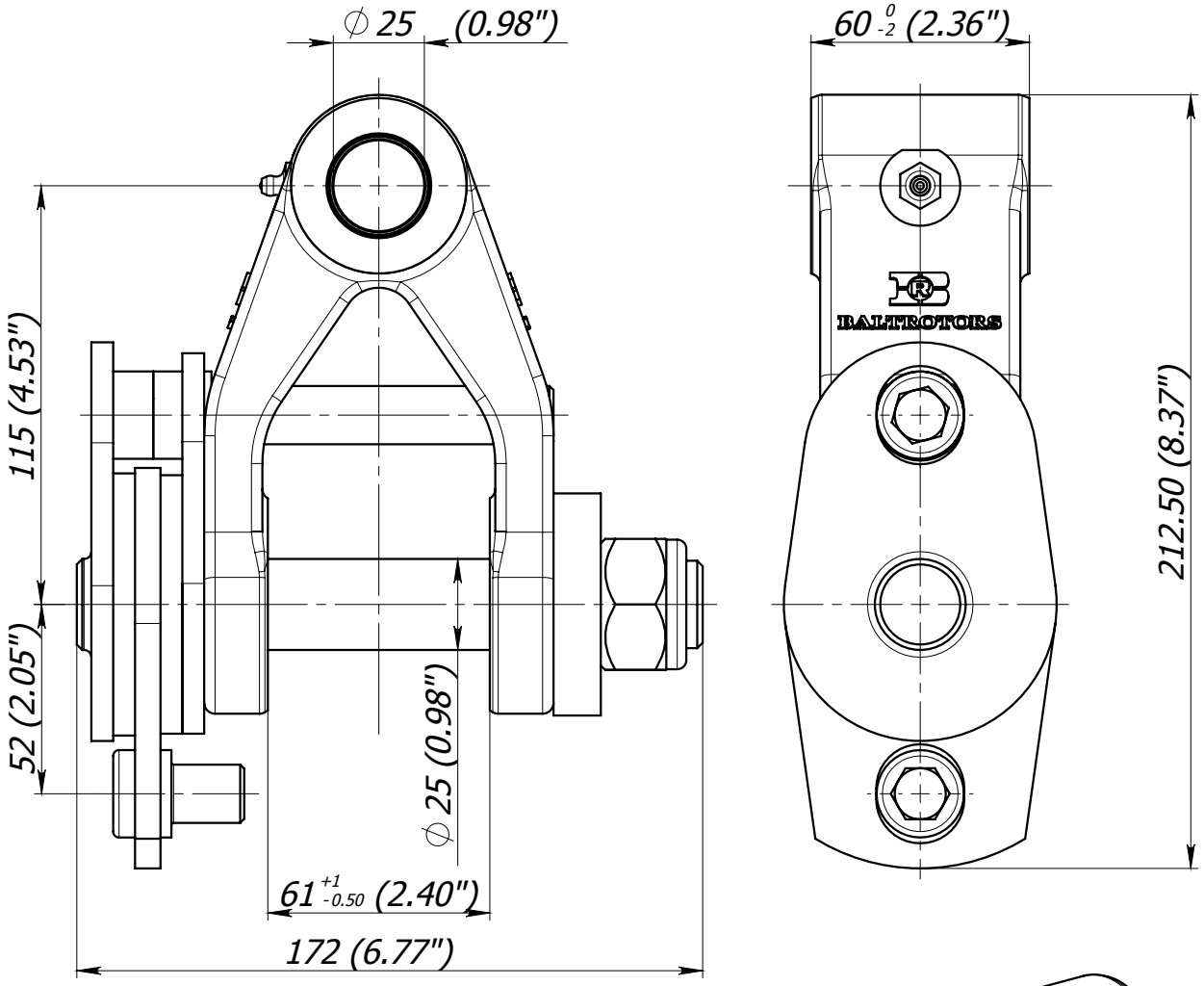

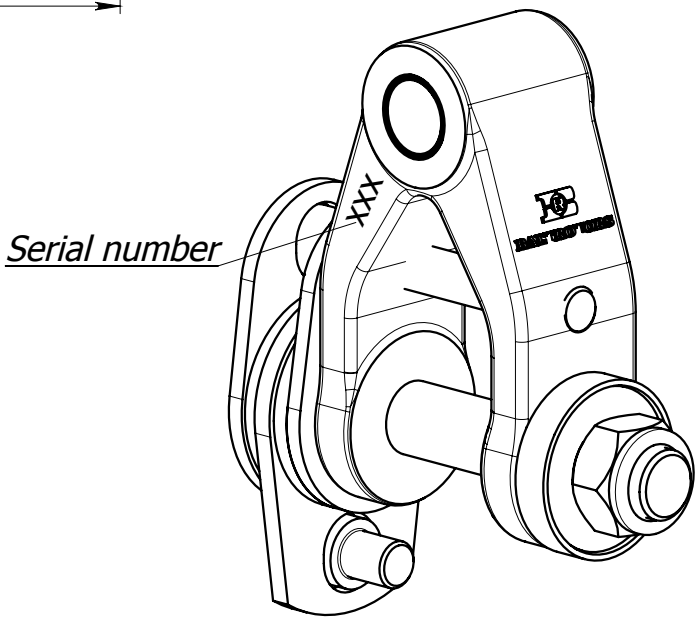

* Pin locking nut is tightened with a torque of 60 - 160 Nm (45 - 120 lb ft) dependent on desired brake power.
* Weight - 4.73 kg (10.42 lb)
* Fill grease Starplex EP 2, through lubricating nipple (pos. 12), until it will appear to the external surfaces. Greasing must be repeated after every 8 working hours of the link.

2007.10.18.

BALTROTORS

Instituta Street - 1, Salaspils. Riga region, LATVIA LV-2169
Phone: +(371) 67 981074, Fax: +(371) 67 981075
E-mail: baltrotors@baltrotors.lv

LINK BRM 10-63

List of parts

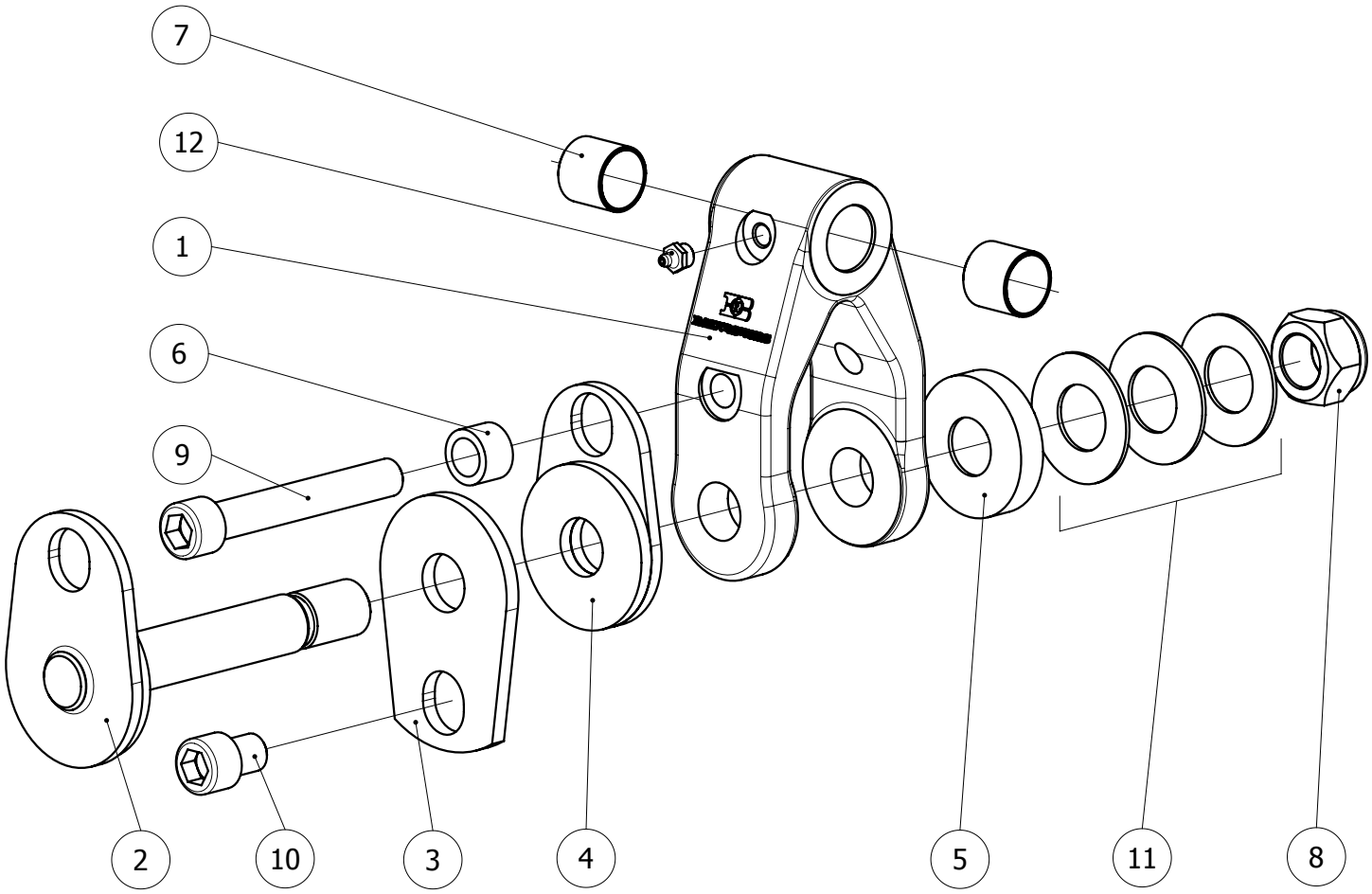

Pos.	Part No.	Description	Quantity
1	BRM 10-60.001	Link	1
2	BRM 10-60.01	Pin with brake	1
3	BR 10.001	Plate	1
4	BRM 10-60.02	Plate with brake	1
5	BR 10.004-01	Washer	1
6	BR 10.002	Washer	1
7	WB 800 2525	Bronze bushing	2
8	M24x1.5	Nut	1
9	MC6S 12.9 M16x110	Screw	1
10	MC6S 12.9 M16x20	Screw	1
11	Cat. no. 4362	Disc spring	3
12	1.2.C6	Grease nipple	1

2007.10.18.

BALTROTORS

Instituta Street - 1, Salaspils. Riga region, LATVIA LV-2169
Phone: +(371) 67 981074, Fax: +(371) 67 981075
E-mail: baltrotors@baltrotors.lv

LINK BRM 10-73

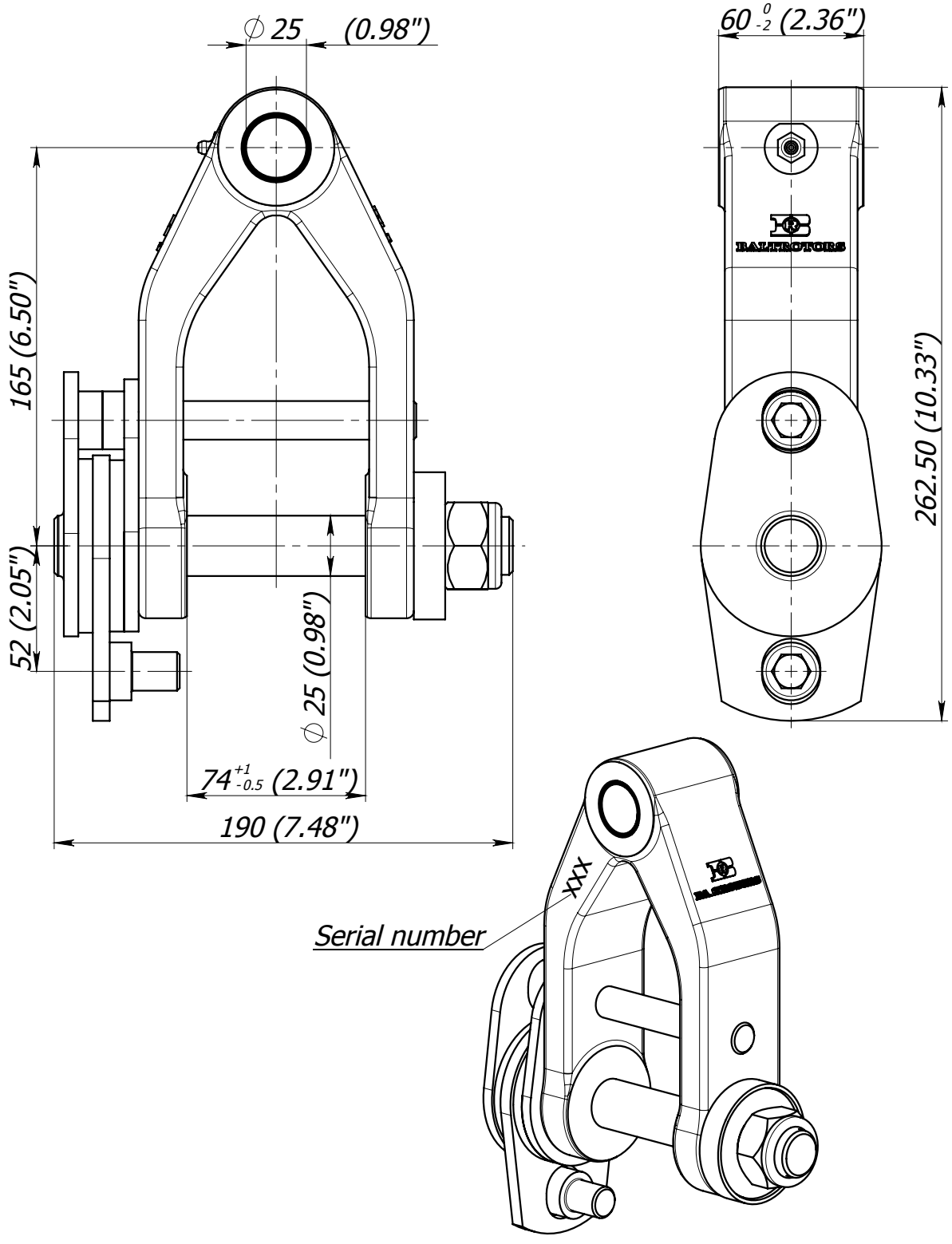

** Pin locking nut is tightened with a torque of 60 - 160 Nm (45 - 120 lb ft) dependent on desired brake power.*
** Weight - 4.73 kg (10.42 lb)*
** Fill grease Starplex EP 2, through lubricating nipple (pos. 12), until it will appearto the external surfaces. Greasing must be repeated after every 8 working hours of the link.*

2007.10.18.

BALTROTORS
Instituta Street - 1, Salaspils. Riga region, LATVIA LV-2169
Phone: +(371) 67 981074, Fax: +(371) 67 981075
E-mail: baltrotors@baltrotors.lv

LINK BRM 10-73

List of part

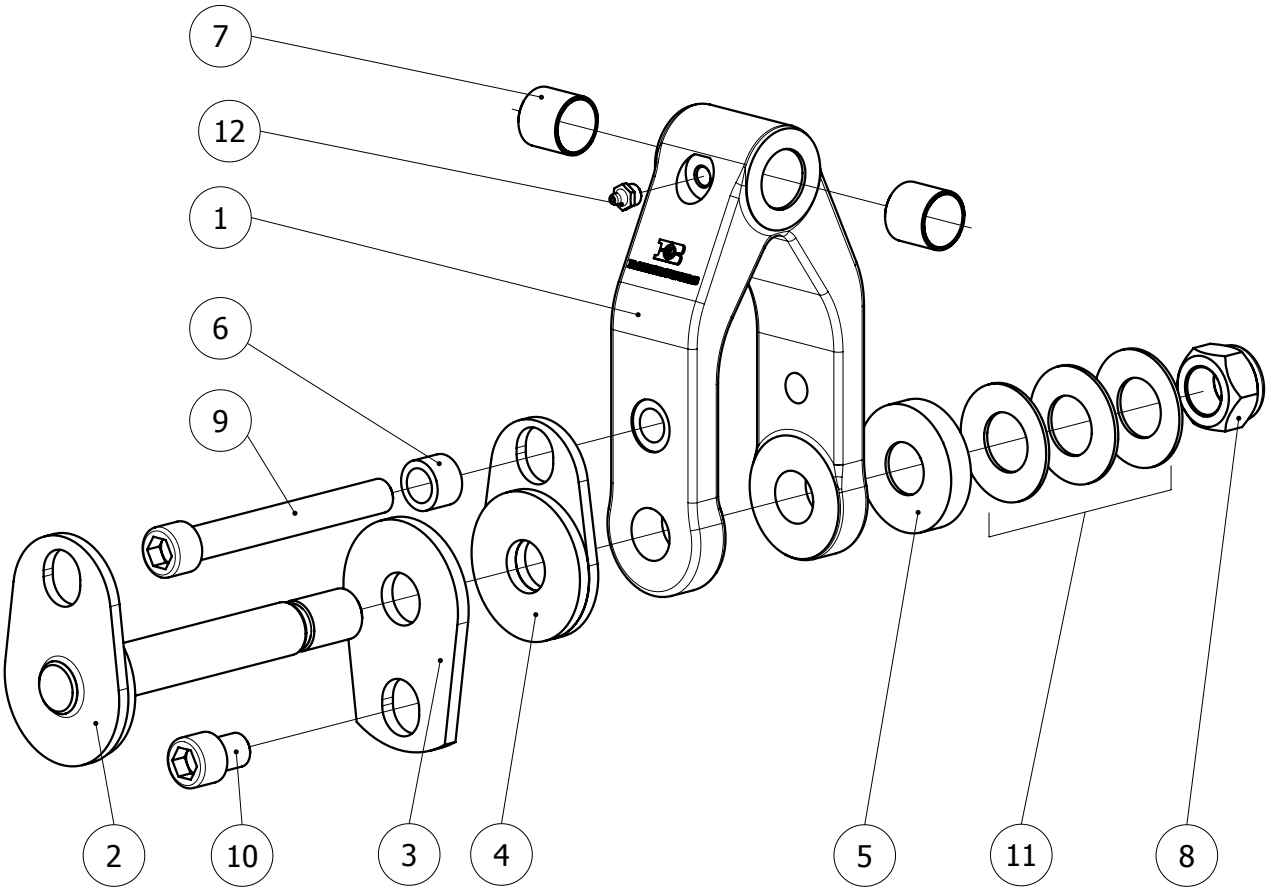

Pos.	Part No.	Description	Quantity
1	BRM 10-73.001	Link	1
2	BRM 10-73.01	Pin with brake	1
3	BR 10.001	Plate	1
4	BRM 10-60.02	Plate with brake	1
5	BR 10.004-01	Washer	1
6	BR 10.002	Washer	1
7	WB 800 2525	Bronze bushing	2
8	M24x1.5	Nut	1
9	MC6S 12.9 M16x130	Screw	1
10	MC6S 12.9 M16x20	Screw	1
11	Cat. no. 4362	Disc spring	3
12	1.2.C6	Grease nipple	1

BALTROTORS
Instituta Street - 1, Salaspils. Riga region, LATVIA LV-2169
Phone: +(371) 67 981074, Fax: +(371) 67 981075
E-mail: baltrotors@baltrotors.lv

LINK BR 1

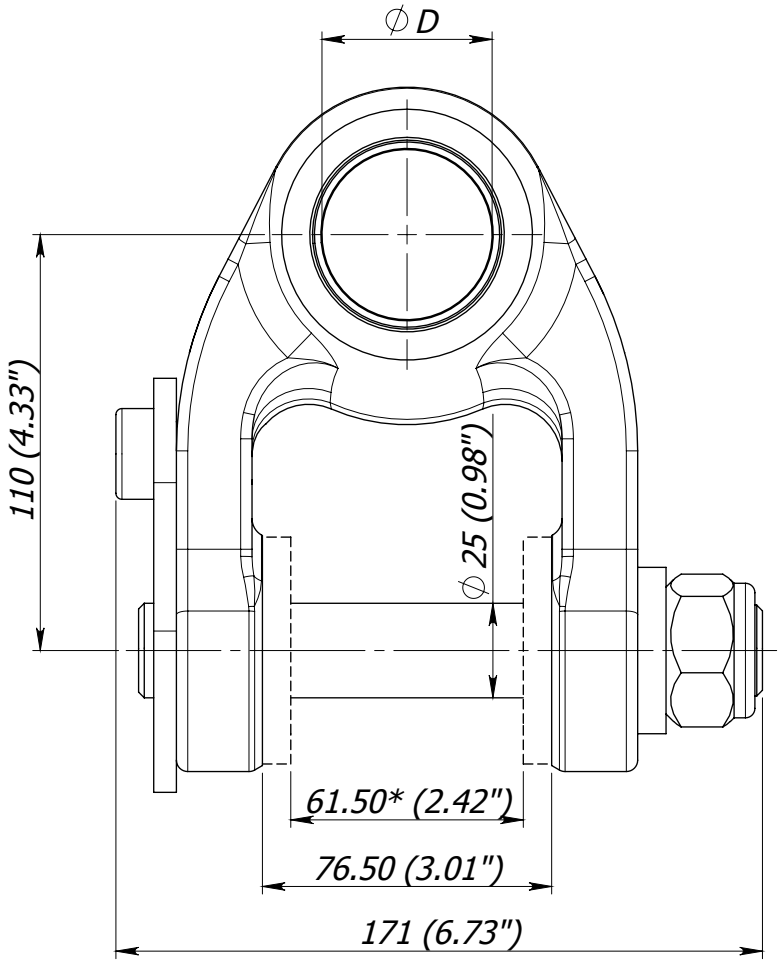

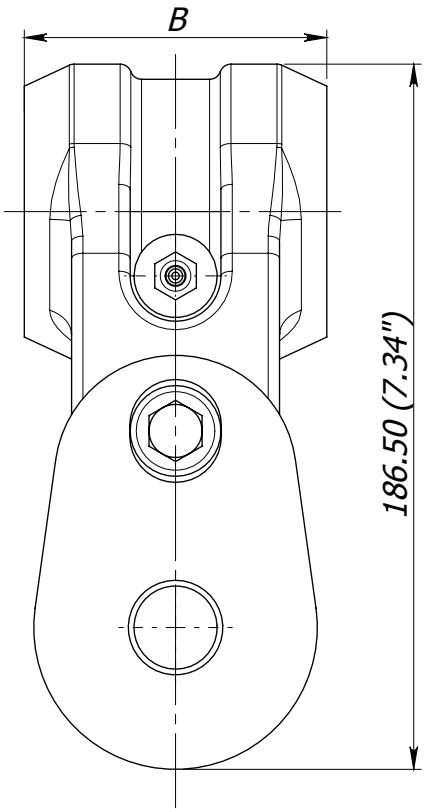

**** Only by request for rotator GR 30***

Dimensions			
Crane nose pivot pin diameter ∅D (mm)	Link width B (mm)		
	$80^{0}_{-0.3}$ (3.15")	$70^{0}_{-0.3}$ (2.76")	$60^{0}_{-0.3}$ (2.36")
45 (1.77")	BR 1/80/45	BR 1/70/45	BR 1/60/45
40 (1.57")	BR 1/80/40	BR 1/70/40	BR 1/60/40
35 (1.38")	BR 1/80/35	BR 1/70/35	BR 1/60/35
30 (1.18")	BR 1/80/30	BR 1/70/30	BR 1/60/30
25 (0.98")	BR 1/80/25	BR 1/70/25	BR 1/60/25
20 (0.79")	BR 1/80/20	BR 1/70/20	BR 1/60/20

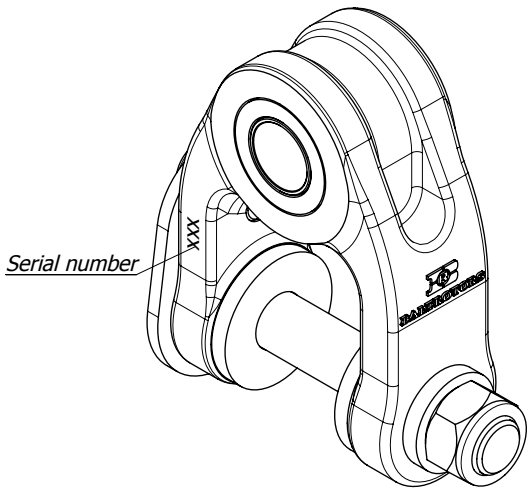

- *Pin locking nut is tightened with a torque of 120 Nm (89 lb ft)*
- *Weight - 5.5±1 kg (12.12±2.20 lb)*
- *Fill grease Starplex EP 2, through lubricating nipple (pos. 9), until it will appear to the external surfaces. Greasing must be repeated after every 8 working hours of the link.*

BALTROTORS
Instituta Street - 1, Salaspils. Riga region, LATVIA LV-2169
Phone: +(371) 67 981074, Fax: +(371) 67 981075
E-mail: baltrotors@baltrotors.lv

LINK BR 1

List of parts

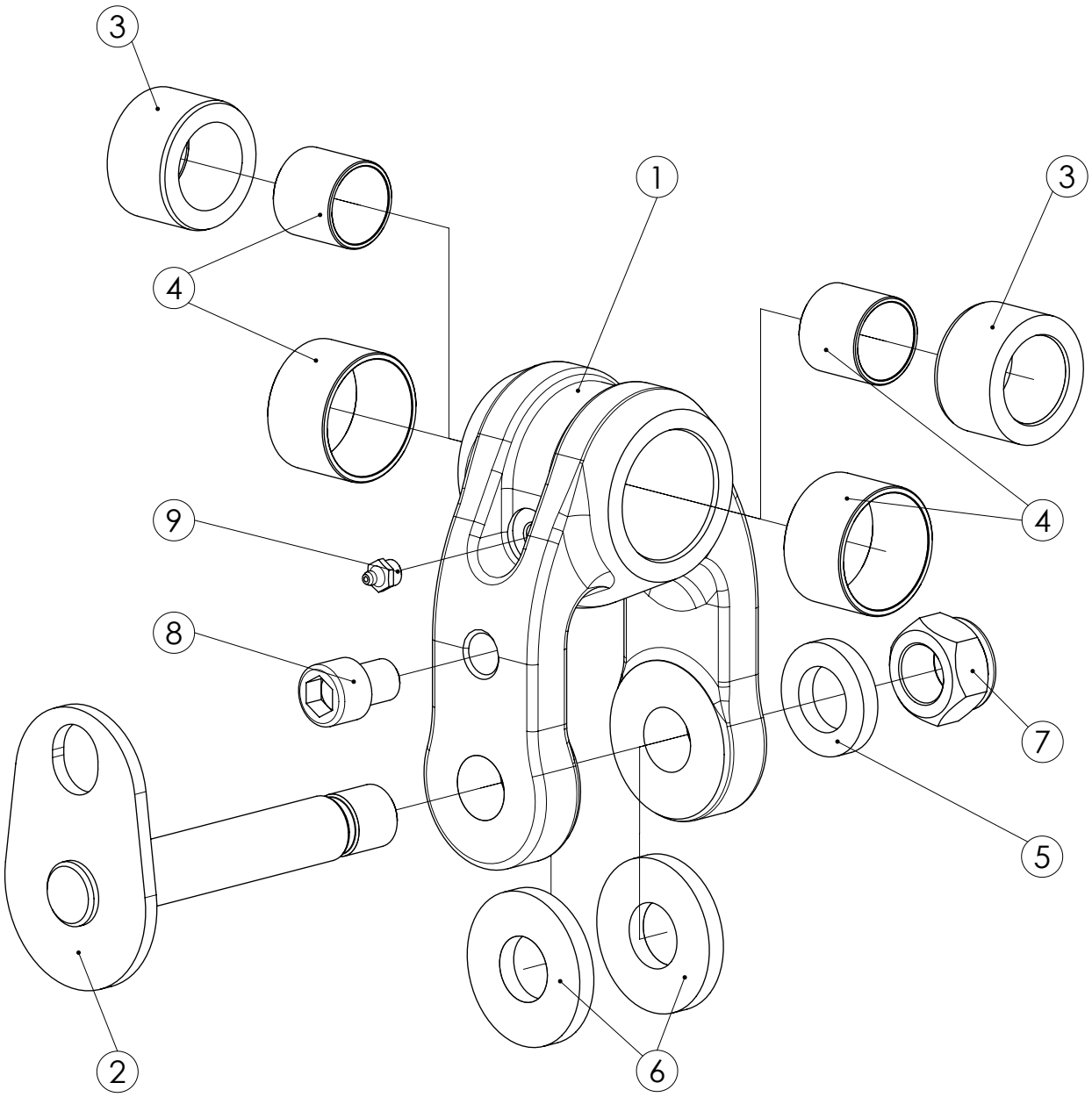

Washer (pos. 6) only by request for rotator GR 30.

BALTROTORS
Instituta Street - 1, Salaspils. Riga region, LATVIA LV-2169
Phone: +(371) 67 981074, Fax: +(371) 67 981075
E-mail: baltrotors@baltrotors.lv

LINK BR 1

List of parts

Pos.	Part No.	Description	BR 1/80/45	BR 1/80/40	BR 1/80/35	BR 1/80/30	BR 1/80/25	BR 1/80/20	BR 1/70/45	BR 1/70/40	BR 1/70/35	BR 1/70/30	BR 1/70/25	BR 1/70/20	BR 1/60/45	BR 1/60/40	BR 1/60/35	BR 1/60/30	BR 1/60/25	BR 1/60/20	Notes
1	BR1.001-80	Link	1	1	1	1	1	1	-	-	-	-	-	-	-	-	-	-	-	-	
	BR1.001-70		-	-	-	-	-	-	1	1	1	1	1	1	-	-	-	-	-	-	
	BR1.001-60		-	-	-	-	-	-	-	-	-	-	-	-	1	1	1	1	1	1	
2	BR 1.01	Pin	1	1	1	1	1	1	1	1	1	1	1	1	1	1	1	1	1	1	
3	BR 1.02.001/70/40	Bushing	-	2	-	-	-	-	-	2	-	-	-	-	-	-	-	-	-	-	
	BR 1.02.001/70/35		-	-	2	-	-	-	-	-	2	-	-	-	-	-	-	-	-	-	
	BR 1.02.001/70/30		-	-	-	2	-	-	-	-	-	2	-	-	-	-	-	-	-	-	
	BR 1.02.001/70/25		-	-	-	-	2	-	-	-	-	-	2	-	-	-	-	-	-	-	
	BR 1.02.001/70/20		-	-	-	-	-	2	-	-	-	-	-	2	-	-	-	-	-	-	
	BR 1.02.001/60/40		-	-	-	-	-	-	-	-	-	-	-	-	-	2	-	-	-	-	
	BR 1.02.001/60/35		-	-	-	-	-	-	-	-	-	-	-	-	-	-	2	-	-	-	
	BR 1.02.001/60/30		-	-	-	-	-	-	-	-	-	-	-	-	-	-	-	2	-	-	
	BR 1.02.001/60/25		-	-	-	-	-	-	-	-	-	-	-	-	-	-	-	-	2	-	
	BR 1.02.001/60/20		-	-	-	-	-	-	-	-	-	-	-	-	-	-	-	-	-	2	
4	WB 800 4530	Bronze bushing	2	-	-	-	-	-	2	-	-	-	-	-	-	-	-	-	-	-	
	WB 800 4030		-	2	-	-	-	-	-	2	-	-	-	-	-	-	-	-	-	-	
	WB 800 3530		-	-	2	-	-	-	-	-	2	-	-	-	-	-	-	-	-	-	
	WB 800 3030		-	-	-	2	-	-	-	-	-	2	-	-	-	-	-	-	-	-	
	WB 800 2530		-	-	-	-	2	-	-	-	-	-	2	-	-	-	-	-	-	-	
	WB 800 2020		-	-	-	-	-	2	-	-	-	-	-	2	-	-	-	-	-	2	
	BR 1.02.002/60/45		-	-	-	-	-	-	-	-	-	-	-	-	2	-	-	-	-	-	
	BR 1.02.002/60/40		-	-	-	-	-	-	-	-	-	-	-	-	-	2	-	-	-	-	
	BR 1.02.002/60/35		-	-	-	-	-	-	-	-	-	-	-	-	-	-	2	-	-	-	
	BR 1.02.002/60/30		-	-	-	-	-	-	-	-	-	-	-	-	-	-	-	2	-	-	
	BR 1.02.002/60/25		-	-	-	-	-	-	-	-	-	-	-	-	-	-	-	-	2	-	
5	BR 1.003	Washer	1	1	1	1	1	1	1	1	1	1	1	1	1	1	1	1	1	1	
6	BR 1.003 P	Washer	2	2	2	2	2	2	2	2	2	2	2	2	2	2	2	2	2	2	Only for GR 30
7	M24x1.5	Nut	1	1	1	1	1	1	1	1	1	1	1	1	1	1	1	1	1	1	
8	MC6S 12.9 M16x20	Screw	1	1	1	1	1	1	1	1	1	1	1	1	1	1	1	1	1	1	
9	1.2.C6	Grease nipple	1	1	1	1	1	1	1	1	1	1	1	1	1	1	1	1	1	1	

2007.10.05.

BALTROTORS

Instituta Street - 1, Salaspils. Riga region, LATVIA LV-2169
Phone: +(371) 67 981074, Fax: +(371) 67 981075
E-mail: baltrotors@baltrotors.lv

LINK BR 1-A

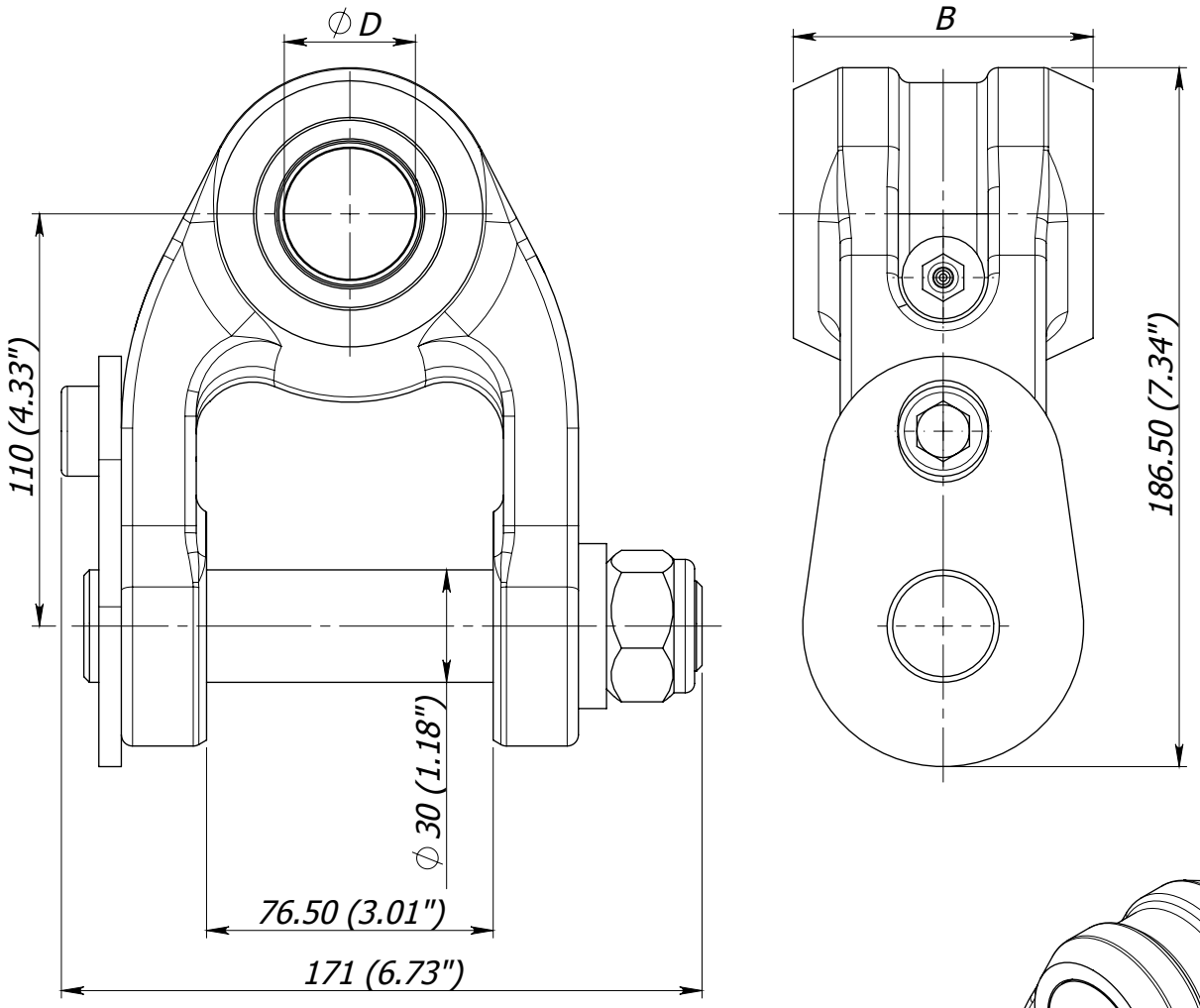

Dimensions			
Crane nose pivot pin diameter ∅D (mm)	Link width B (mm)		
	$80^{0}_{-0.3}$ (3.15")	$70^{0}_{-0.3}$ (2.76")	$60^{0}_{-0.3}$ (2.36")
45 (1.77")	BR 1-A/80/45	BR 1-A/70/45	BR 1-A/60/45
40 (1.57")	BR 1-A/80/40	BR 1-A/70/40	BR 1-A/60/40
35 (1.38")	BR 1-A/80/35	BR 1-A/70/35	BR 1-A/60/35
30 (1.18")	BR 1-A/80/30	BR 1-A/70/30	BR 1-A/60/30
25 (0.98")	BR 1-A/80/25	BR 1-A/70/25	BR 1-A/60/25
20 (0.79")	BR 1-A/80/20	BR 1-A/70/20	BR 1-A/60/20

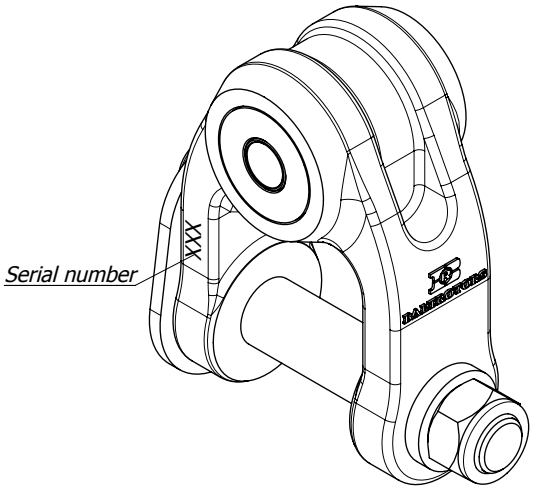

- *Pin locking nut is tightened with a torque of 120 Nm (89 lb ft)*
- *Weight - 5.5±1 kg (12.12±2.20 lb)*
- *Fill grease Starplex EP 2, through lubricating nipple (pos. 8), until it will appear to the external surfaces. Greasing must be repeated after every 8 working hours of the link.*

2007.10.05.

BALTROTORS

Instituta Street - 1, Salaspils. Riga region, LATVIA LV-2169
Phone: +(371) 67 981074, Fax: +(371) 67 981075
E-mail: baltrotors@baltrotors.lv

LINK BR 1-A

List of parts

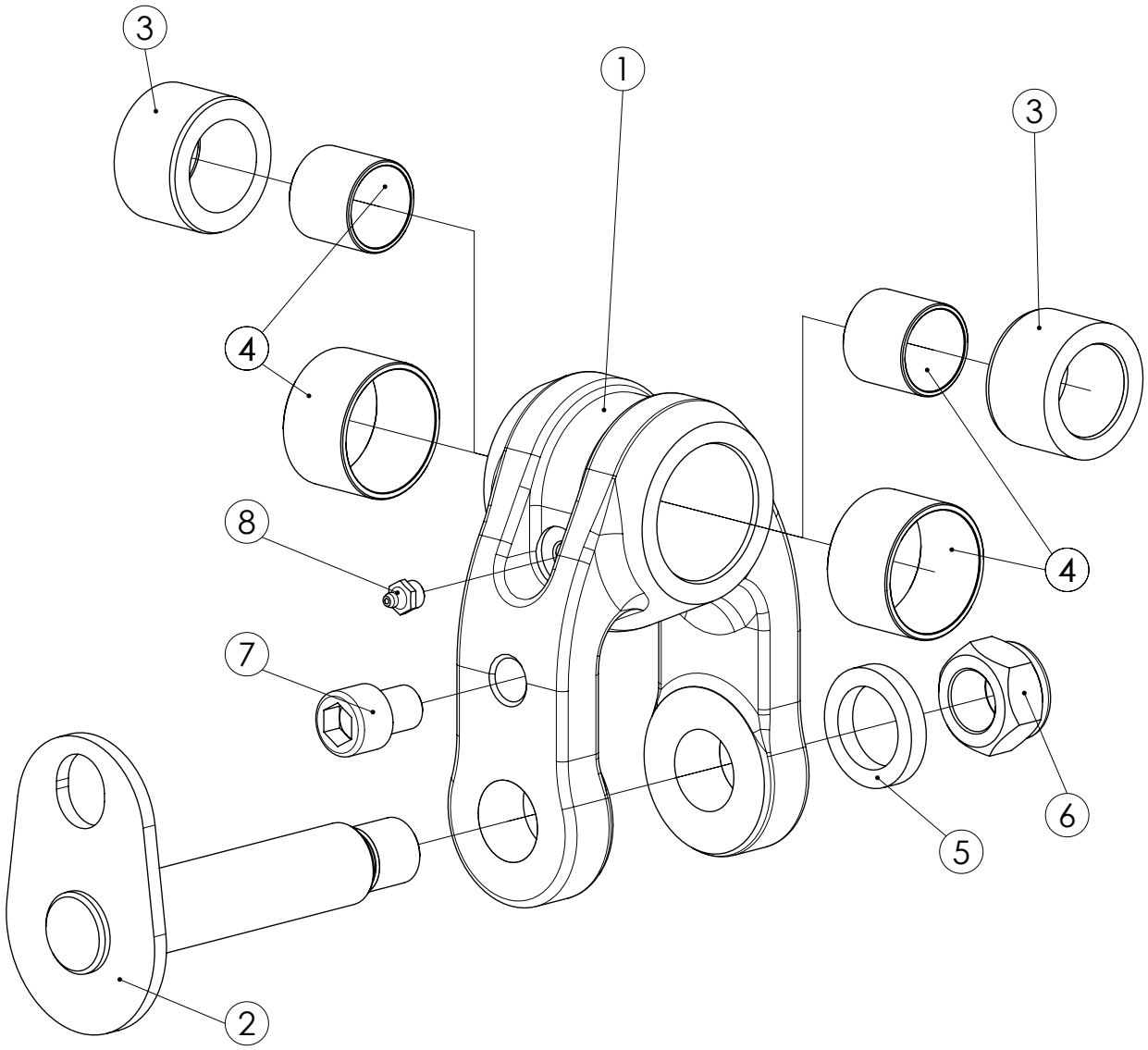

BALTROTORS

Instituta Street - 1, Salaspils. Riga region, LATVIA LV-2169
Phone: +(371) 67 981074, Fax: +(371) 67 981075
E-mail: baltrotors@baltrotors.lv

LINK BR 1-A

List of parts

Pos.	Part No.	Description	BR 1-A/80/45	BR 1-A/80/40	BR 1-A/80/35	BR 1-A/80/30	BR 1-A/80/25	BR 1-A/80/20	BR 1-A/70/45	BR 1-A/70/40	BR 1-A/70/35	BR 1-A/70/30	BR 1-A/70/25	BR 1-A/70/20	BR 1-A/60/45	BR 1-A/60/40	BR 1-A/60/35	BR 1-A/60/30	BR 1-A/60/25	BR 1-A/60/20	Notes
1	BR1-A.001-80	Link	1	1	1	1	1	1	-	-	-	-	-	-	-	-	-	-	-	-	
	BR1-A.001-70		-	-	-	-	-	-	1	1	1	1	1	1	-	-	-	-	-	-	
	BR1-A.001-60		-	-	-	-	-	-	-	-	-	-	-	-	1	1	1	1	1	1	
2	BR 1-A.01	Pin	1	1	1	1	1	1	1	1	1	1	1	1	1	1	1	1	1	1	
3	BR 1.02.001/70/40	Bushing	-	2	-	-	-	-	-	2	-	-	-	-	-	-	-	-	-	-	
	BR 1.02.001/70/35		-	-	2	-	-	-	-	-	2	-	-	-	-	-	-	-	-	-	
	BR 1.02.001/70/30		-	-	-	2	-	-	-	-	-	2	-	-	-	-	-	-	-	-	
	BR 1.02.001/70/25		-	-	-	-	2	-	-	-	-	-	2	-	-	-	-	-	-	-	
	BR 1.02.001/70/20		-	-	-	-	-	2	-	-	-	-	-	2	-	-	-	-	-	-	
	BR 1.02.001/60/40		-	-	-	-	-	-	-	-	-	-	-	-	-	2	-	-	-	-	
	BR 1.02.001/60/35		-	-	-	-	-	-	-	-	-	-	-	-	-	-	2	-	-	-	
	BR 1.02.001/60/30		-	-	-	-	-	-	-	-	-	-	-	-	-	-	-	2	-	-	
	BR 1.02.001/60/25		-	-	-	-	-	-	-	-	-	-	-	-	-	-	-	-	2	-	
	BR 1.02.001/60/20		-	-	-	-	-	-	-	-	-	-	-	-	-	-	-	-	-	2	
4	WB 800 4530	Bronze bushing	2	-	-	-	-	-	2	-	-	-	-	-	-	-	-	-	-	-	
	WB 800 4030		-	2	-	-	-	-	-	2	-	-	-	-	-	-	-	-	-	-	
	WB 800 3530		-	-	2	-	-	-	-	-	2	-	-	-	-	-	-	-	-	-	
	WB 800 3030		-	-	-	2	-	-	-	-	-	2	-	-	-	-	-	-	-	-	
	WB 800 2530		-	-	-	-	2	-	-	-	-	-	2	-	-	-	-	-	-	-	
	WB 800 2020		-	-	-	-	-	2	-	-	-	-	-	2	-	-	-	-	-	2	
	BR 1.02.002/60/45		-	-	-	-	-	-	-	-	-	-	-	-	2	-	-	-	-	-	
	BR 1.02.002/60/40		-	-	-	-	-	-	-	-	-	-	-	-	-	2	-	-	-	-	
	BR 1.02.002/60/35		-	-	-	-	-	-	-	-	-	-	-	-	-	-	2	-	-	-	
	BR 1.02.002/60/30		-	-	-	-	-	-	-	-	-	-	-	-	-	-	-	2	-	-	
	BR 1.02.002/60/25		-	-	-	-	-	-	-	-	-	-	-	-	-	-	-	-	2	-	
5	BR 1-A.003	Washer	1	1	1	1	1	1	1	1	1	1	1	1	1	1	1	1	1	1	
6	M24x1.5	Nut	1	1	1	1	1	1	1	1	1	1	1	1	1	1	1	1	1	1	
7	MC6S 12.9 M16x20	Screw	1	1	1	1	1	1	1	1	1	1	1	1	1	1	1	1	1	1	
8	1.2.C6	Grease nipple	1	1	1	1	1	1	1	1	1	1	1	1	1	1	1	1	1	1	

2007.10.05.

BALTROTORS

Instituta Street - 1, Salaspils. Riga region, LATVIA LV-2169
Phone: +(371) 67 981074, Fax: +(371) 67 981075
E-mail: baltrotors@baltrotors.lv

LINK BR 2

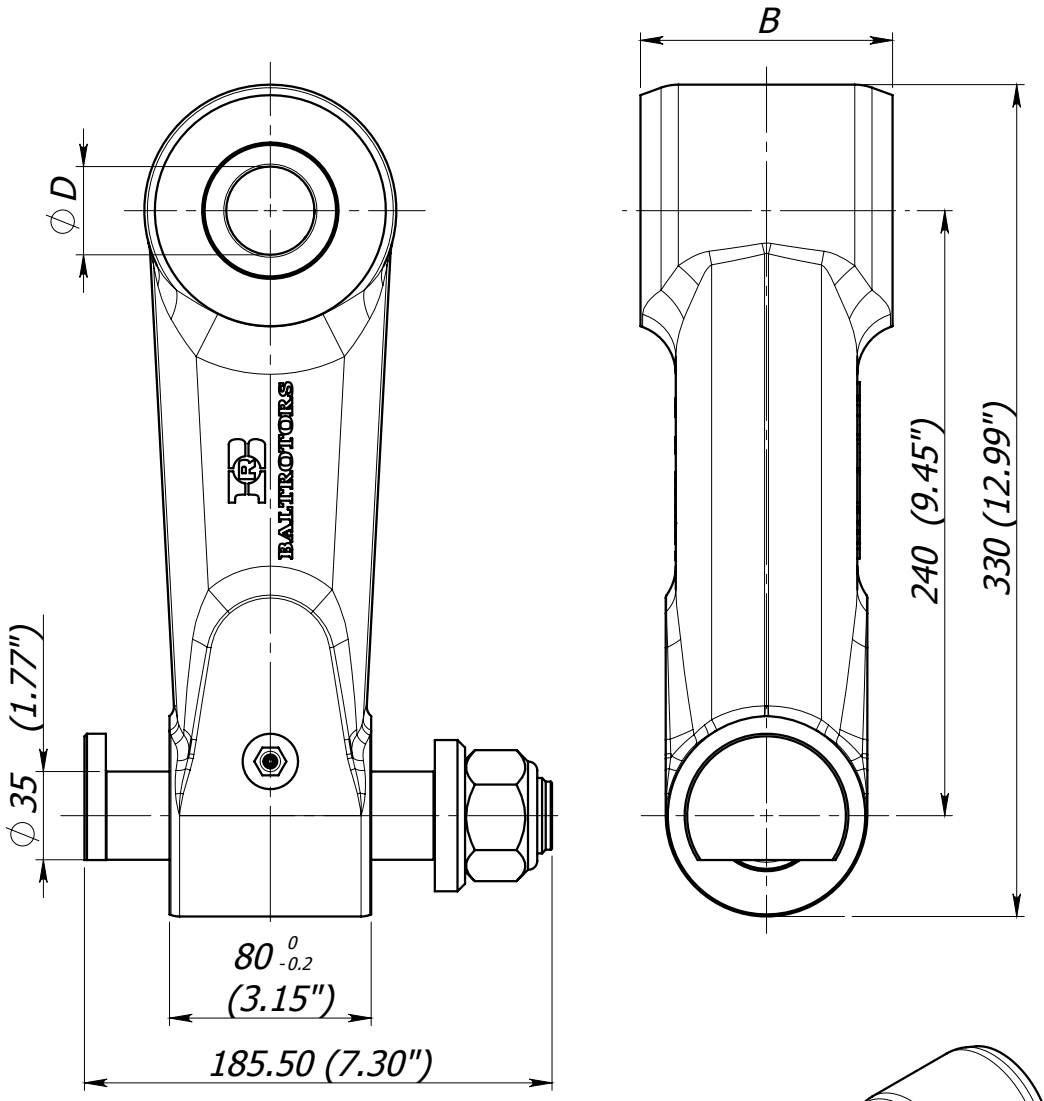

Dimensions		
Crane nose pivot pin diameter ∅D (mm)	Link width B (mm)	
	80 0 -0.2 (3.15")	100 0 -0.2 (3.94")
45 (1.77")	BR 2/45	BR 2-100/45
40 (1.57")	BR 2/40	BR 2-100/40
35 (1.38")	BR 2/35	BR 2-100/35
30 (1.18")	BR 2/30	-

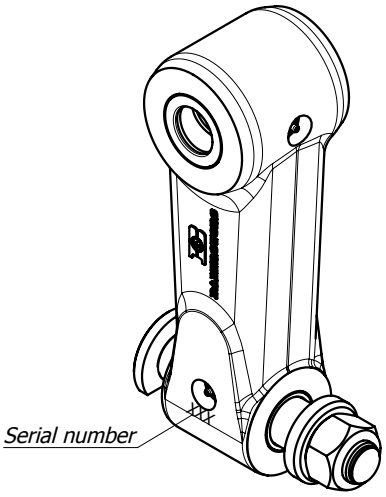

** Pin locking nut is tightened with a torque of 120 Nm (89 lb ft)*
** Weight - 16.5±1 kg (36.37±2.20 lb)*
** Fill grease Starplex EP 2, through lubricating nipple (pos. 7), until it will appear to the external surfaces. Greasing must be repeated after every 8 working hours of the link.*

BALTROTORS
Instituta Street - 1, Salaspils. Riga region, LATVIA LV-2169
Phone: +(371) 67 981074, Fax: +(371) 67 981075
E-mail: baltrotors@baltrotors.lv

LINK BR 2

List of parts

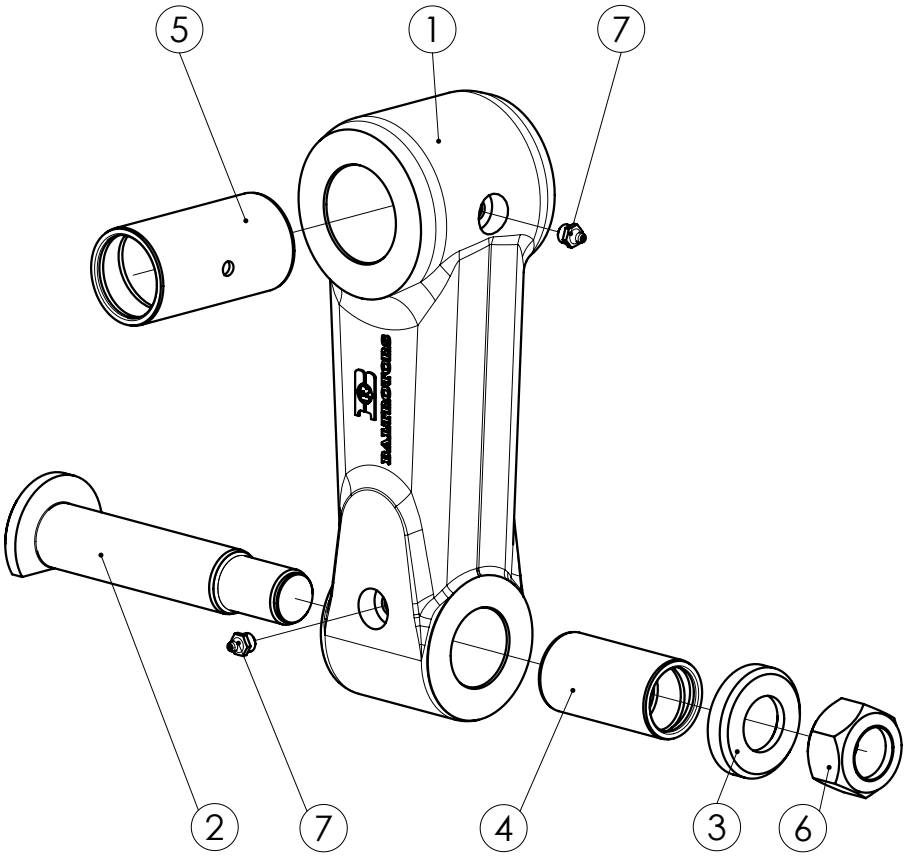

Pos.	Part No.	Description	BR 2/45	BR 2/40	BR 2/35	BR 2/30	BR 2-100/45	BR 2-100/40	BR 2-100/35
1	BR 2.001-01	Link	1	1	1	1	-	-	-
	BR 2-100.001		-	-	-	-	1	1	1
2	BR 2.002	Pin	1	1	1	1	1	1	1
3	BR 2.003	Washer	1	1	1	1	1	1	1
4	BR 2.004-04	Steel bushing	1	1	1	1	1	1	1
5	BR 2.004-03	Steel bushing	1	-	-	-	-	-	-
	BR 2.004-02		-	1	-	-	-	-	-
	BR 2.004-01		-	-	1	-	-	-	-
	BR 2.004		-	-	-	1	-	-	-
	BR 3.004-02		-	-	-	-	1	-	-
	BR 3.004-01		-	-	-	-	-	1	-
	BR 3.004		-	-	-	-	-	-	1
6	M30x1.5	Nut	1	1	1	1	1	1	1
7	1.2.C6	Grease nipple	2	2	2	2	2	2	2

2007.10.17.

BALTROTORS

Instituta Street - 1, Salaspils. Riga region, LATVIA LV-2169
Phone: +(371) 67 981074, Fax: +(371) 67 981075
E-mail: baltrotors@baltrotors.lv

LINK BR 2 C

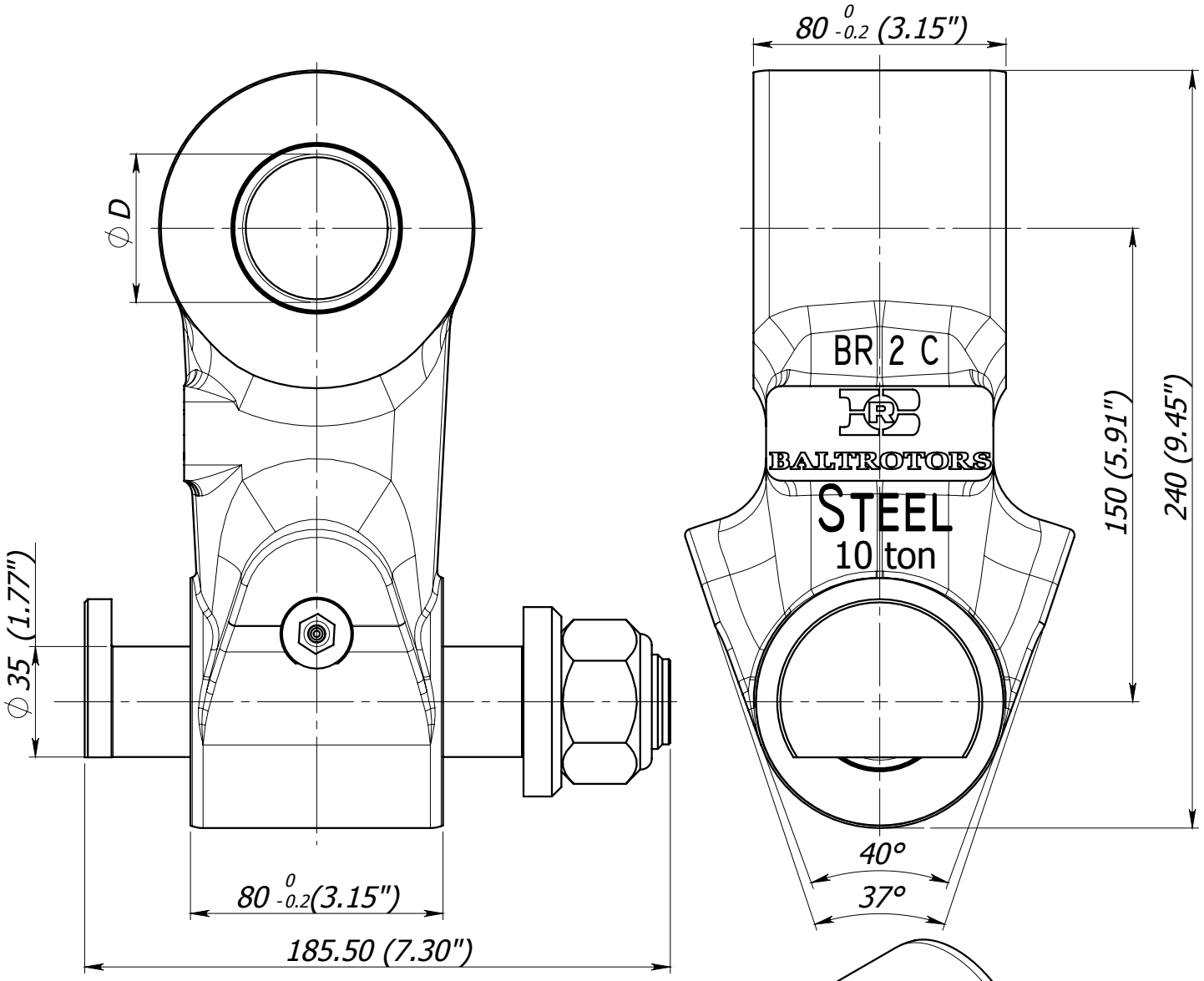

Crane nose pivot pin diameter ØD (mm)	Link
45 (1.77")	BR 2 C/45
40 (1.57")	BR 2 C/40
35 (1.38")	BR 2 C/35
30 (1.18")	BR 2 C/30
25 (0.98")	BR 2 C/25

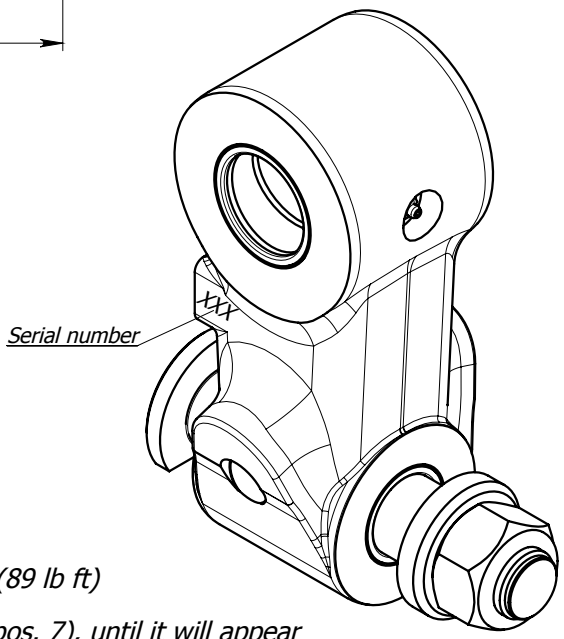

** Pin locking nut is tightened with a torque of 120 Nm (89 lb ft)*
** Weight - 12.5±0.5 kg (27.55±1.10 lb)*
** Fill grease Starplex EP 2, through lubricating nipple (pos. 7), until it will appear to the external surfaces. Greasing must be repeated after every 8 working hours of the link.*

2007.10.05. Sheet 1 of 2

BALTROTORS
Instituta Street - 1, Salaspils. Riga region, LATVIA LV-2169
Phone: +(371) 67 981074, Fax: +(371) 67 981075
E-mail: baltrotors@baltrotors.lv

LINK BR 2 C

List of parts

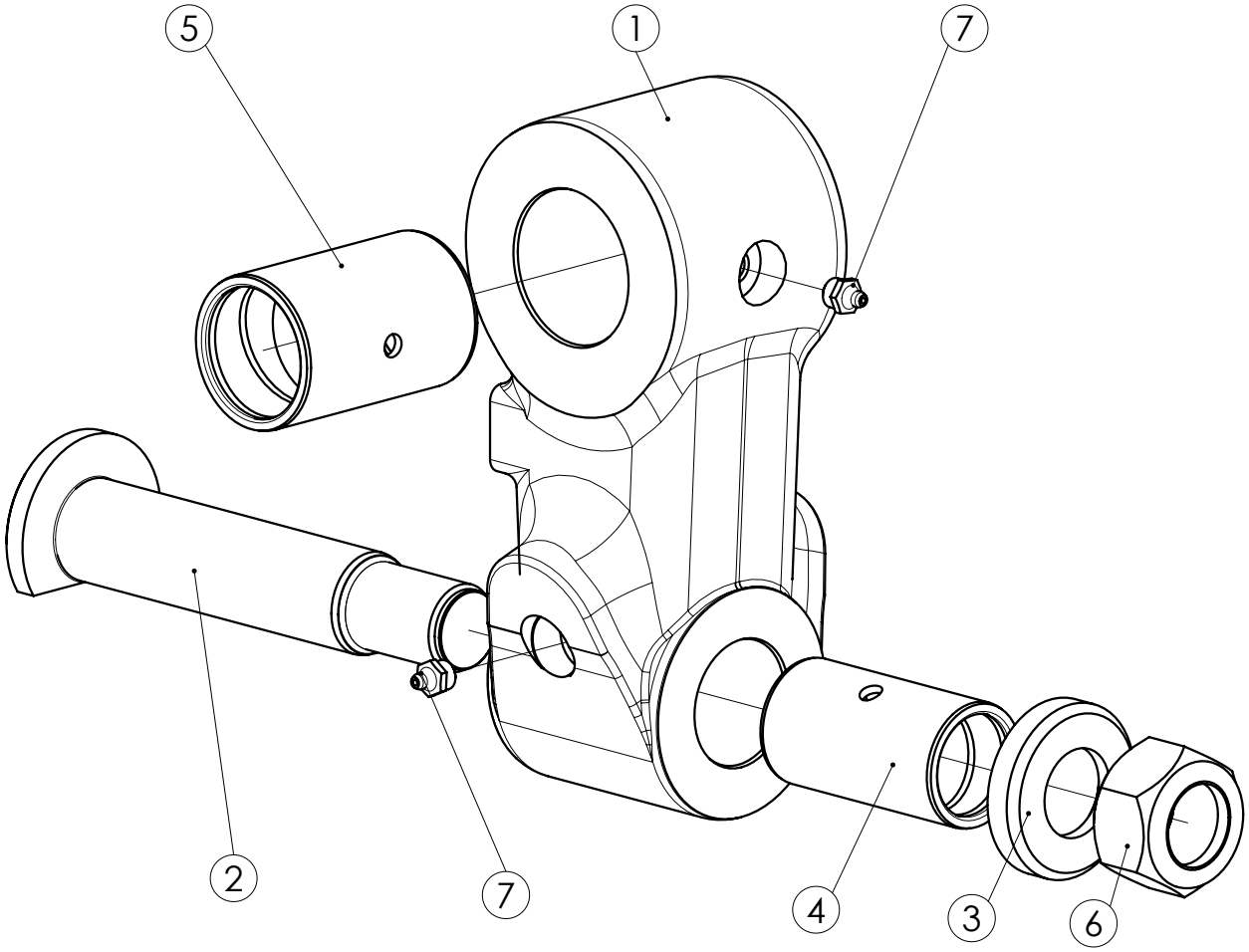

Pos.	Part No.	Description	BR 2 C/45	BR 2 C/40	BR 2 C/35	BR 2 C/30	BR 2 C/25
1	BR 2 C.001	Link	1	1	1	1	1
2	BR 2.002	Pin	1	1	1	1	1
3	BR 2.003	Washer	1	1	1	1	1
4	BR 2.004-04	Steel bushing	1	1	1	1	1
5	BR 2.004-03	Steel bushing	1	-	-	-	-
	BR 2.004-02		-	1	-	-	-
	BR 2.004-01		-	-	1	-	-
	BR 2.004		-	-	-	1	-
	BR 2.004-05		-	-	-	-	1
6	M30x1.5	Nut	1	1	1	1	1
7	1.2.C6	Grease nipple	2	2	2	2	2

BALTROTORS
Instituta Street - 1, Salaspils. Riga region, LATVIA LV-2169
Phone: +(371) 67 981074, Fax: +(371) 67 981075
E-mail: baltrotors@baltrotors.lv

LINK BR 3

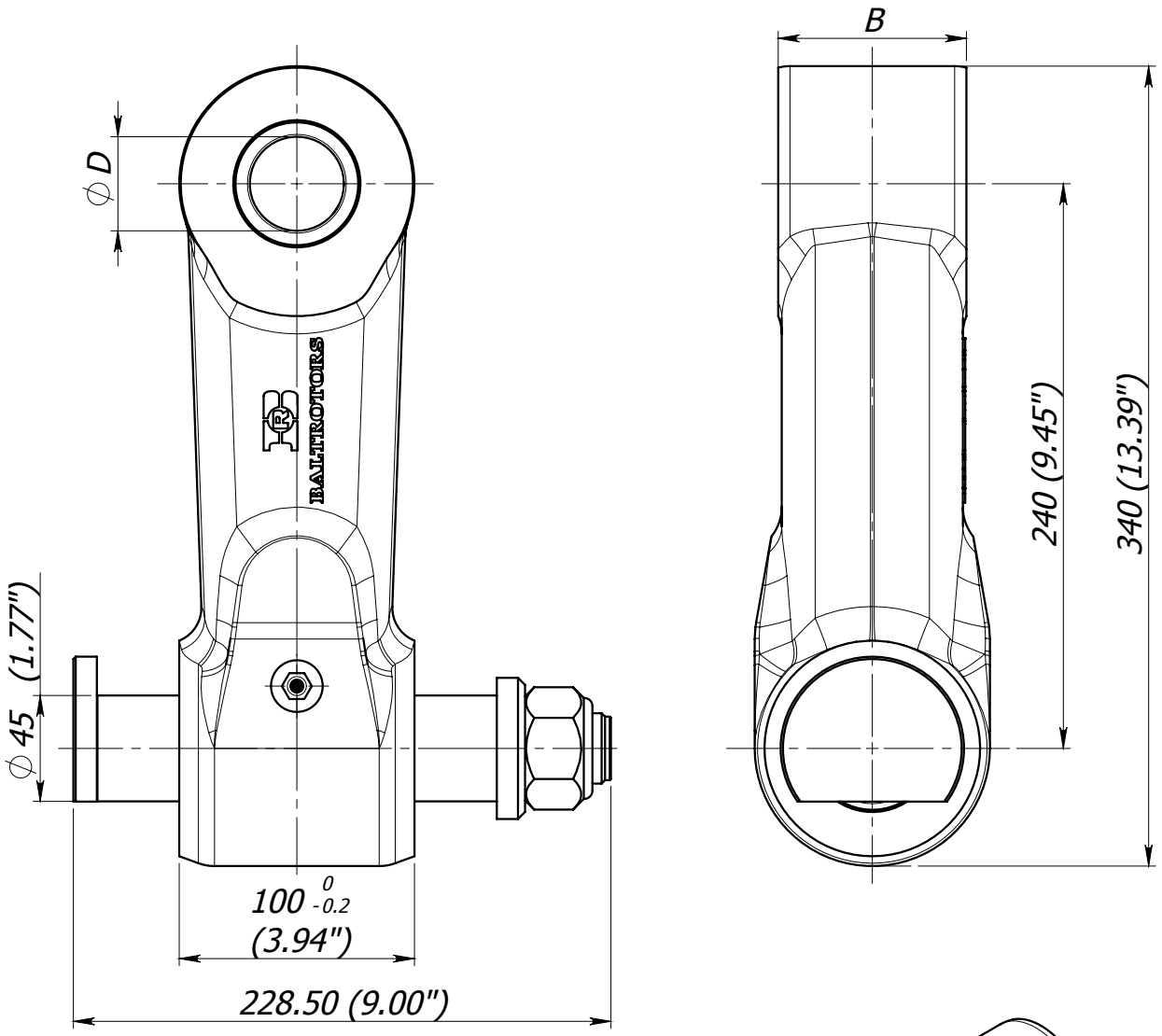

Dimensions		
Crane nose pivot pin diameter ∅D (mm)	Link width B (mm)	
	80 0 -0.2 (3.15")	100 0 -0.2 (3.94")
50 (1.97")	BR 3-80/50	BR 3/50
45 (1.77")	BR 3-80/45	BR 3/45
40 (1.57")	BR 3-80/40	BR 3/40
35 (1.38")	BR 3-80/35	BR 3/35
30 (1.18")	BR 3-80/30	-

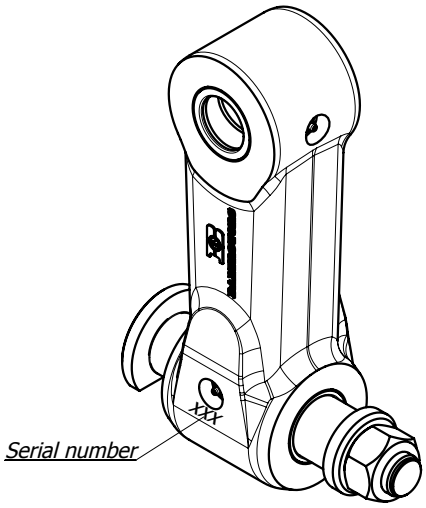

** Pin locking nut is tightened with a torque of 120 Nm (89 lb ft)*
** Weight - 20.5± 1 kg (44.09± 2.20 lb)*
** Fill grease Starplex EP 2, through lubricating nipple (pos. 7), until it will appear to the external surfaces. Greasing must be repeated after every 8 working hours of the link.*

BALTROTORS
Instituta Street - 1, Salaspils. Riga region, LATVIA LV-2169
Phone: +(371) 67 981074, Fax: +(371) 67 981075
E-mail: baltrotors@baltrotors.lv

LINK BR 3

List of parts

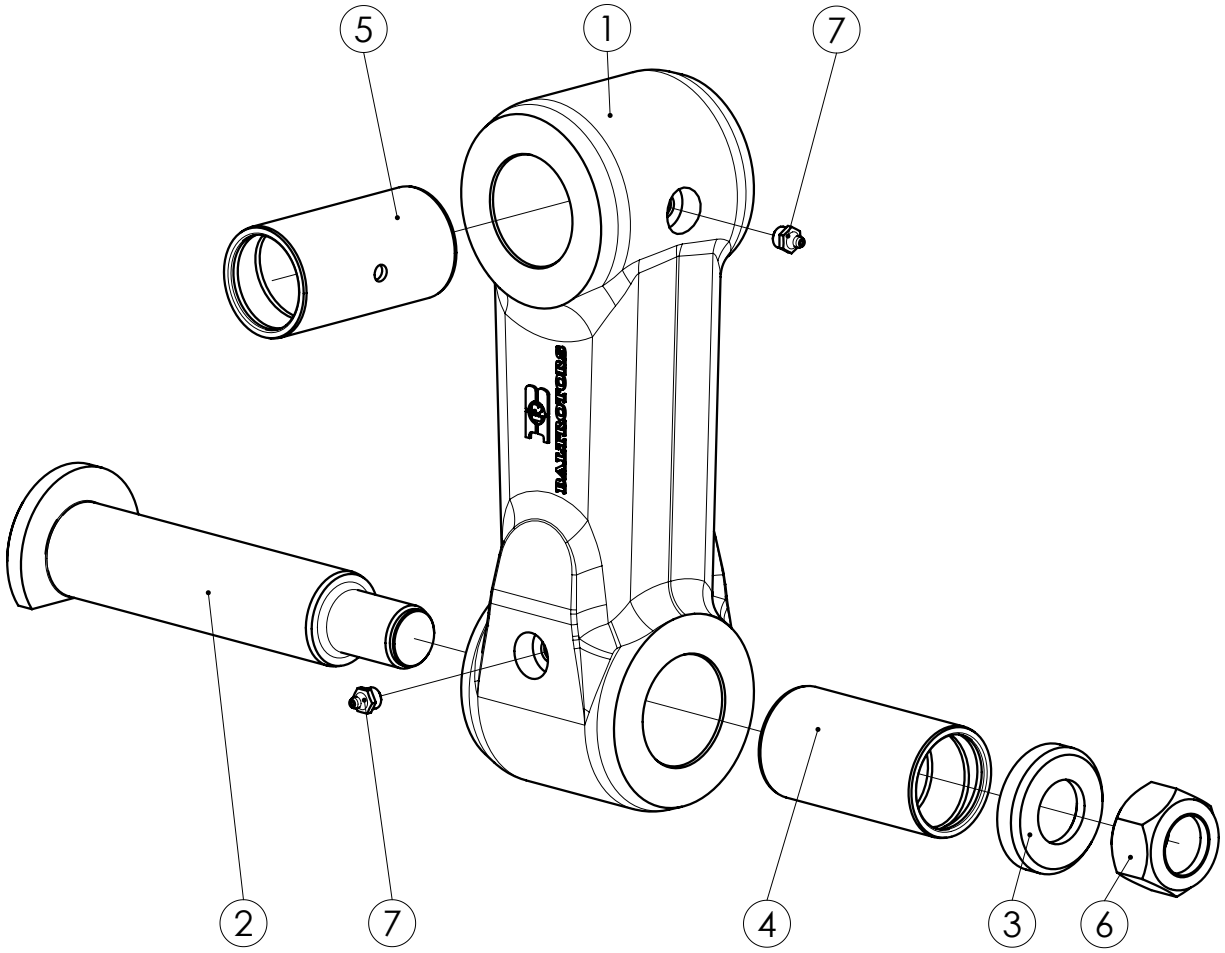

Pos.	Part No.	Description	BR 3/50	BR 3/45	BR 3/40	BR 3/35	BR 3-80/50	BR 3-80/45	BR 3-80/40	BR 3-80/35	BR 3-80/30
1	BR 3.001-02	Link	1	-	-	-	-	-	-	-	-
	BR 3.001-01		-	1	1	1	-	-	-	-	-
	BR 3.80.001-01		-	-	-	-	1	-	-	-	-
	BR 3-80.001		-	-	-	-	-	1	1	1	1
2	BR 3.002	Pin	1	1	1	1	1	1	1	1	1
3	BR 2.003	Washer	1	1	1	1	1	1	1	1	1
4	BR 3.004-02	Steel bushing	1	1	1	1	1	1	1	1	1
5	BR 3.004-04	Steel bushing	1	-	-	-	-	-	-	-	-
	BR 3.004-02		-	1	-	-	-	-	-	-	-
	BR 3.004-01		-	-	1	-	-	-	-	-	-
	BR 3.004		-	-	-	1	-	-	-	-	-
	BR 3.004-05		-	-	-	-	1	-	-	-	-
	BR 2.004-03		-	-	-	-	-	1	-	-	-
	BR 2.004-02		-	-	-	-	-	-	1	-	-
	BR 2.004-01		-	-	-	-	-	-	-	1	-
	BR 2.004		-	-	-	-	-	-	-	-	1
6	M30x1.5	Nut	1	1	1	1	1	1	1	1	1
7	1.2.C6	Grease nipple	2	2	2	2	2	2	2	2	2

BALTROTORS
Instituta Street - 1, Salaspils. Riga region, LATVIA LV-2169
Phone: +(371) 67 981074, Fax: +(371) 67 981075
E-mail: baltrotors@baltrotors.lv

LINK BR 3 B (with bronze bushing)

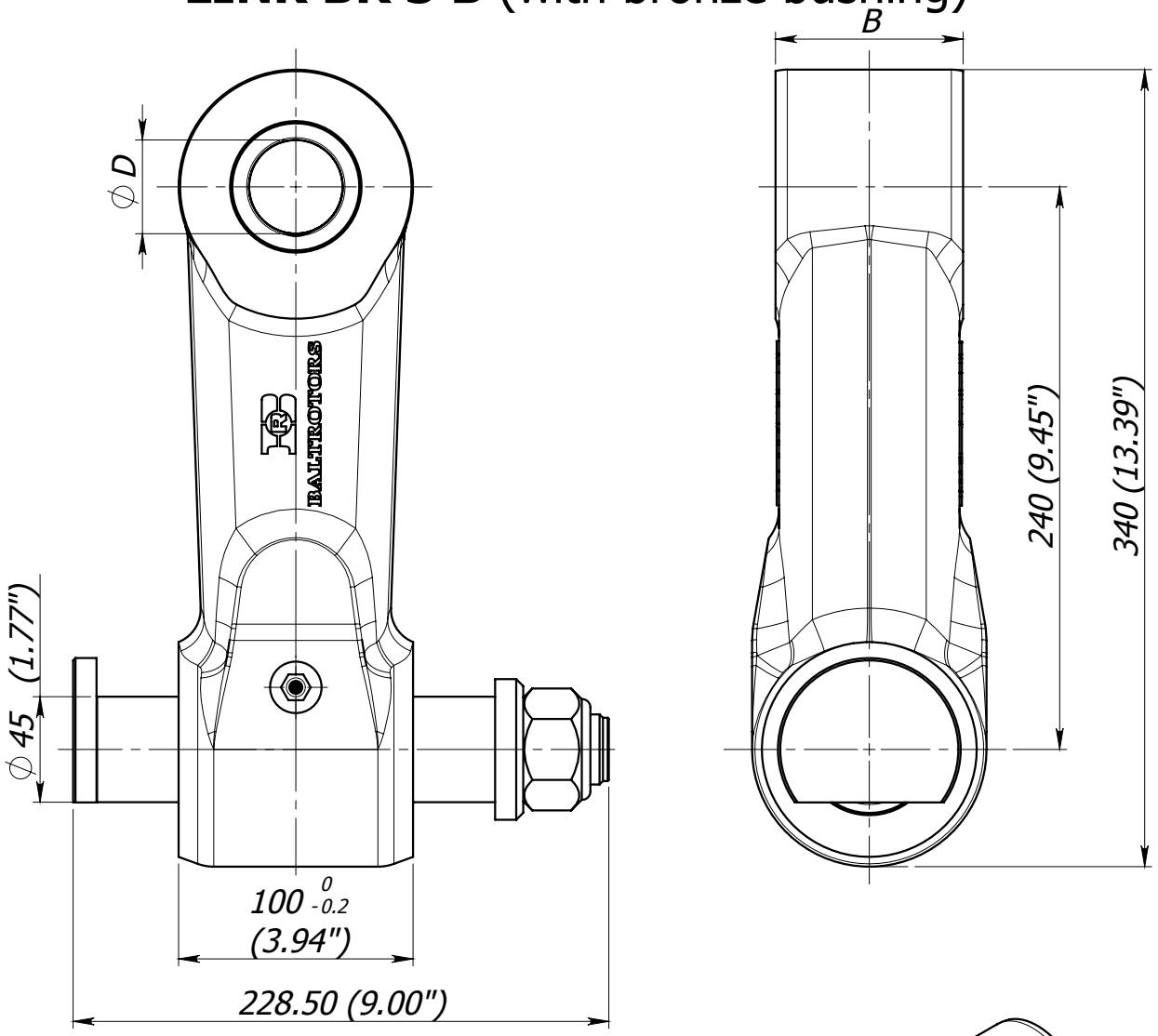

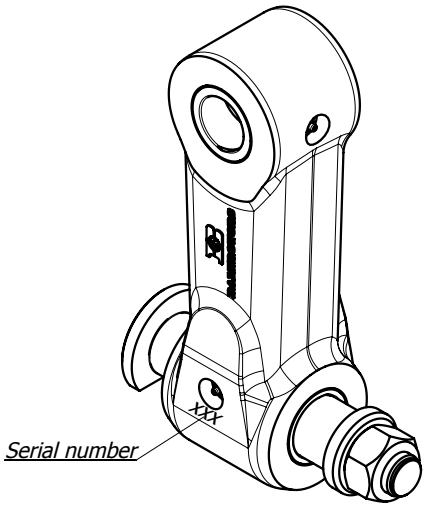

Dimensions		
Crane nose pivot pin diameter ∅D (mm)	Link width B (mm)	
	$80^{0}_{-0.2}$ (3.15")	$100^{0}_{-0.2}$ (3.94")
45 (1.77")	BR 3-80 B/45	BR 3 B/45
40 (1.57")	BR 3-80 B/40	BR 3 B/40

** Pin locking nut is tightened with a torque of 120 Nm (89 lb ft)*
** Weight - 20.5±1 kg (44.09±2.20 lb)*
** Fill grease Starplex EP 2, through lubricating nipple (pos. 7), until it will appear to the external surfaces. Greasing must be repeated after every 8 working hours of the link.*

2007.10.17.

BALTROTORS
Instituta Street - 1, Salaspils. Riga region, LATVIA LV-2169
Phone: +(371) 67 981074, Fax: +(371) 67 981075
E-mail: baltrotors@baltrotors.lv

LINK BR 3 B (with bronze bushing)

List of parts

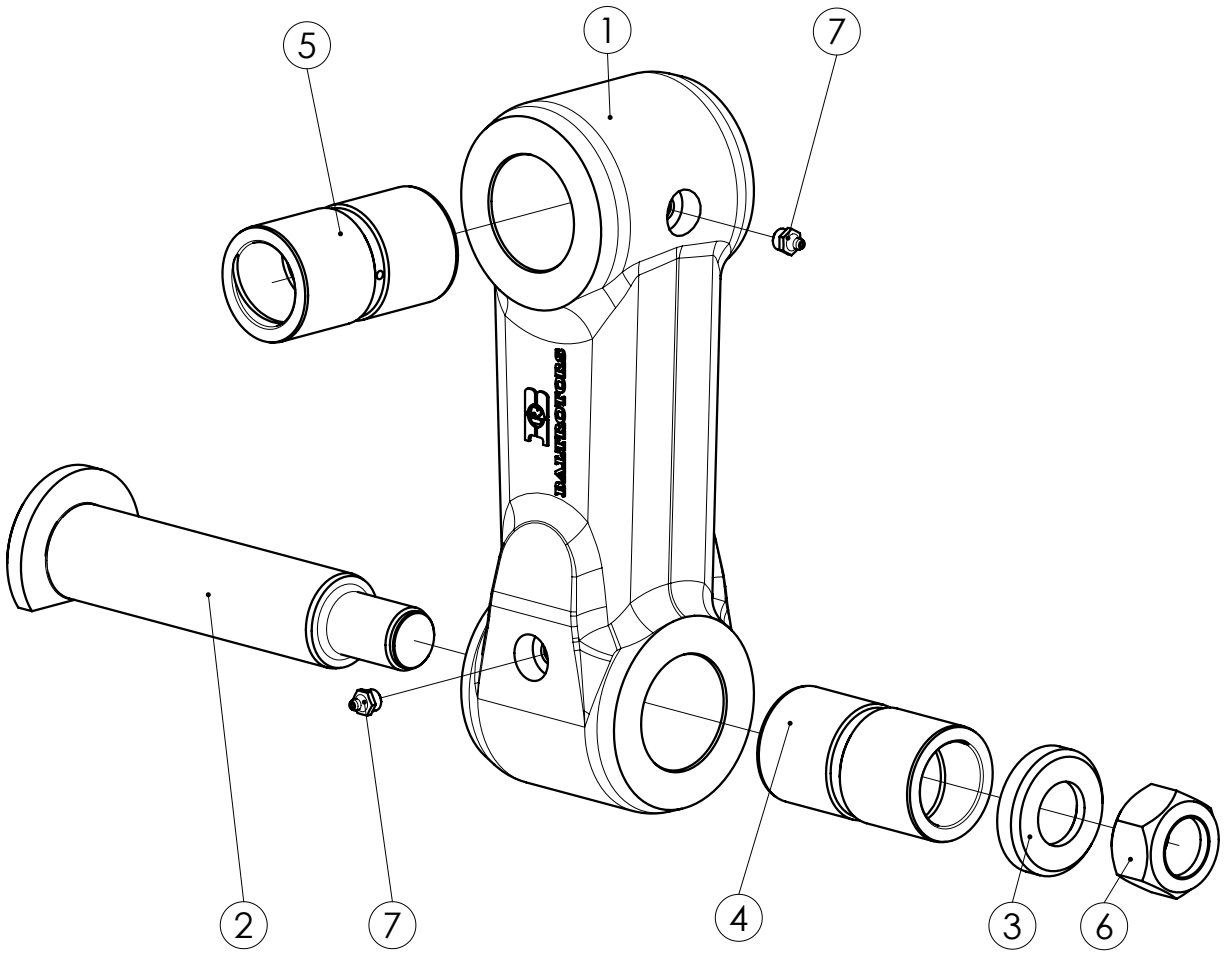

Pos.	Part No.	Description	BR 3 B/45	BR 3 B/40	BR 3-80 B/45	BR 3-80 B/40
1	BR 3 B.001	Link	1	1	-	-
	BR 3-80 B.001		-	-	1	1
2	BR 3.002	Pin	1	1	1	1
3	BR 2.003	Washer	1	1	1	1
4	BR 30 K.009	Bushing	1	1	1	1
5	BR 30 K.009	Bushing	1	-	-	-
	BR 30 K.010		-	1	-	-
	BR 20 K.009		-	-	1	-
	BR 20 K.010		-	-	-	1
6	M30x1.5	Nut	1	1	1	1
7	1.2.C6	Grease nipple	2	2	2	2

BALTROTORS
Instituta Street - 1, Salaspils. Riga region, LATVIA LV-2169
Phone: +(371) 67 981074, Fax: +(371) 67 981075
E-mail: baltrotors@baltrotors.lv

LINK BR 4

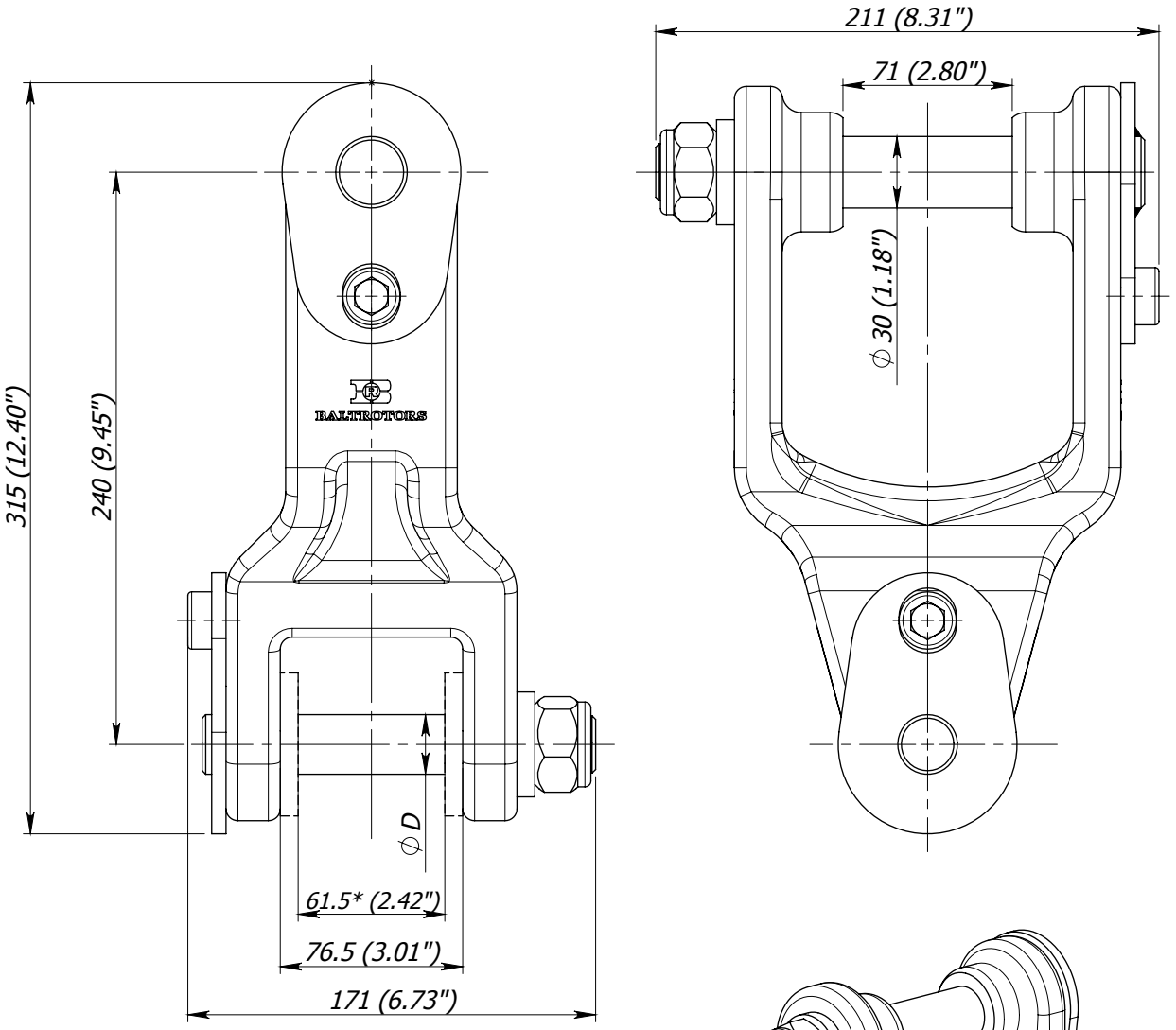

**** Only by request for rotator GR 30***

Link	Pin diameter D (mm)
BR 4	25 (0.98")
BR 4-A	30 (1.18")

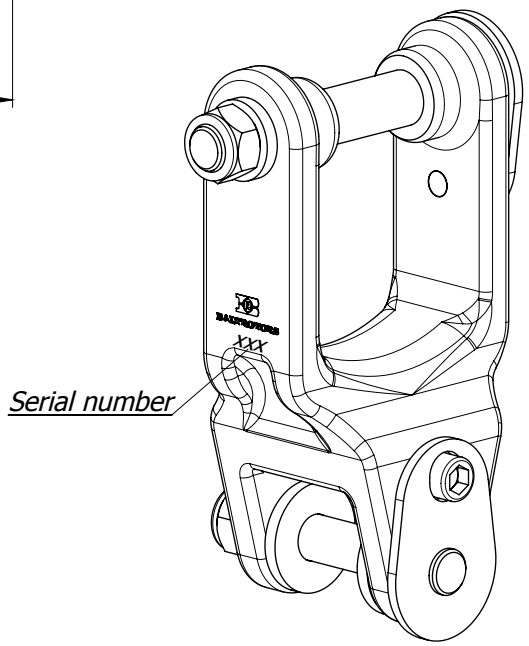

- *Pin locking nut is tightened with a torque of 120 Nm (89 lb ft)*
- *Weight - 12.5±1 kg (27.56±2.20 lb)*

2007.10.05. Sheet 1 of 2

BALTROTORS
Instituta Street - 1, Salaspils. Riga region, LATVIA LV-2169
Phone: +(371) 67 981074, Fax: +(371) 67 981075
E-mail: baltrotors@baltrotors.lv

LINK BR 4

List of parts

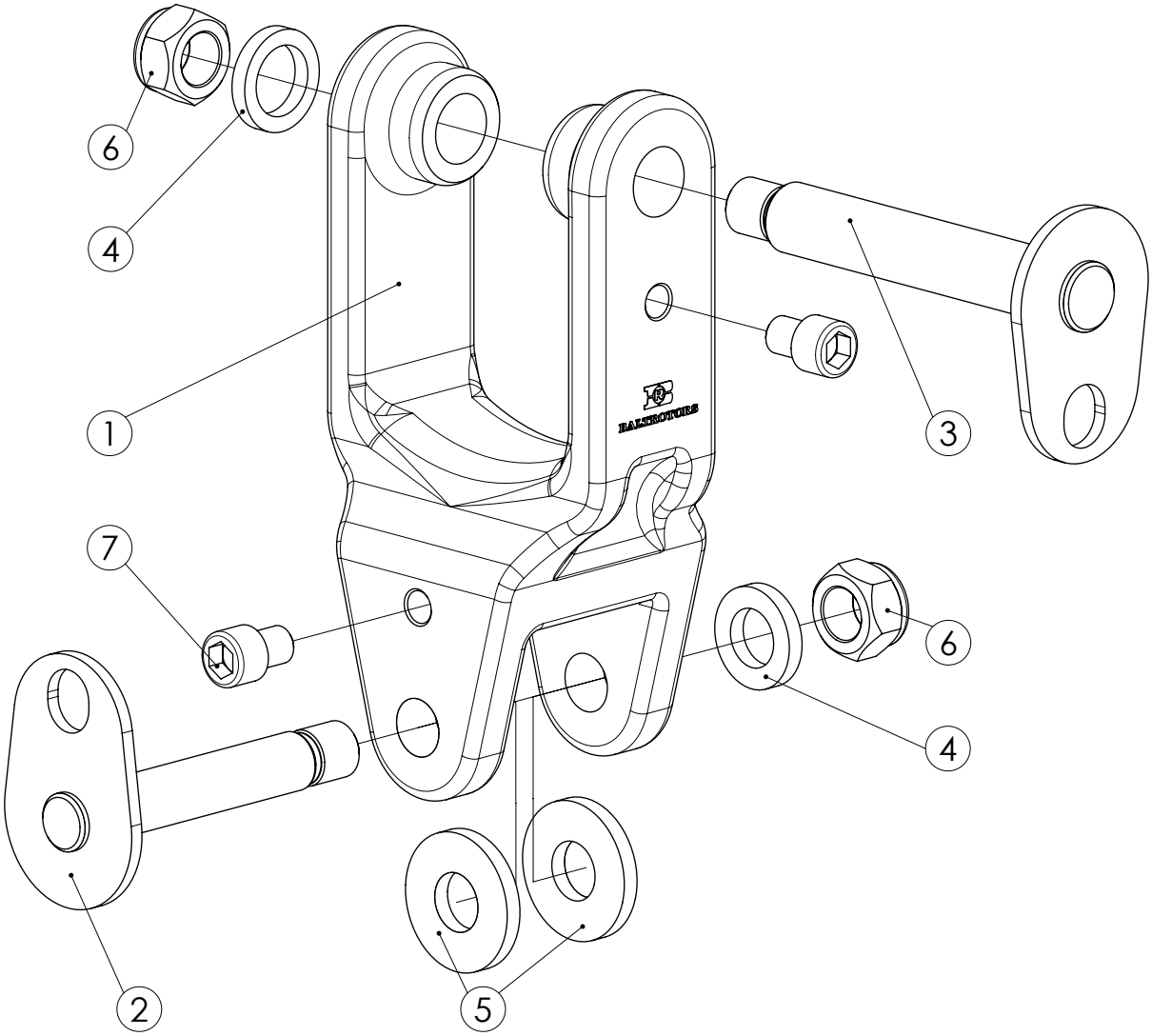

Washer (pos. 5) only by request for rotator GR 30.

Pos.	Part	Title	BR 4	BR 4-A	Notes
1	BR 4.001/25	Link	1	-	
	BR 4A.001/30		-	1	
2	BR 1.01	Pin	1	-	
	BR 1-A.01		-	1	
3	BR 4.01	Pin	1	1	
4	BR 1.003	Washer	1	-	
	BR 1-A.003		1	2	
5	BR 1.003 P	Washer	2	-	
6	M24x1.5	Nut	2	2	
7	MC6S 12.9 M16x20	Screw	2	2	

BALTROTORS
Instituta Street - 1, Salaspils. Riga region, LATVIA LV-2169
Phone: +(371) 67 981074, Fax: +(371) 67 981075
E-mail: baltrotors@baltrotors.lv

LINK BR 10

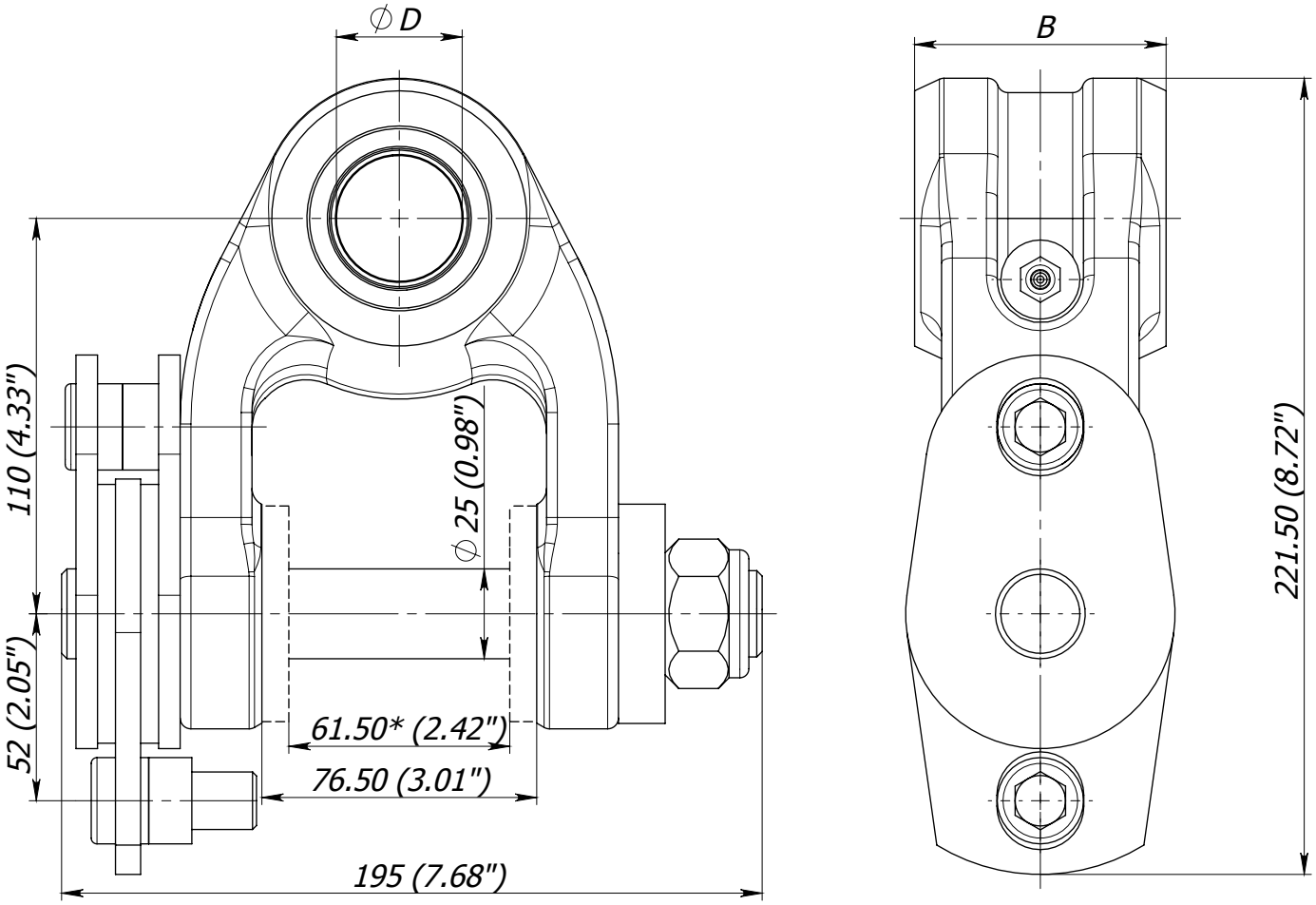

**** Only by request for rotator GR 30***

Dimensions			
Crane nose pivot pin diameter ∅D (mm)	Link width B (mm)		
	$80^{0}_{-0.3}$ (3.15")	$70^{0}_{-0.3}$ (2.76")	$60^{0}_{-0.3}$ (2.36")
45 (1.77")	BR 10/80/45	BR 10/70/45	BR 10/60/45
40 (1.57")	BR 10/80/40	BR 10/70/40	BR 10/60/40
35 (1.38")	BR 10/80/35	BR 10/70/35	BR 10/60/35
30 (1.18")	BR 10/80/30	BR 10/70/30	BR 10/60/30
25 (0.98")	BR 10/80/25	BR 10/70/25	BR 10/60/25
20 (0.79")	BR 10/80/20	BR 10/70/20	BR 10/60/20

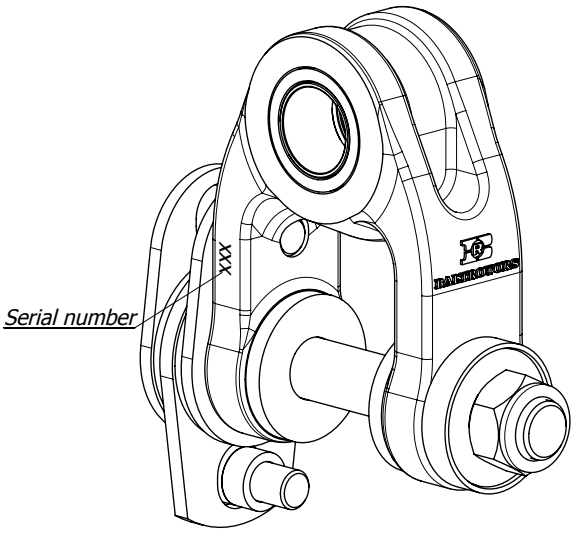

2007.10.05.

- *Pin locking nut is tightened with a torque of 60 - 160 Nm (45 - 120 lb ft) dependent on desired brake power.*
- *Weight - 6.5±1 kg (14.55±2.20 lb)*
- *Fill grease Starplex EP 2, through lubricating nipple (pos. 15), until it will appear to the external surfaces. Greasing must be repeated after every 8 working hours of the link.*

BALTROTORS

Instituta Street - 1, Salaspils. Riga region, LATVIA LV-2169
Phone: +(371) 67 981074, Fax: +(371) 67 981075
E-mail: baltrotors@baltrotors.lv

LINK BR 10

List of parts

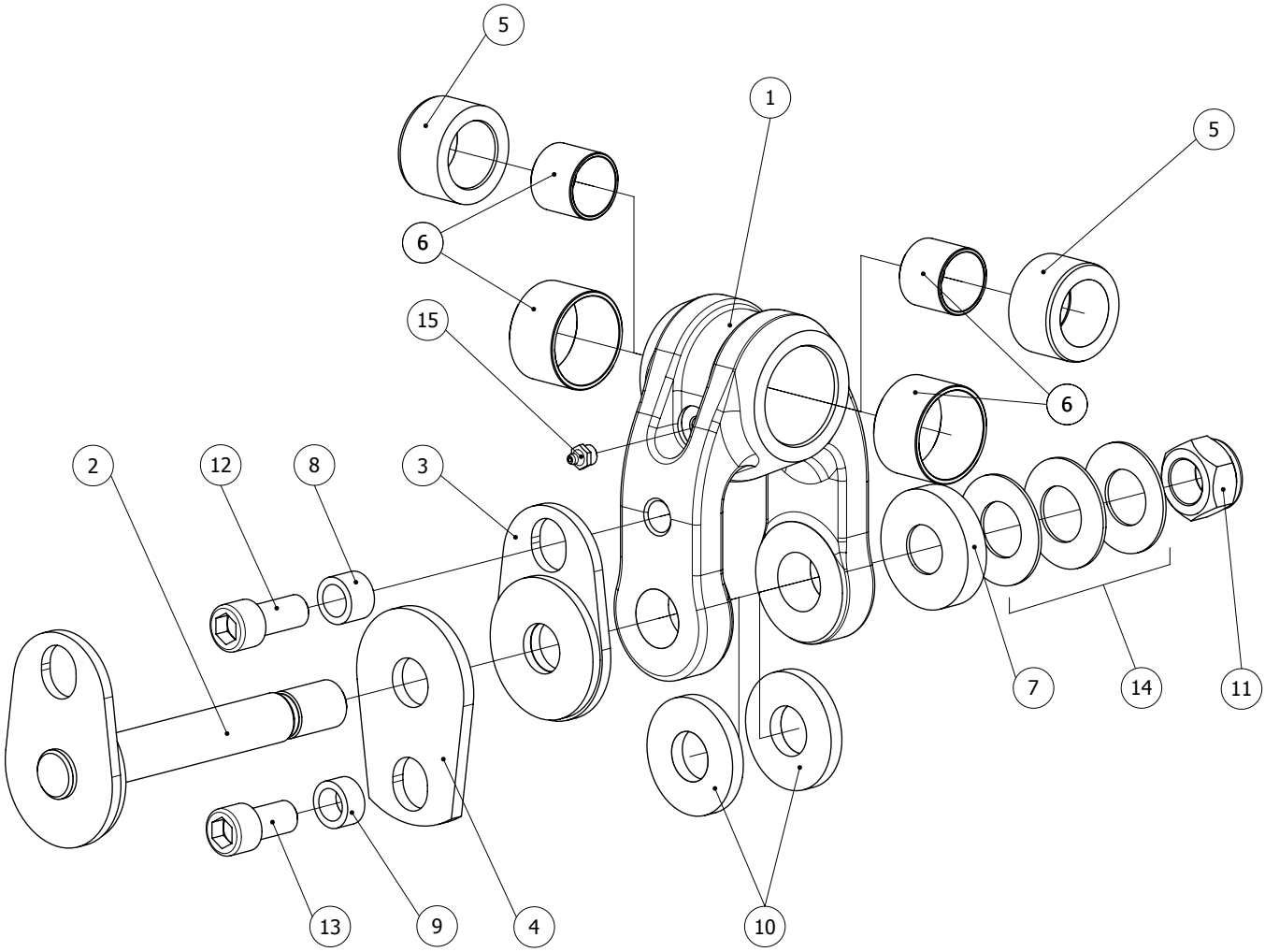

2007.10.05.

Washer (pos. 10) only by request for rotator GR 30.

BALTROTORS

Instituta Street - 1, Salaspils. Riga region, LATVIA LV-2169
Phone: +(371) 67 981074, Fax: +(371) 67 981075
E-mail: baltrotors@baltrotors.lv

LINK BR 10

List of parts

Pos.	Part	Title	BR 10/80/45	BR 10/80/40	BR 10/80/35	BR 10/80/30	BR 10/80/25	BR 10/80/20	BR 10/70/45	BR 10/70/40	BR 10/70/35	BR 10/70/30	BR 10/70/25	BR 10/70/20	BR 10/60/45	BR 10/60/40	BR 10/60/35	BR 10/60/30	BR 10/60/25	BR 10/60/20	Notes
1	BR1.001-80	Link	1	1	1	1	1	1	-	-	-	-	-	-	-	-	-	-	-	-	
	BR1.001-70		-	-	-	-	-	-	1	1	1	1	1	1	-	-	-	-	-	-	
	BR1.001-60		-	-	-	-	-	-	-	-	-	-	-	-	1	1	1	1	1	1	
2	BR 10.01	Pin with brake	1	1	1	1	1	1	1	1	1	1	1	1	1	1	1	1	1	1	
3	BR 10.02	Planch with brake	1	1	1	1	1	1	1	1	1	1	1	1	1	1	1	1	1	1	
4	BR 10.001	Plate	1	1	1	1	1	1	1	1	1	1	1	1	1	1	1	1	1	1	
5	BR 1.02.001/70/40	Bushing	-	2	-	-	-	-	-	2	-	-	-	-	-	-	-	-	-	-	
	BR 1.02.001/70/35		-	-	2	-	-	-	-	-	2	-	-	-	-	-	-	-	-	-	
	BR 1.02.001/70/30		-	-	-	2	-	-	-	-	-	2	-	-	-	-	-	-	-	-	
	BR 1.02.001/70/25		-	-	-	-	2	-	-	-	-	-	2	-	-	-	-	-	-	-	
	BR 1.02.001/70/20		-	-	-	-	-	2	-	-	-	-	-	2	-	-	-	-	-	-	
	BR 1.02.001/60/40		-	-	-	-	-	-	-	-	-	-	-	-	-	2	-	-	-	-	
	BR 1.02.001/60/35		-	-	-	-	-	-	-	-	-	-	-	-	-	-	2	-	-	-	
	BR 1.02.001/60/30		-	-	-	-	-	-	-	-	-	-	-	-	-	-	-	2	-	-	
	BR 1.02.001/60/25		-	-	-	-	-	-	-	-	-	-	-	-	-	-	-	-	2	-	
	BR 1.02.001/60/20		-	-	-	-	-	-	-	-	-	-	-	-	-	-	-	-	-	2	
6	WB 800 4530	Bronze bushing	2	-	-	-	-	-	2	-	-	-	-	-	-	-	-	-	-	-	
	WB 800 4030		-	2	-	-	-	-	-	2	-	-	-	-	-	-	-	-	-	-	
	WB 800 3530		-	-	2	-	-	-	-	-	2	-	-	-	-	-	-	-	-	-	
	WB 800 3030		-	-	-	2	-	-	-	-	-	2	-	-	-	-	-	-	-	-	
	WB 800 2530		-	-	-	-	2	-	-	-	-	-	2	-	-	-	-	-	-	-	
	WB 800 2020		-	-	-	-	-	2	-	-	-	-	-	2	-	-	-	-	-	2	
	BR 1.02.002/60/45		-	-	-	-	-	-	-	-	-	-	-	-	2	-	-	-	-	-	
	BR 1.02.002/60/40		-	-	-	-	-	-	-	-	-	-	-	-	-	2	-	-	-	-	
	BR 1.02.002/60/35		-	-	-	-	-	-	-	-	-	-	-	-	-	-	2	-	-	-	
	BR 1.02.002/60/30		-	-	-	-	-	-	-	-	-	-	-	-	-	-	-	2	-	-	
	BR 1.02.002/60/25		-	-	-	-	-	-	-	-	-	-	-	-	-	-	-	-	2	-	
7	BR 10.004-01	Washer	1	1	1	1	1	1	1	1	1	1	1	1	1	1	1	1	1	1	
8	BR 10.002	Washer	1	1	1	1	1	1	1	1	1	1	1	1	1	1	1	1	1	1	
9	BR 10.002-01	Washer	1	1	1	1	1	1	1	1	1	1	1	1	1	1	1	1	1	1	
10	BR 1.003 P	Washer	2	2	2	2	2	2	2	2	2	2	2	2	2	2	2	2	2	2	Only for GR 30
11	M24x1.5	Nut	1	1	1	1	1	1	1	1	1	1	1	1	1	1	1	1	1	1	
12	MC6S 12.9 M16x35	Screw	1	1	1	1	1	1	1	1	1	1	1	1	1	1	1	1	1	1	
13	MC6S 12.9 M16x30	Screw	1	1	1	1	1	1	1	1	1	1	1	1	1	1	1	1	1	1	
14	Cat. no. 4362	Disc spring	3	3	3	3	3	3	3	3	3	3	3	3	3	3	3	3	3	3	
15	1.2.C6	Grease nipple	1	1	1	1	1	1	1	1	1	1	1	1	1	1	1	1	1	1	

BALTROTORS
Instituta Street - 1, Salaspils. Riga region, LATVIA LV-2169
Phone: +(371) 67 981074, Fax: +(371) 67 981075
E-mail: baltrotors@baltrotors.lv

LINK BR 10-A

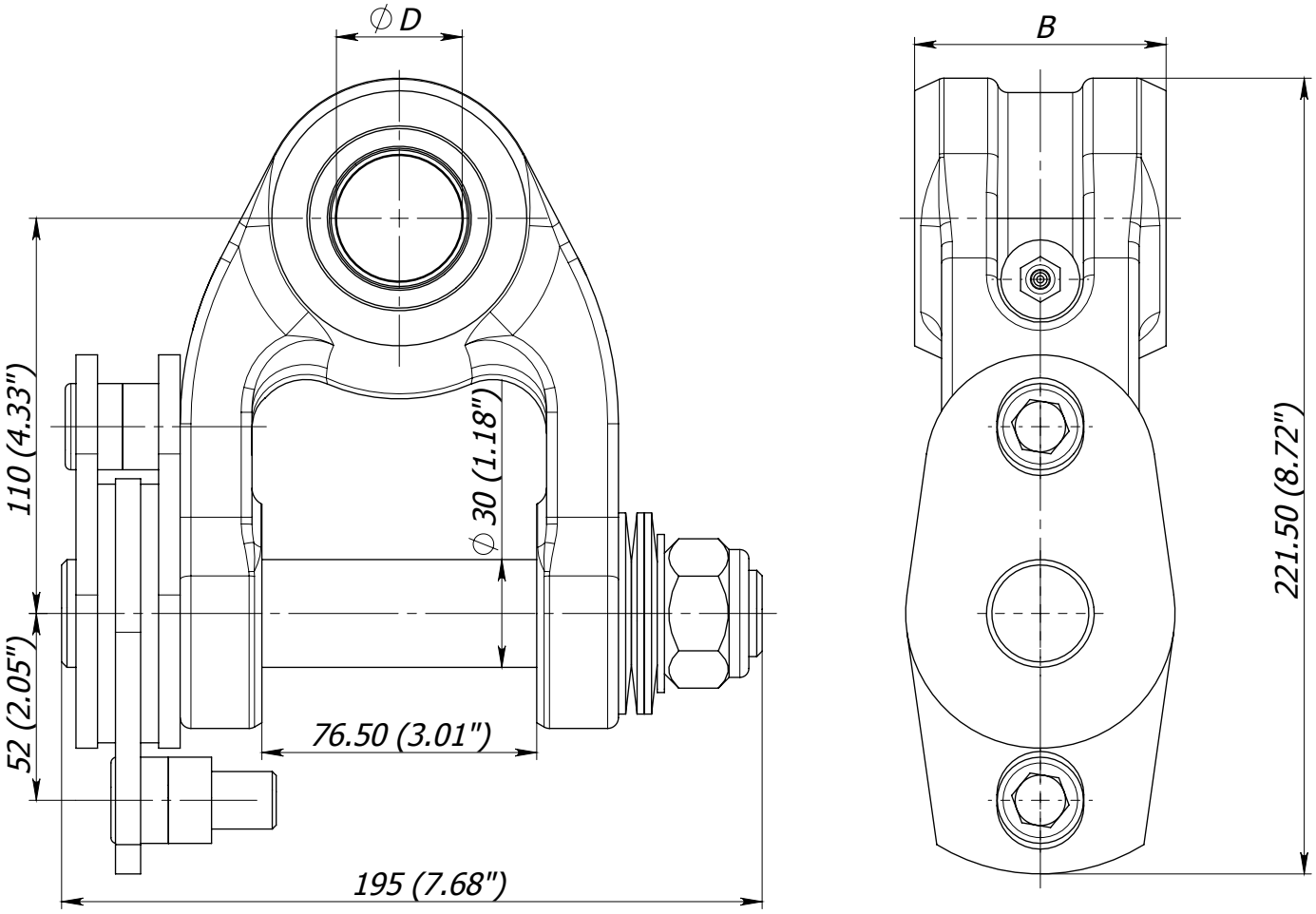

Dimensions			
Crane nose pivot pin diameter ∅D (mm)	Link width B (mm)		
	$80^{0}_{-0.3}$ (3.15")	$70^{0}_{-0.3}$ (2.76")	$60^{0}_{-0.3}$ (2.36")
45 (1.77")	BR 10-A/80/45	BR 10-A/70/45	BR 10-A/60/45
40 (1.57")	BR 10-A/80/40	BR 10-A/70/40	BR 10-A/60/40
35 (1.38")	BR 10-A/80/35	BR 10-A/70/35	BR 10-A/60/35
30 (1.18")	BR 10-A/80/30	BR 10-A/70/30	BR 10-A/60/30
25 (0.98")	BR 10-A/80/25	BR 10-A/70/25	BR 10-A/60/25
20 (0.79")	BR 10-A/80/20	BR 10-A/70/20	BR 10-A/60/20

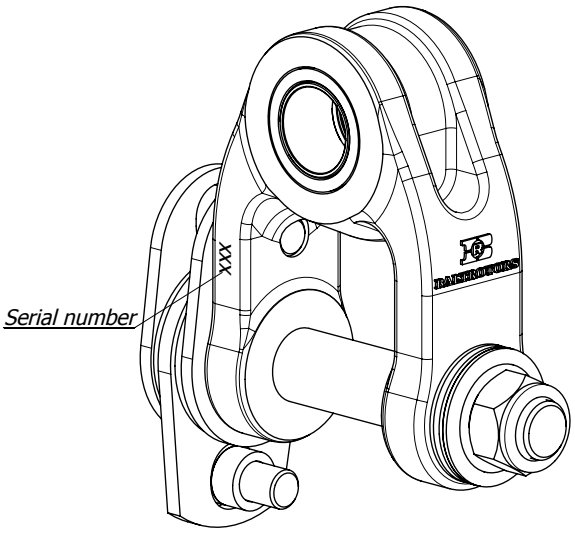

- *Pin locking nut is tightened with a torque of 60 - 160 Nm (45 - 120 lb ft) dependent on desired brake power.*
- *Weight - 6.5±1 kg (14.55±2.20 lb)*
- *Fill grease Starplex EP 2, through lubricating nipple (pos. 14), until it will appear to the external surfaces. Greasing must be repeated after every 8 working hours of the link.*

2007.10.05.

BALTROTORS

Instituta Street - 1, Salaspils. Riga region, LATVIA LV-2169
Phone: +(371) 67 981074, Fax: +(371) 67 981075
E-mail: baltrotors@baltrotors.lv

LINK BR 10-A

List of parts

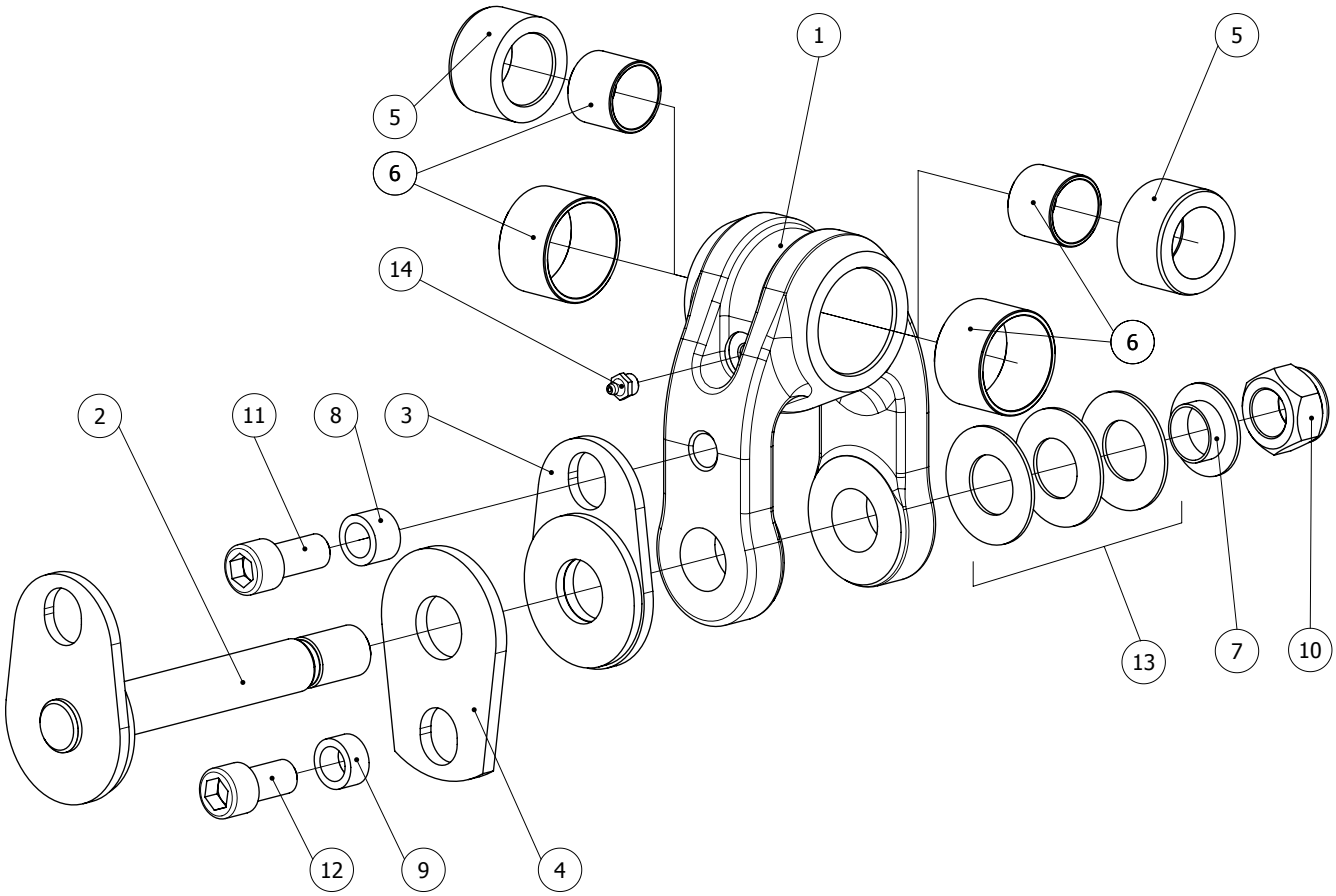

BALTROTORS
Instituta Street - 1, Salaspils. Riga region, LATVIA LV-2169
Phone: +(371) 67 981074, Fax: +(371) 67 981075
E-mail: baltrotors@baltrotors.lv

LINK BR 10-A

List of parts

Pos.	Part	Title	BR 10-A/80/45	BR 10-A/80/40	BR 10-A/80/35	BR 10-A/80/30	BR 10-A/80/25	BR 10-A/80/20	BR 10-A/70/45	BR 10-A/70/40	BR 10-A/70/35	BR 10-A/70/30	BR 10-A/70/25	BR 10-A/70/20	BR 10-A/60/45	BR 10-A/60/40	BR 10-A/60/35	BR 10-A/60/30	BR 10-A/60/25	BR 10-A/60/20	Notes
1	BR1-A.001-80	Link	1	1	1	1	1	1	-	-	-	-	-	-	-	-	-	-	-	-	
	BR1-A.001-70		-	-	-	-	-	-	1	1	1	1	1	1	-	-	-	-	-	-	
	BR1-A.001-60		-	-	-	-	-	-	-	-	-	-	-	-	1	1	1	1	1	1	
2	BR 10-A.01	Pin with brake	1	1	1	1	1	1	1	1	1	1	1	1	1	1	1	1	1	1	
3	BR 10-A.02	Planch with brake	1	1	1	1	1	1	1	1	1	1	1	1	1	1	1	1	1	1	
4	BR 10-A.001	Plate	1	1	1	1	1	1	1	1	1	1	1	1	1	1	1	1	1	1	
5	BR 1.02.001/70/40	Bushing	-	2	-	-	-	-	-	2	-	-	-	-	-	-	-	-	-	-	
	BR 1.02.001/70/35		-	-	2	-	-	-	-	-	2	-	-	-	-	-	-	-	-	-	
	BR 1.02.001/70/30		-	-	-	2	-	-	-	-	-	2	-	-	-	-	-	-	-	-	
	BR 1.02.001/70/25		-	-	-	-	2	-	-	-	-	-	2	-	-	-	-	-	-	-	
	BR 1.02.001/70/20		-	-	-	-	-	2	-	-	-	-	-	2	-	-	-	-	-	-	
	BR 1.02.001/60/40		-	-	-	-	-	-	-	-	-	-	-	-	-	2	-	-	-	-	
	BR 1.02.001/60/35		-	-	-	-	-	-	-	-	-	-	-	-	-	-	2	-	-	-	
	BR 1.02.001/60/30		-	-	-	-	-	-	-	-	-	-	-	-	-	-	-	2	-	-	
	BR 1.02.001/60/25		-	-	-	-	-	-	-	-	-	-	-	-	-	-	-	-	2	-	
	BR 1.02.001/60/20		-	-	-	-	-	-	-	-	-	-	-	-	-	-	-	-	-	2	
6	WB 800 4530	Bronze bushing	2	-	-	-	-	-	2	-	-	-	-	-	-	-	-	-	-	-	
	WB 800 4030		-	2	-	-	-	-	-	2	-	-	-	-	-	-	-	-	-	-	
	WB 800 3530		-	-	2	-	-	-	-	-	2	-	-	-	-	-	-	-	-	-	
	WB 800 3030		-	-	-	2	-	-	-	-	-	2	-	-	-	-	-	-	-	-	
	WB 800 2530		-	-	-	-	2	-	-	-	-	-	2	-	-	-	-	-	-	-	
	WB 800 2020		-	-	-	-	-	2	-	-	-	-	-	2	-	-	-	-	-	2	
	BR 1.02.002/60/45		-	-	-	-	-	-	-	-	-	-	-	-	2	-	-	-	-	-	
	BR 1.02.002/60/40		-	-	-	-	-	-	-	-	-	-	-	-	-	2	-	-	-	-	
	BR 1.02.002/60/35		-	-	-	-	-	-	-	-	-	-	-	-	-	-	2	-	-	-	
	BR 1.02.002/60/30		-	-	-	-	-	-	-	-	-	-	-	-	-	-	-	2	-	-	
	BR 1.02.002/60/25		-	-	-	-	-	-	-	-	-	-	-	-	-	-	-	-	2	-	
7	BR 10.004	Inlet	1	1	1	1	1	1	1	1	1	1	1	1	1	1	1	1	1	1	
8	BR 10.002	Washer	1	1	1	1	1	1	1	1	1	1	1	1	1	1	1	1	1	1	
9	BR 10.002-01	Washer	1	1	1	1	1	1	1	1	1	1	1	1	1	1	1	1	1	1	
10	M24x1.5	Nut	1	1	1	1	1	1	1	1	1	1	1	1	1	1	1	1	1	1	
11	MC6S 12.9 M16x35	Screw	1	1	1	1	1	1	1	1	1	1	1	1	1	1	1	1	1	1	
12	MC6S 12.9 M16x30	Screw	1	1	1	1	1	1	1	1	1	1	1	1	1	1	1	1	1	1	
13	Cat. no. 4362	Disc spring	3	3	3	3	3	3	3	3	3	3	3	3	3	3	3	3	3	3	
14	1.2.C6	Grease nipple	1	1	1	1	1	1	1	1	1	1	1	1	1	1	1	1	1	1	

BALTROTORS
Instituta Street - 1, Salaspils. Riga region, LATVIA LV-2169
Phone: +(371) 67 981074, Fax: +(371) 67 981075
E-mail: baltrotors@baltrotors.lv

LINK BR 40

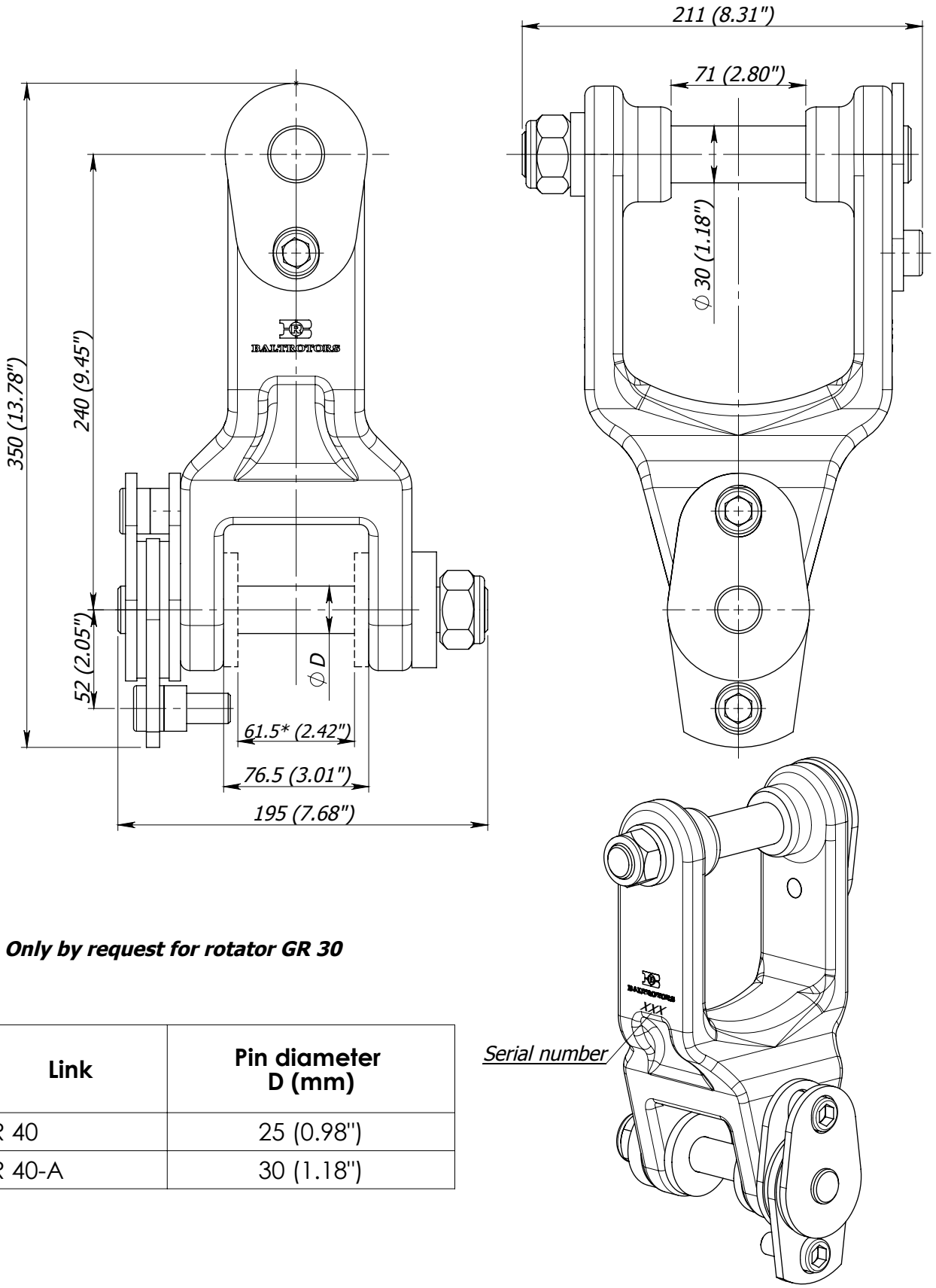

**** Only by request for rotator GR 30***

Link	Pin diameter D (mm)
BR 40	25 (0.98")
BR 40-A	30 (1.18")

- *Pin locking nut is tightened with a torque of 60 - 160 Nm (45 - 120 lb ft) dependent on desired brake power.*
- *Weight - 13.5±1 kg (29.76±2.20 lb)*

BALTROTORS
Instituta Street - 1, Salaspils. Riga region, LATVIA LV-2169
Phone: +(371) 67 981074, Fax: +(371) 67 981075
E-mail: baltrotors@baltrotors.lv

LINK BR 40

List of parts

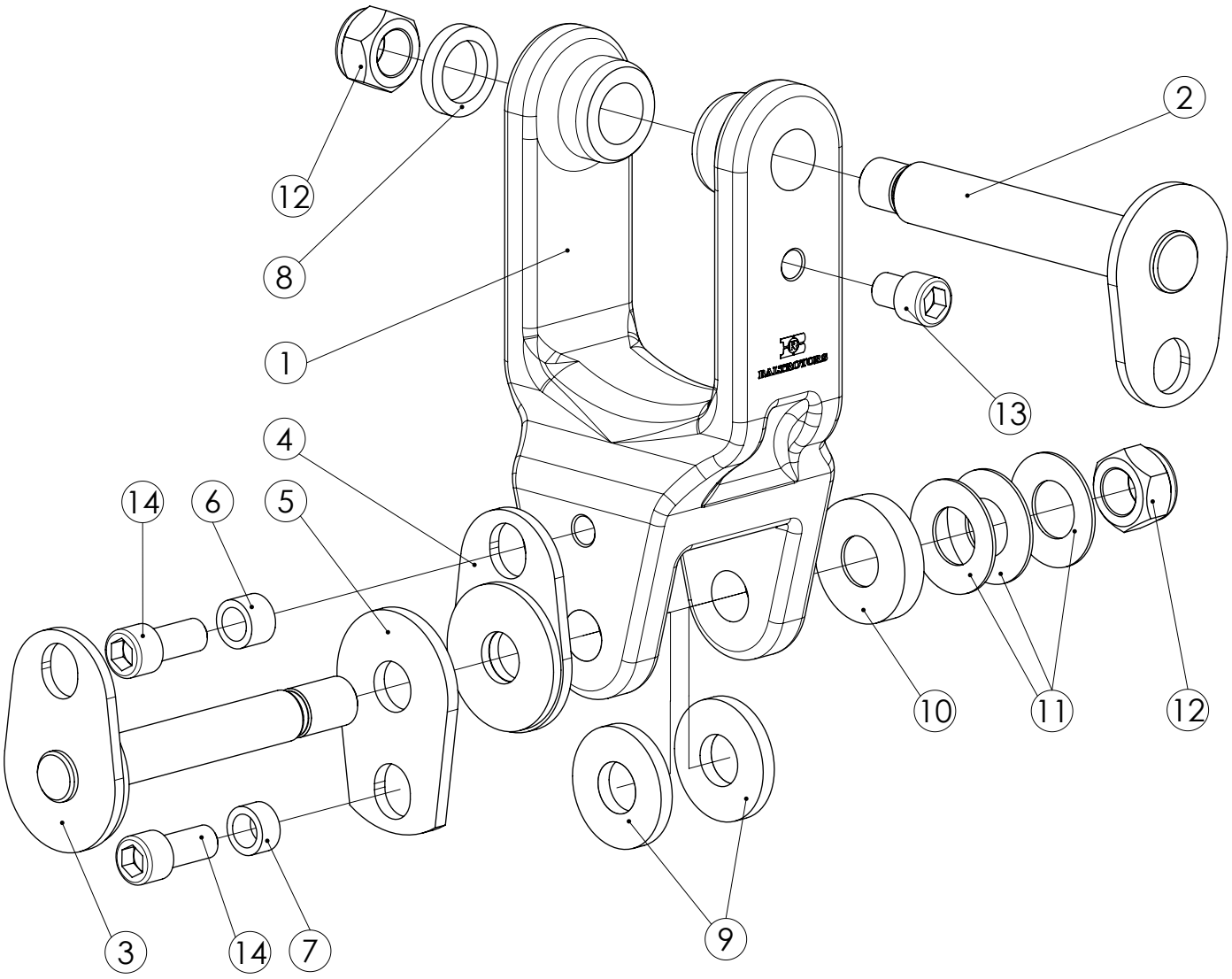

Washer (pos. 9) only by request for rotator GR 30.

BALTROTORS

Instituta Street - 1, Salaspils. Riga region, LATVIA LV-2169
Phone: +(371) 67 981074, Fax: +(371) 67 981075
E-mail: baltrotors@baltrotors.lv

LINK BR 40

List of parts

Pos.	Part	Title	BR 40	BR 40-A	Notes
1	BR 4.001/25	Link	1	-	
	BR 4A.001/30		-	1	
2	BR 4.01	Pin	1	1	
3	BR 10.01	Pin with brake	1	-	
	BR 10-A.01		-	1	
4	BR 10.02	Planch with brake	1	-	
	BR 10-A.02		-	1	
5	BR 10.001	Plate	1	-	
	BR 10-A.001		-	1	
6	BR 10.002	Washer	1	1	
7	BR 10.002-01	Washer	1	1	
8	BR 1-A.003	Washer	1	1	
9	BR 1.003 P	Washer	2	-	
10	BR 10.004-01	Washer	1	-	
	BR 10.004	Inlet	-	1	
11	Cat. no. 4362	Disc spring	3	3	
12	M24x1.5	Nut	2	2	
13	MC6S 12.9 M16x20	Screw	1	1	
14	MC6S 12.9 M16x35	Screw	2	2	

BALTROTORS

Instituta Street - 1, Salaspils. Riga region, LATVIA LV-2169
Phone: +(371) 67 981074, Fax: +(371) 67 981075
E-mail: baltrotors@baltrotors.lv

Swing damper BR 20 KS

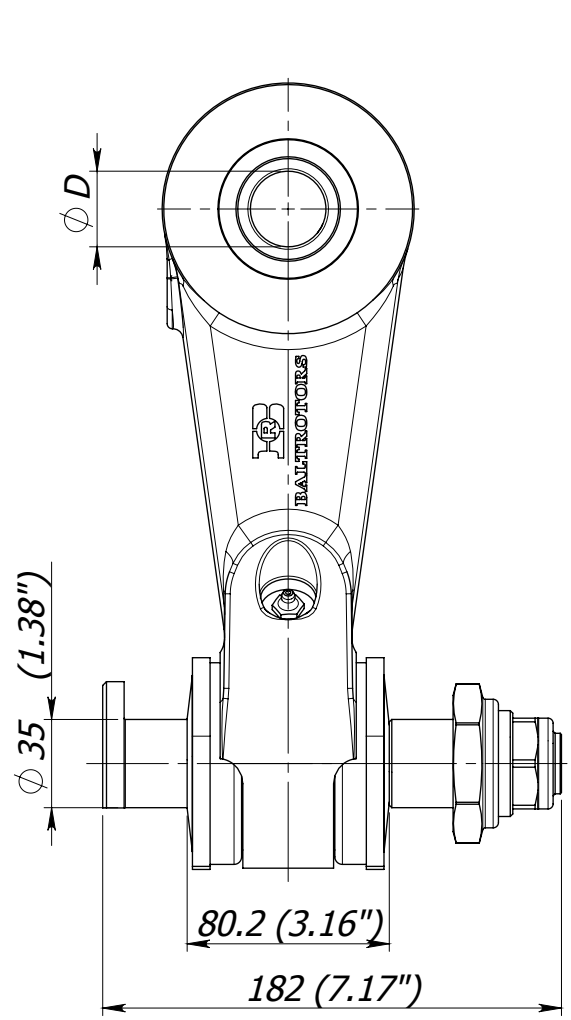

Link	Diameter D (mm)	Weight (kg)
BR 20 KS/45	45 (1.77")	13.65 (30.00 lb)
BR 20 KS/40	40 (1.57")	13.88 (30.60 lb)
BR 20 KS/35	35 (1.38")	13.99 (30.84 lb)
BR 20 KS/30	30 (1.18")	14.14 (31.17 lb)

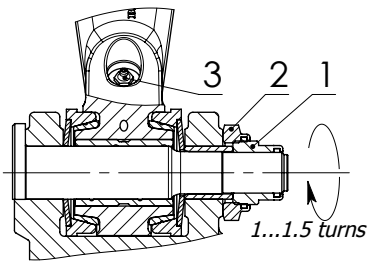

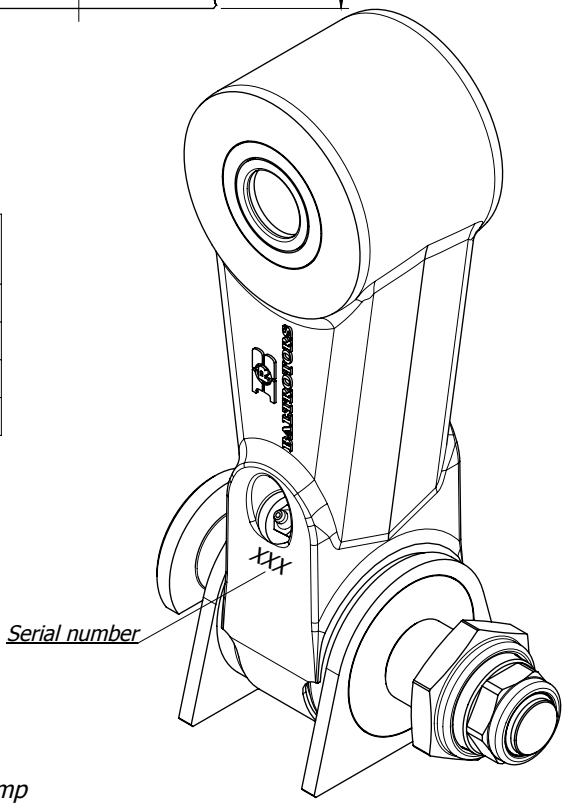

Instruction manual

To adjust the brake of the link, following actions have to be done:

- *release the lock nut (pos.2)*
- *twist the adjusting nut (pos.1) until the disc spring starts to clamp*
- *tighten the adjusting nut (pos.1) at 1...1.5 turns, that will provide braking moment of 200...250 Nm (148...185 lb ft)*
- *tighten the lock nut (pos.2) with tightening torque 100 Nm (74 lb ft).*

Greasing of lower slide bearing and brake cones is already done through lubricating nipple (pos.3). Fill grease Starplex EP 2 until it will appear to the external surfaces.
Greasing must be repeated after every 8 working hours of the link.
NOTICE! The link is delivered ungreased. It should be well greased before taking into exploitation.

2007.10.17.

BALTROTORS
Instituta Street - 1, Salaspils. Riga region, LATVIA LV-2169
Phone: +(371) 67 981074, Fax: +(371) 67 981075
E-mail: baltrotors@baltrotors.lv

Swing damper BR 20 KS

List of parts

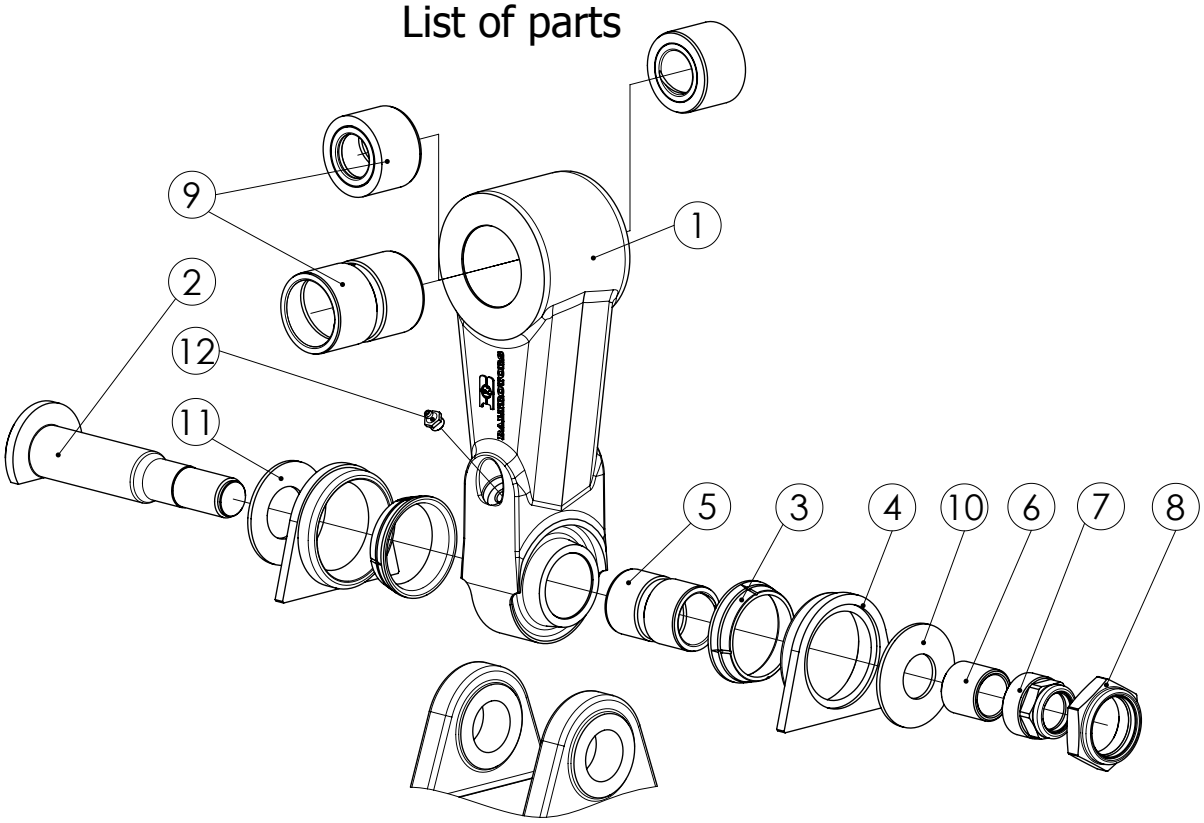

Pos.	Part No.	Description	BR 20 KS/45	BR 20 KS/40	BR 20 KS/35	BR 20 KS/30
1	BR 20 KS.001 LA	Link	1	1	1	1
2	BR 20 K.002-01	Pin	1	1	1	1
3	BR 20 K.003-01	Brake cone	2	2	2	2
4	BR 20 K.004-01	Pusher cone	2	2	2	2
5	BR 20 K.005	Bushing	1	1	1	1
6	BR 20K.006	Pusher	1	1	1	1
7	BR 20K.007-01	Adjustment nut	1	1	1	1
8	BR 20 K.008-01	Locknut	1	1	1	1
9	BR 20 K.009	Bushing	1	-	-	-
	BR 20 K.010		-	1	-	-
	BR 20 K.01		-	-	2	-
	BR 20 K.02		-	-	-	2
10	Cat. No. 4382	Disc spring	1	1	1	1
11	Cat. No. 4383	Disc spring	1	1	1	1
12	1.2.C6	Grease nipple	2	2	2	2

BALTROTORS
Instituta Street - 1, Salaspils. Riga region, LATVIA LV-2169
Phone: +(371) 67 981074, Fax: +(371) 67 981075
E-mail: baltrotors@baltrotors.lv

Swing damper BR 20 KS-100

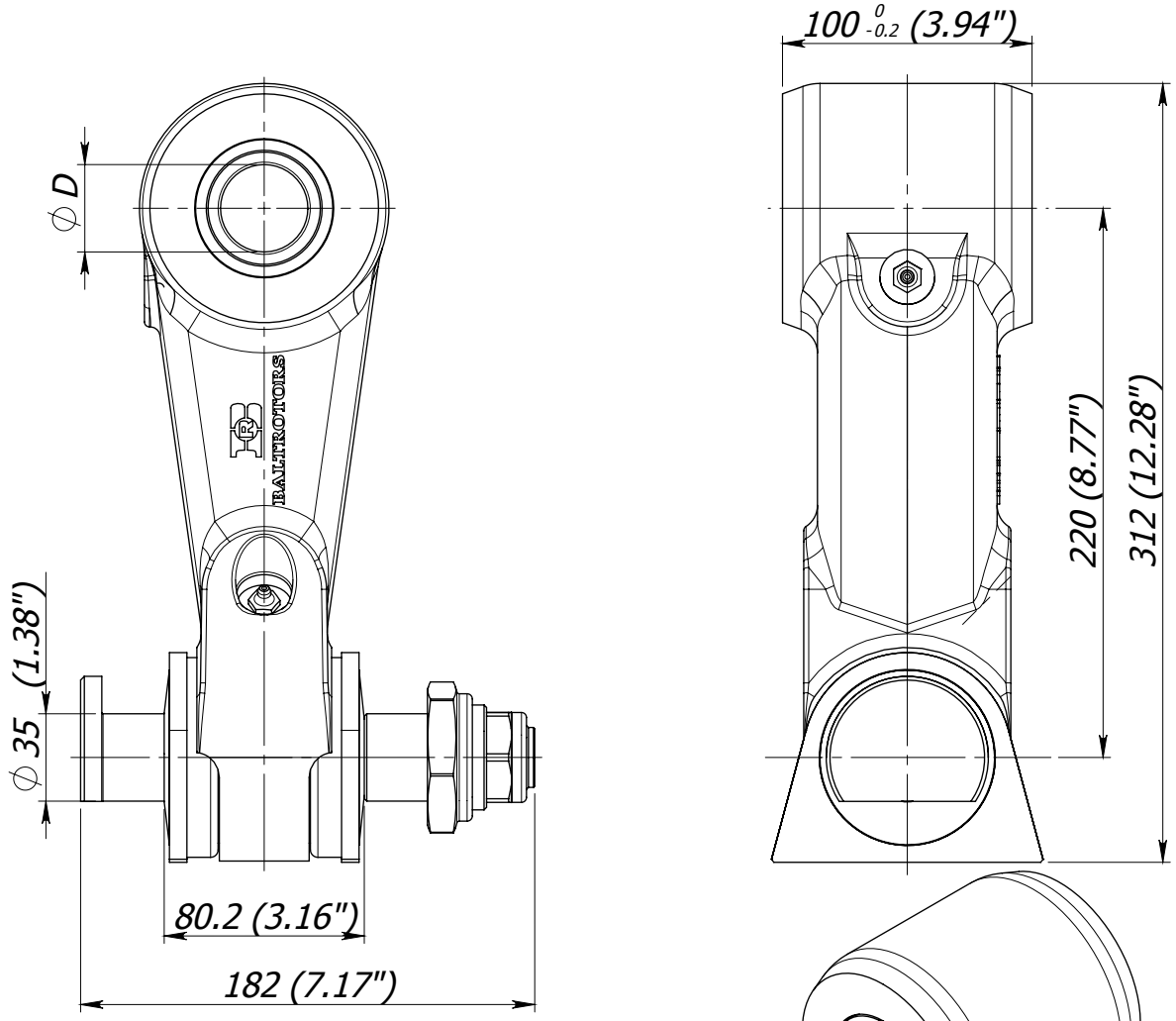

Link	Diameter D (mm)	Weight (kg)
BR 20 KS-100/45	45 (1.77")	14.56 (32.09 lb)
BR 20 KS-100/40	40 (1.57")	14.83 (32.69 lb)
BR 20 KS-100/35	35 (1.38")	15.04 (33.16 lb)

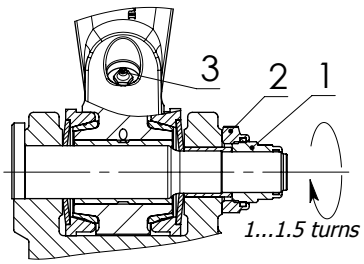

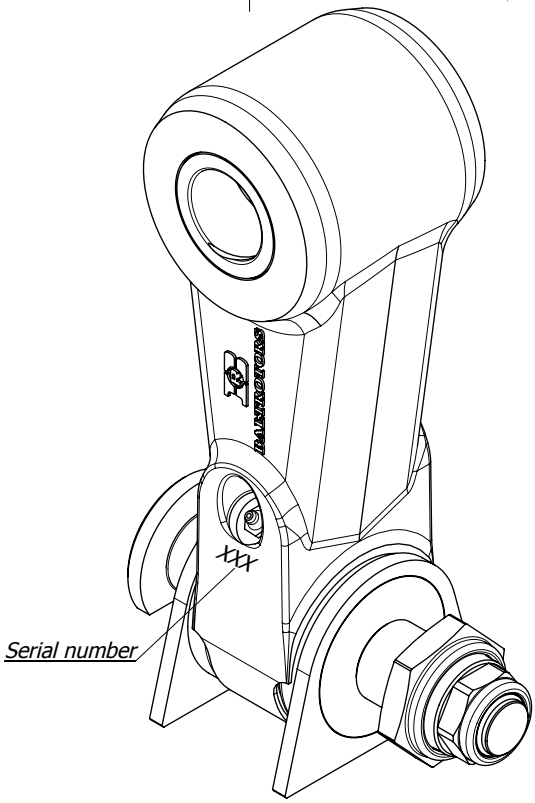

Instruction manual

To adjust the brake of the link, following actions have to be done:

- *release the lock nut (pos.2)*
- *twist the adjusting nut (pos.1) until the disc spring starts to clamp*
- *tighten the adjusting nut (pos.1) at 1...1.5 turns, that will provide braking moment of 200...250 Nm (148...185 lb ft)*
- *tighten the lock nut (pos.2) with tightening torque 100 Nm (74 lb ft).*

Greasing of lower slide bearing and brake cones is already done through lubricating nipple (pos.3). Fill grease Starplex EP 2 until it will appear to the external surfaces.
Greasing must be repeated after every 8 working hours of the link.
NOTICE! The link is delivered ungreased. It should be well greased before taking into exploitation.

2007.10.18.

BALTROTORS
Instituta Street - 1, Salaspils. Riga region, LATVIA LV-2169
Phone: +(371) 67 981074, Fax: +(371) 67 981075
E-mail: baltrotors@baltrotors.lv

Swing damper BR 20 KS-100

List of parts

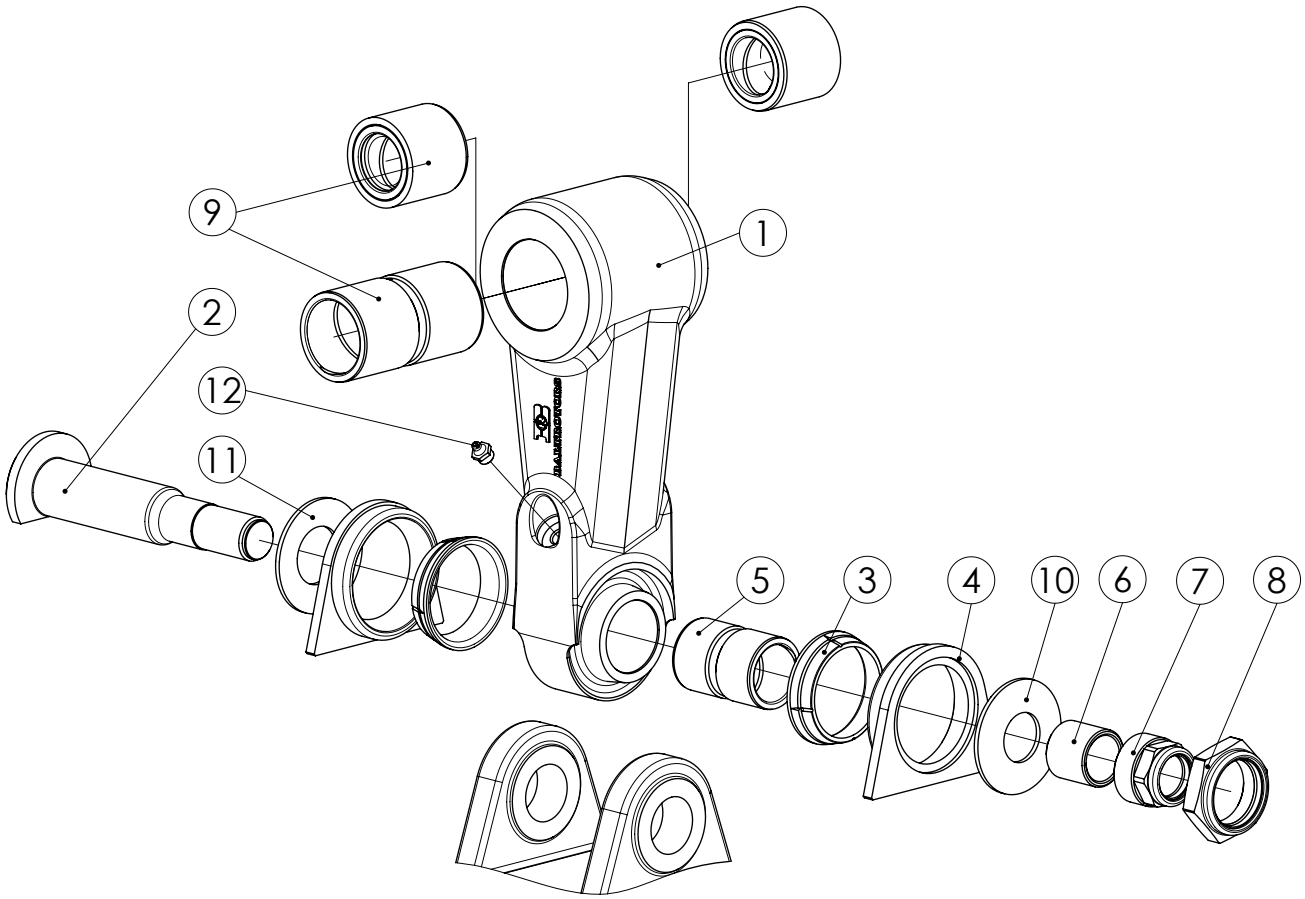

Pos.	Part No.	Description	BR 20 KS-100/45	BR 20 KS-100/40	BR 20 KS-100/35
1	BR 20 KS-100.001 LA	Link	1	1	1
2	BR 20 K.002-01	Pin	1	1	1
3	BR 20 K.003-01	Brake cone	2	2	2
4	BR 20 K.004-01	Pusher cone	2	2	2
5	BR 20 K.005	Bushing	1	1	1
6	BR 20K.006	Pusher	1	1	1
7	BR 20K.007-01	Adjustment nut	1	1	1
8	BR 20 K.008-01	Locknut	1	1	1
9	BR 30 K.009	Bushing	1	-	-
	BR 30 K.010		-	1	-
	BR 30 KS.01		-	-	2
10	Cat. No. 4382	Disc spring	1	1	1
11	Cat. No. 4383	Disc spring	1	1	1
12	1.2.C6	Grease nipple	2	2	2

BALTROTORS
Instituta Street - 1, Salaspils. Riga region, LATVIA LV-2169
Phone: +(371) 67 981074, Fax: +(371) 67 981075
E-mail: baltrotors@baltrotors.lv

Swing damper BR 20 KSC

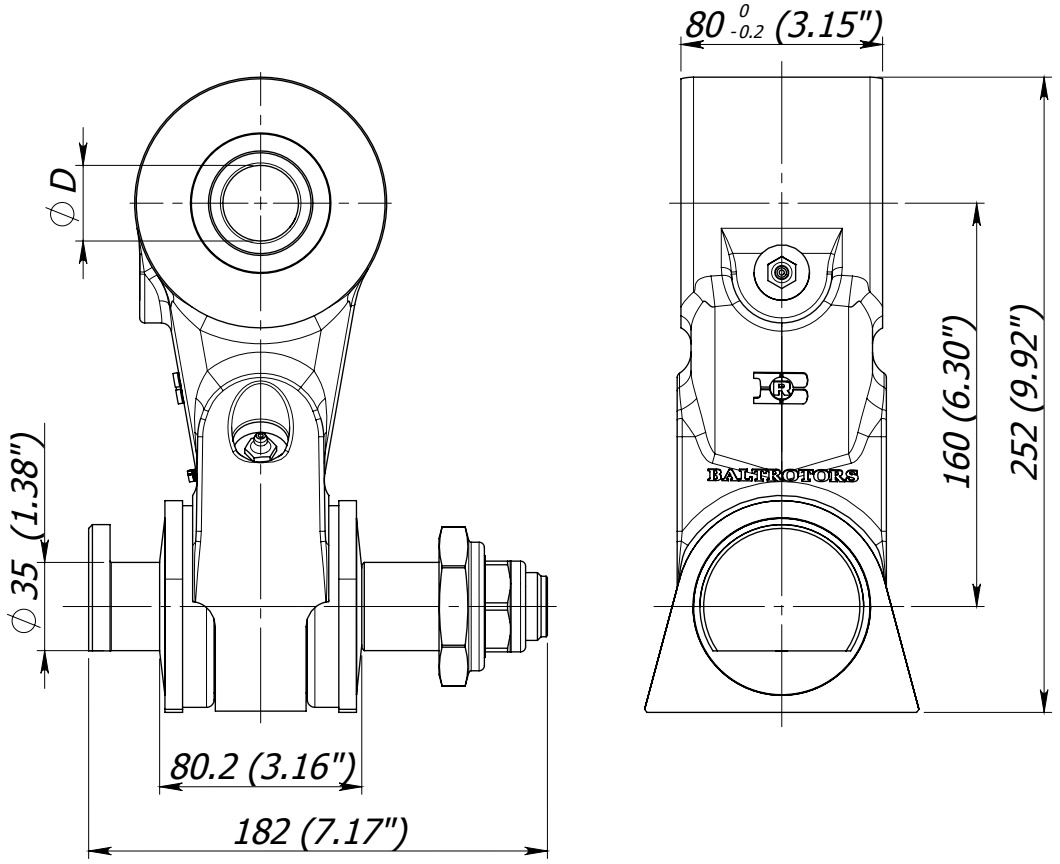

Link	Diameter D (mm)	Weight (kg)
BR 20 KSC/45	45 (1.77")	11.16 (24.60 lb)
BR 20 KSC/40	40 (1.57")	11.39 (25.11lb)
BR 20 KSC/35	35 (1.38")	11.50 (25.35 lb)
BR 20 KSC/30	30 (1.18")	11.65 (25.68 lb)

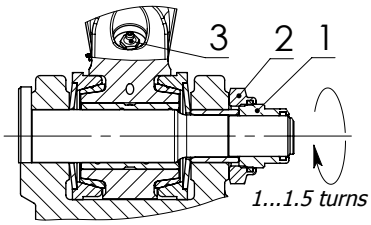

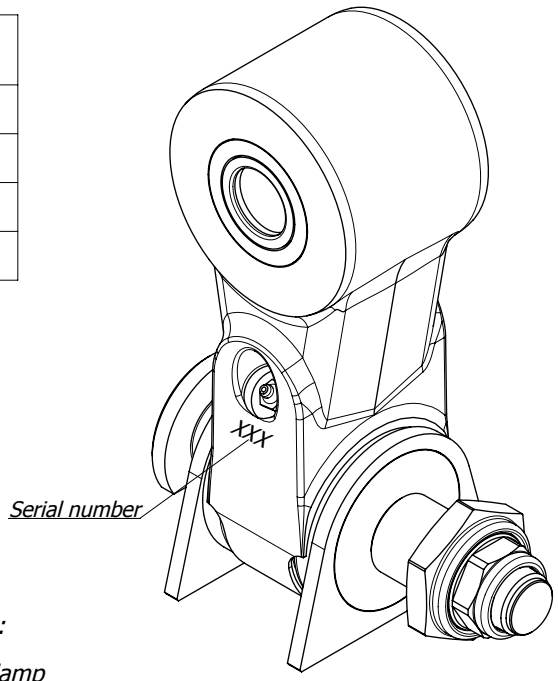

Instruction manual

To adjust the brake of the link, following actions have to be done:

- *release the lock nut (pos.2)*
- *twist the adjusting nut (pos.1) until the disc spring starts to clamp*
- *tighten the adjusting nut (pos.1) at 1...1.5 turns, that will provide braking moment of 200...250 Nm (148...185 lb ft)*
- *tighten the lock nut (pos.2) with tightening torque 100 Nm (74 lb ft).*

Greasing of lower slide bearing and brake cones is already done through lubricating nipple (pos.3). Fill grease Starplex EP 2 until it will appear to the external surfaces.
Greasing must be repeated after every 8 working hours of the link.
NOTICE! The link is delivered ungreased. It should be well greased before taking into exploitation.

2007.10.18.

BALTROTORS
Instituta Street - 1, Salaspils. Riga region, LATVIA LV-2169
Phone: +(371) 67 981074, Fax: +(371) 67 981075
E-mail: baltrotors@baltrotors.lv

Swing damper BR 20 KSC

List of parts

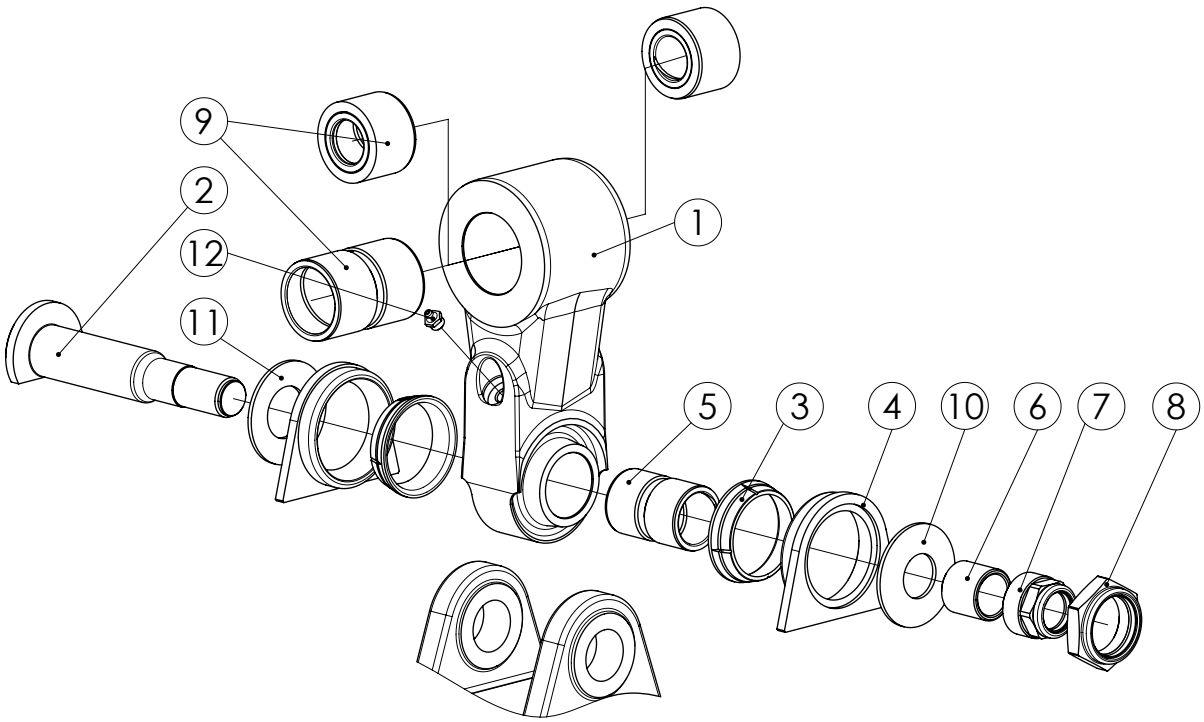

Pos.	Part No.	Description	BR 20 KSC/45	BR 20 KSC/40	BR 20 KSC/35	BR 20 KSC/30
1	BR 20 KSC.001 LA	Link	1	1	1	1
2	BR 20 K.002-01	Pin	1	1	1	1
3	BR 20 K.003-01	Brake cone	2	2	2	2
4	BR 20 K.004-01	Pusher cone	2	2	2	2
5	BR 20 K.005	Bushing	1	1	1	1
6	BR 20K.006	Pusher	1	1	1	1
7	BR 20K.007-01	Adjustment nut	1	1	1	1
8	BR 20 K.008-01	Locknut	1	1	1	1
9	BR 20 K.009	Bushing	1	-	-	-
	BR 20 K.010		-	1	-	-
	BR 20 K.01		-	-	2	-
	BR 20 K.02		-	-	-	2
10	Cat. No. 4382	Disc spring	1	1	1	1
11	Cat. No. 4383	Disc spring	1	1	1	1
12	1.2.C6	Grease nipple	2	2	2	2

2007.10.18.

BALTROTORS

Instituta Street - 1, Salaspils. Riga region, LATVIA LV-2169
Phone: +(371) 67 981074, Fax: +(371) 67 981075
E-mail: baltrotors@baltrotors.lv

Swing damper BR 30 KS

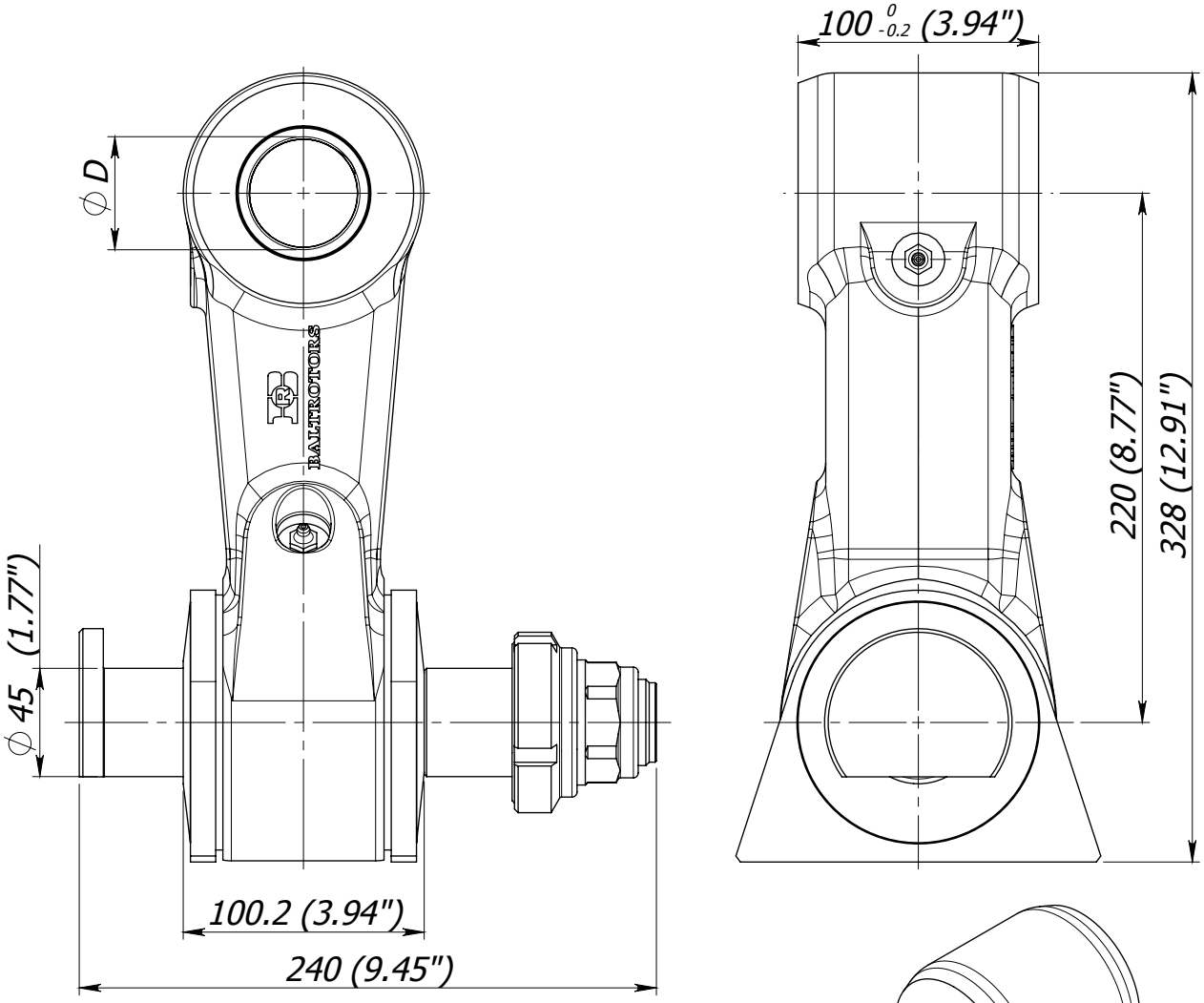

Link	Diameter D (mm)	Weight (kg)
BR 30 KS/45	45 (1.77")	20.39 (44.95 lb)
BR 30 KS/40	40 (1.57")	20.65 (45.52 lb)
BR 30 KS/35	35 (1.38")	20.78 (45.81 lb)

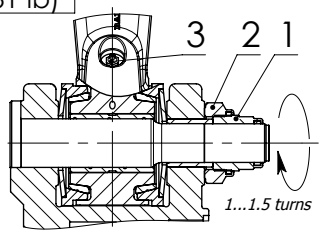

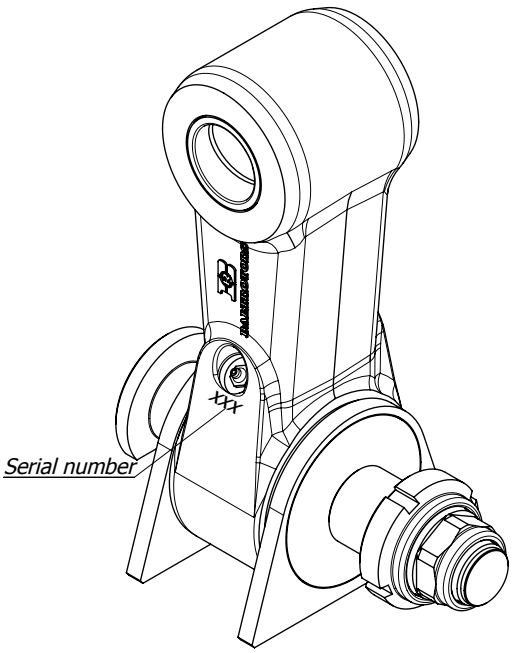

Instruction manual

To adjust the brake of the link, following actions have to be done:

- *release the lock nut (pos.2)*
- *twist the adjusting nut (pos.1) until the disc spring starts to clamp*
- *tighten the adjusting nut (pos.1) at 1...1.5 turns, that will provide braking moment of 200...250 Nm (148...185 lb ft)*
- *tighten the lock nut (pos.2) with tightening torque 100 Nm (74 lb ft).*

Greasing of lower slide bearing and brake cones is already done through lubricating nipple (pos.3). Fill grease Starplex EP 2 until it will appear to the external surfaces.
Greasing must be repeated after every 8 working hours of the link.
NOTICE! The link is delivered ungreased. It should be well greased before taking into exploitation.

2007.10.18.

BALTROTORS
Instituta Street - 1, Salaspils. Riga region, LATVIA LV-2169
Phone: +(371) 67 981074, Fax: +(371) 67 981075
E-mail: baltrotors@baltrotors.lv

Swing damper BR 30 KS

List of parts

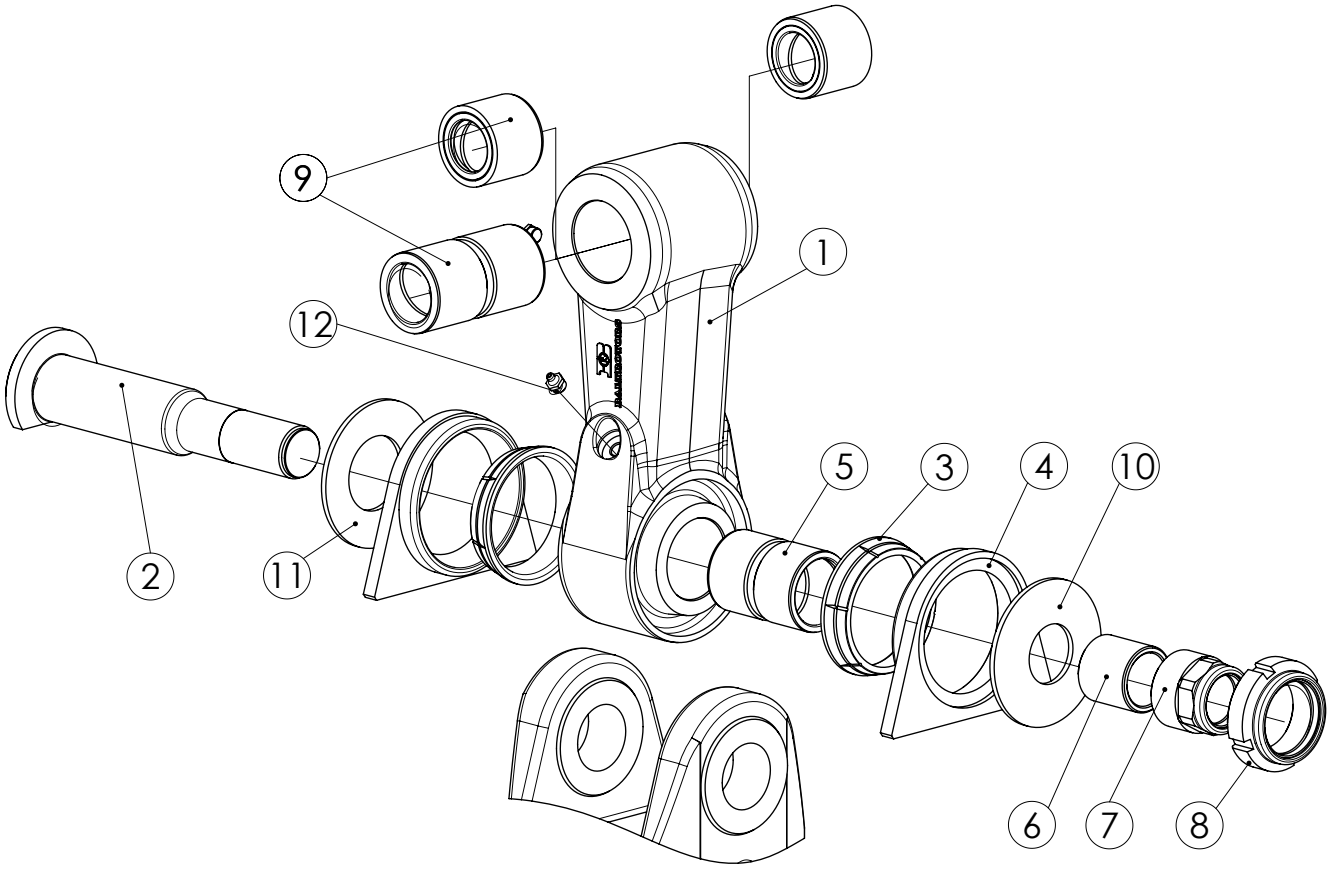

Pos.	Part No.	Description	BR 30 KS/45	BR 30 KS/40	BR 30 KS/35
1	BR 30 KS.001 LA	Link	1	1	1
2	BR 30 K.002	Pin	1	1	1
3	BR 30 K.003-01	Brake cone	2	2	2
4	BR 30 K.004-01	Pusher cone	2	2	2
5	BR 30 K.005	Bushing	1	1	1
6	BR 22 KS.006-02	Pusher	1	1	1
7	BR 30 K.007	Adjustment nut	1	1	1
8	BR 30 K.008	Locknut	1	1	1
9	BR 30 K.009	Bushing	1	-	-
	BR 30 K.010		-	1	-
	BR 30 KS.01		-	-	2
10	Cat. no. 4407	Disc spring	1	1	1
11	Cat. no. 4403	Disc spring	1	1	1
12	1.2.C6	Grease nipple	2	2	2

2007.10.18.

BALTROTORS

Instituta Street - 1, Salaspils. Riga region, LATVIA LV-2169
Phone: +(371) 67 981074, Fax: +(371) 67 981075
E-mail: baltrotors@baltrotors.lv

Swing damper BR 30 KS-80

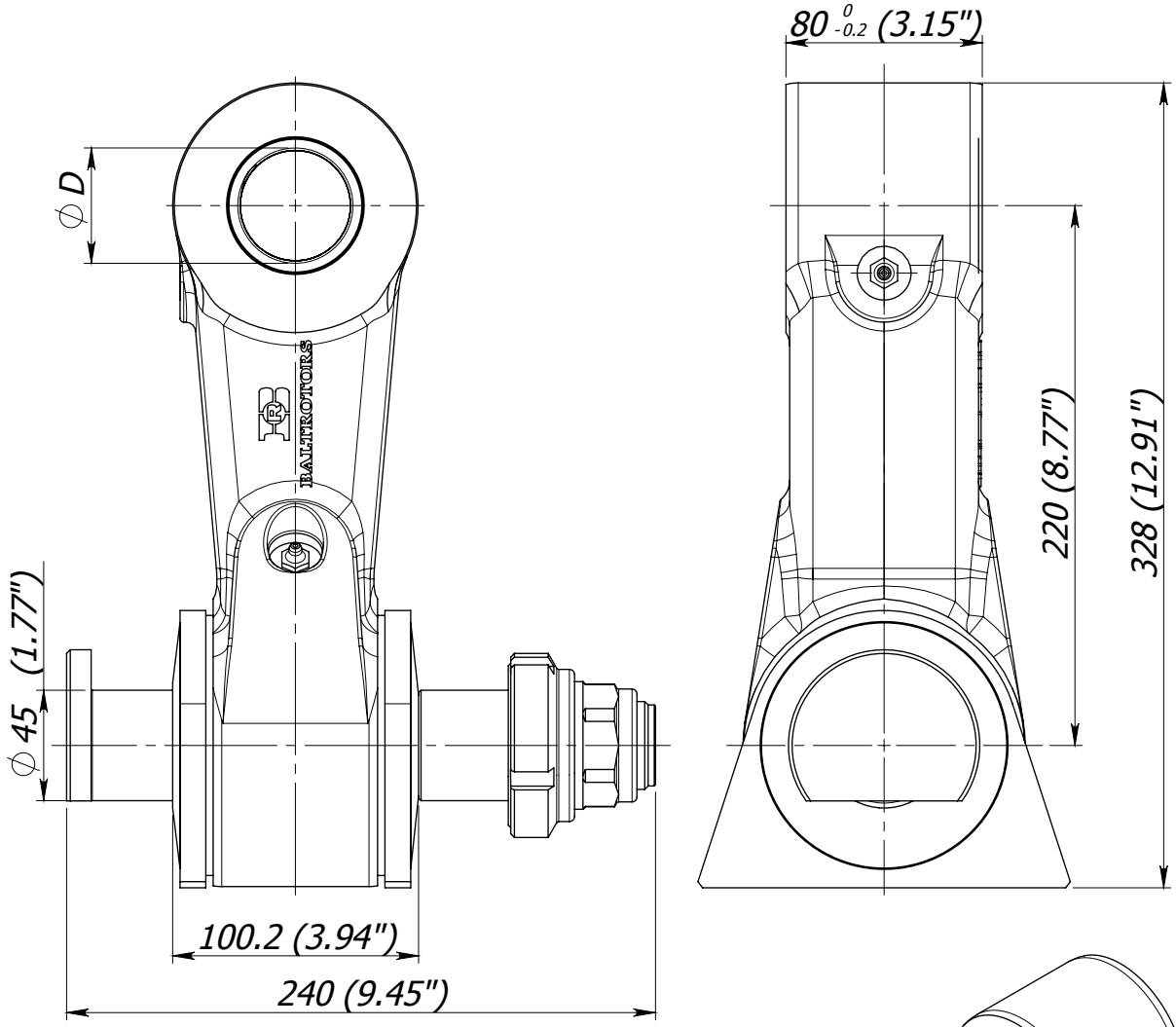

Link	Diameter D (mm)	Weight (kg)
BR 30 KS-80/45	45 (1.77")	19.52 (43.03 lb)
BR 30 KS-80/40	40 (1.57")	19.73 (43.50 lb)
BR 30 KS-80/35	35 (1.38")	19.90 (43.87 lb)

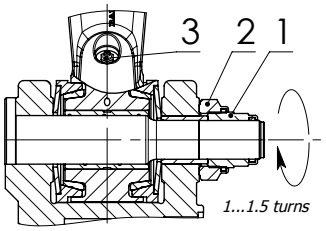

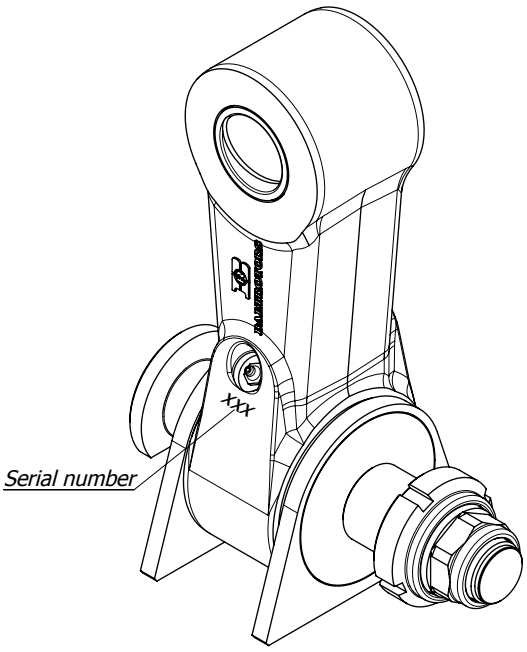

Instruction manual

To adjust the brake of the link, following actions have to be done:

- *release the lock nut (pos.2)*
- *twist the adjusting nut (pos.1) until the disc spring starts to clamp*
- *tighten the adjusting nut (pos.1) at 1...1.5 turns, that will provide braking moment of 200...250 Nm (148...185 lb ft)*
- *tighten the lock nut (pos.2) with tightening torque 100 Nm 74 lb ft).*

Greasing of lower slide bearing and brake cones is already done through lubricating nipple (pos.3). Fill grease Starplex EP 2 until it will appear to the external surfaces.
Greasing must be repeated after every 8 working hours of the link.
NOTICE! The link is delivered ungreased. It should be well greased before taking into exploitation.

2007.10.18.

BALTROTORS
Instituta Street - 1, Salaspils. Riga region, LATVIA LV-2169
Phone: +(371) 67 981074, Fax: +(371) 67 981075
E-mail: baltrotors@baltrotors.lv

Swing damper BR 30 KS-80

List of parts

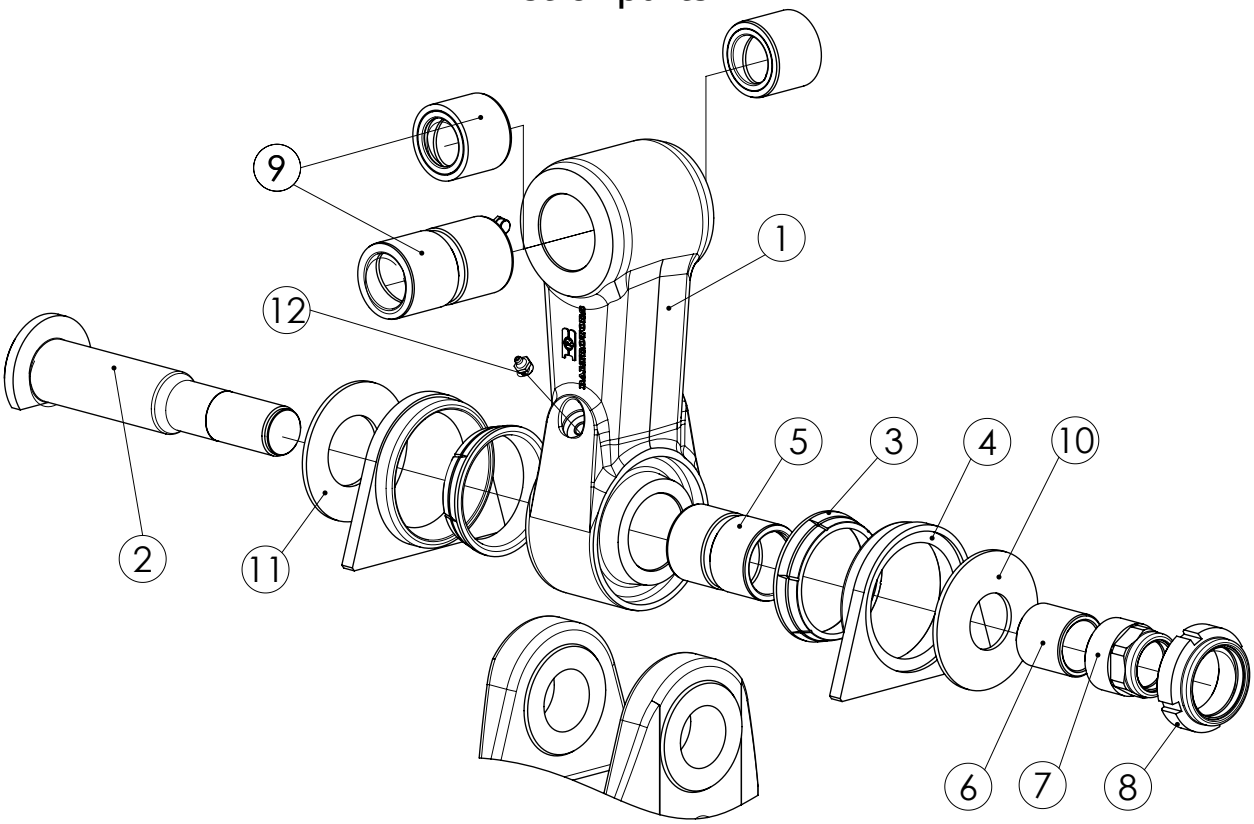

Pos.	Part No.	Designation	BR 30 KS-80/45	BR 30 KS-80/40	BR 30 KS-80/35
1	BR 30 KS-80.001 LA	Link	1	1	1
2	BR 30 K.002	Pin	1	1	1
3	BR 30 K.003-01	Brake cone	2	2	2
4	BR 30 K.004-01	Pusher cone	2	2	2
5	BR 30 K.005	Bushing	1	1	1
6	BR 22 KS.006-02	Pusher	1	1	1
7	BR 30 K.007	Adjustment nut	1	1	1
8	BR 30 K.008	Locknut	1	1	1
9	BR 20 K.009	Bushing	1	-	-
	BR 20 K.010		-	1	-
	BR 20 K.01		-	-	2
10	Cat. no. 4403	Disc spring	1	1	1
11	Cat. no. 4407	Disc spring	1	1	1
12	1.2.C6	Grease nipple	2	2	2

2007.10.18.

BALTROTORS

Instituta Street - 1, Salaspils. Riga region, LATVIA LV-2169
Phone: +(371) 67 981074, Fax: +(371) 67 981075
E-mail: baltrotors@baltrotors.lv

Dual swing damper BR 22 KS

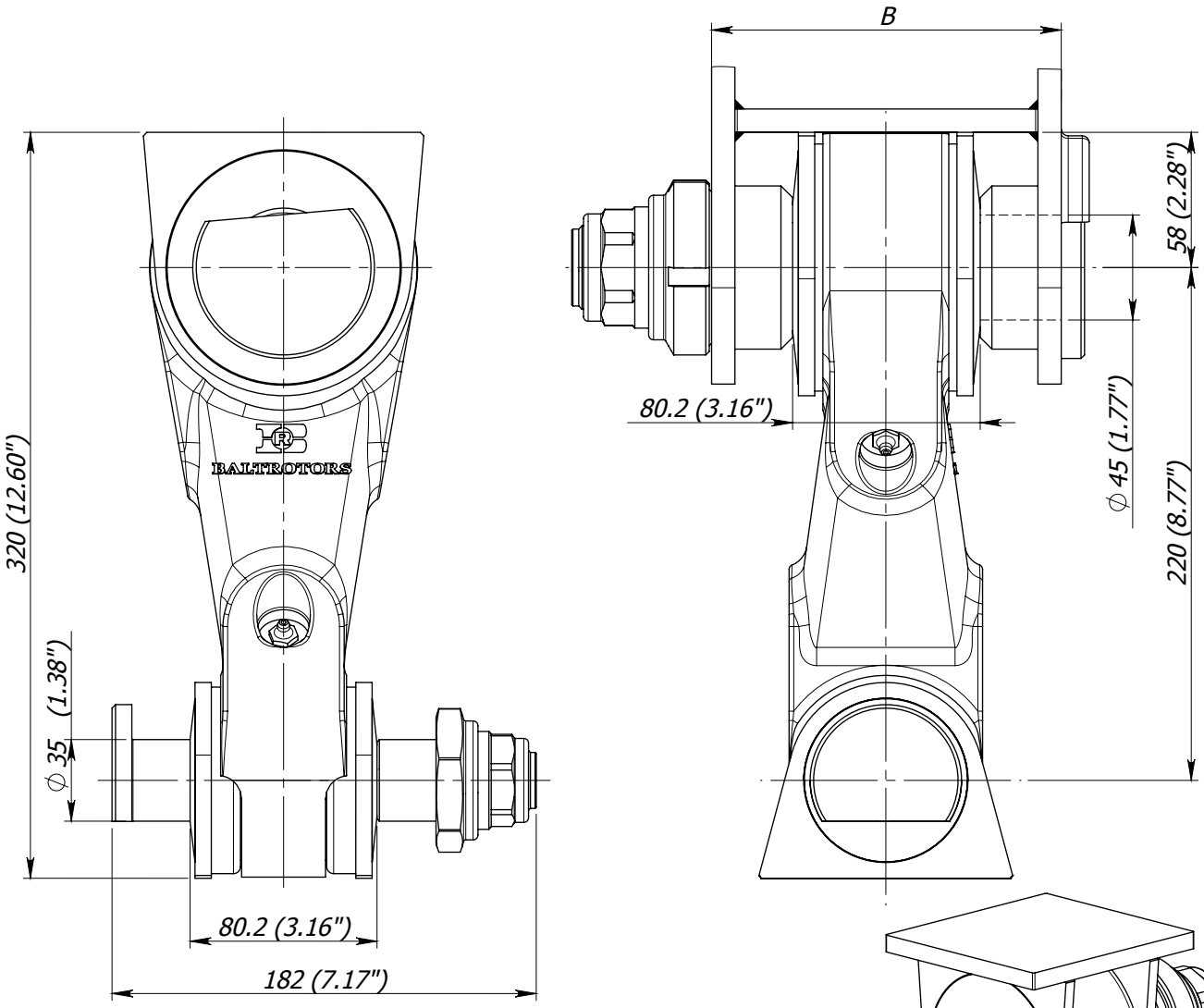

Link	Crane nose outer width B (mm)	Weight (kg)
BR 22 KS/170	170 (6.69")	17.78 (39.20 lb)
BR 22 KS/160	160 (6.29")	17.65 (38.91 lb)
BR 22 KS/150	150 (5.90")	17.53 (38.64 lb)
BR 22 KS/140	140 (5.51")	17.40 (38.36 lb)
BR 22 KS/130	130 (5.12")	17.28 (38.09 lb)
BR 22 KS/120	120 (4.72")	17.15 (37.80 lb)
BR 22 KS/110	110 (4.33")	17.03 (37.54 lb)

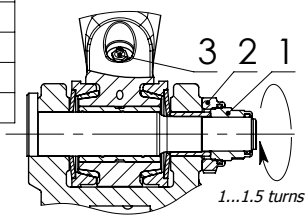

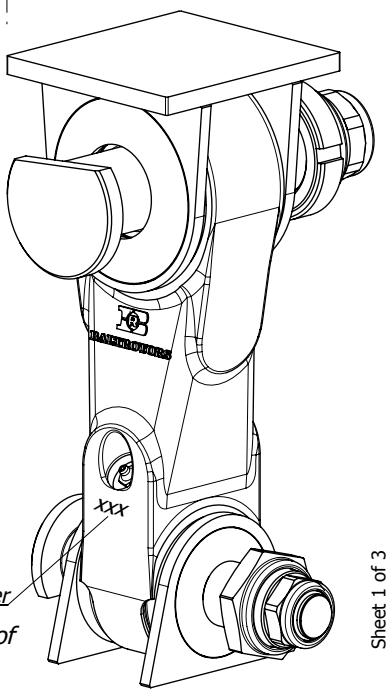

It is possible to change size B by client's reguest

Instruction manual

To adjust the brake of the link, following actions have to be done:

- *release the lock nut (pos.2)*
- *twist the adjusting nut (pos.1) until the disc spring starts to clamp*
- *tighten the adjusting nut (pos.1) at 1...1.5 turns, that will provide braking moment of 200...250 Nm (148...185 lb ft)*
- *tighten the lock nut (pos.2) with tightening torque 100 Nm (74 lb ft).*

Greasing of lower slide bearing and brake cones is already done through lubricating nipple (pos.3). Fill grease
Starplex EP 2 until it will appear to the external surfaces.
Greasing must be repeated after every 8 working hours of the link.
NOTICE! The link is delivered ungreased. It should be well greased before taking into exploitation.

BALTROTORS
Instituta Street - 1, Salaspils. Riga region, LATVIA LV-2169
Phone: +(371) 67 981074, Fax: +(371) 67 981075
E-mail: baltrotors@baltrotors.lv

Dual swing damper BR 22 KS

List of parts

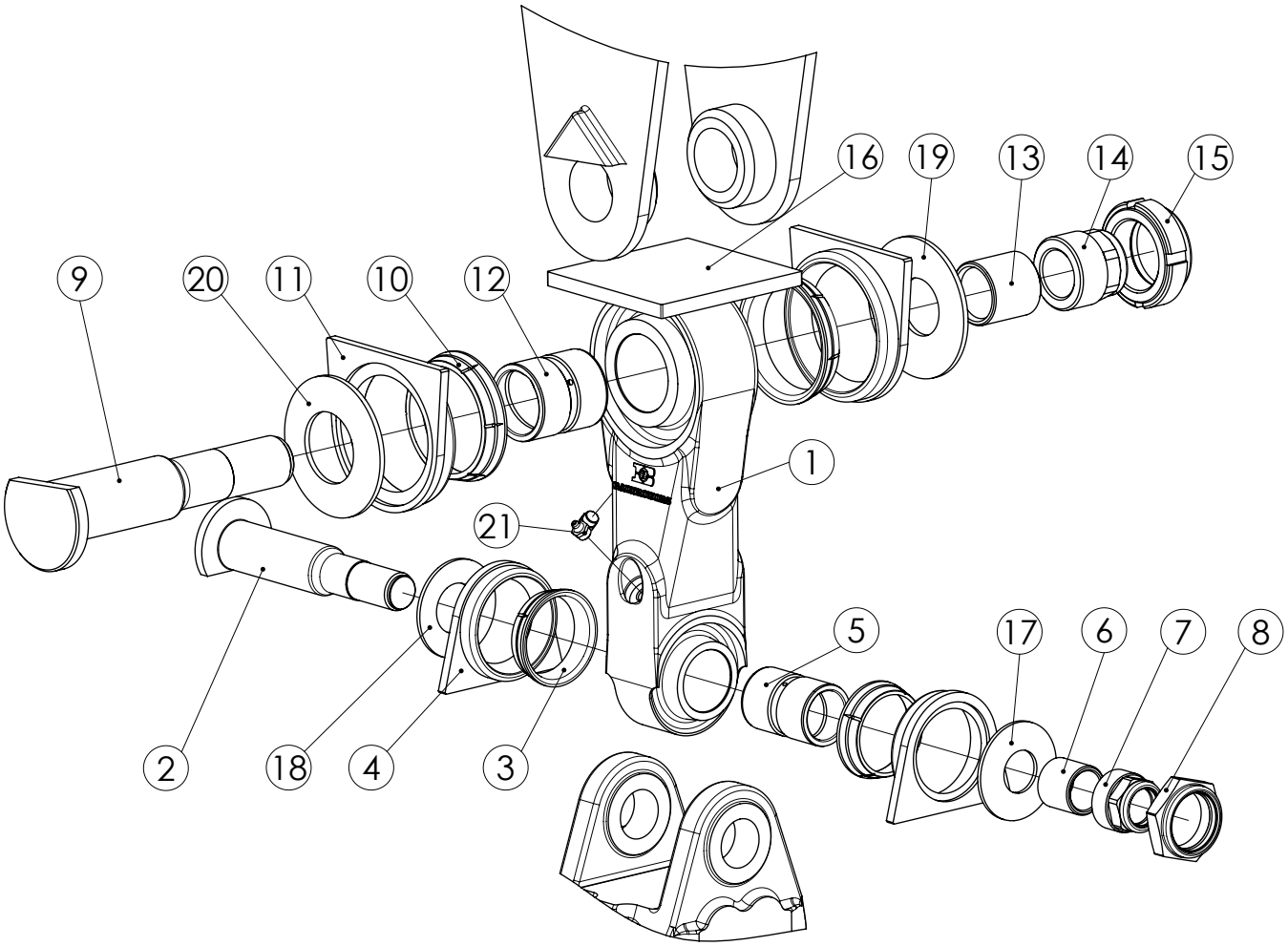

BALTROTORS
Instituta Street - 1, Salaspils. Riga region, LATVIA LV-2169
Phone: +(371) 67 981074, Fax: +(371) 67 981075
E-mail: baltrotors@baltrotors.lv

Dual swing damper BR 22 KS

List of parts

Pos.	Part No.	Description	BR 22 KS/170	BR 22 KS/160	BR 22 KS/150	BR 22 KS/140	BR 22 KS/130	BR 22 KS/120	BR 22 KS/110
1	BR 22 KS.001 LA	Link	1	1	1	1	1	1	1
2	BR 20 K.002-01	Pin	1	1	1	1	1	1	1
3	BR 20 K.003-01	Brake cone	2	2	2	2	2	2	2
4	BR 20 K.004-01	Pusher cone	2	2	2	2	2	2	2
5	BR 20 K.005	Bushing	1	1	1	1	1	1	1
6	BR 20K.006	Pusher	1	1	1	1	1	1	1
7	BR 20K.007-01	Adjustment nut	1	1	1	1	1	1	1
8	BR 20 K.008-01	Locknut	1	1	1	1	1	1	1
9	BR 22 KS.002-04	Pin	1	-	-	-	-	-	-
	BR 22 KS.002-03		-	1	-	-	-	-	-
	BR 22 KS.002-02		-	-	1	-	-	-	-
	BR 22 KS.002-01		-	-	-	1	-	-	-
	BR 22 KS.002-06		-	-	-	-	1	-	-
	BR 22 KS.002-05		-	-	-	-	-	1	-
	BR 22 KS.002-07		-	-	-	-	-	-	1
10	BR 22 KS.003	Brake cone	2	2	2	2	2	2	2
11	BR 22 KS.004	Pusher cone	2	2	2	2	2	2	2
12	BR 22 KS.009	Bushing	1	1	1	1	1	1	1
13	BR 22 KS.006-04	Pusher	1	-	-	-	-	-	-
	BR 22 KS.006-03		-	1	-	-	-	-	-
	BR 22 KS.006-02		-	-	1	-	-	-	-
	BR 22 KS.006-01		-	-	-	1	-	-	-
	BR 22 KS.006-08		-	-	-	-	1	-	-
	BR 22 KS.006-06		-	-	-	-	-	1	-
	BR 22 KS.006-10		-	-	-	-	-	-	1
14	BR 30 K.007	Adjustment nut	1	1	1	1	1	1	1
15	BR 30 K.008	Locknut	1	1	1	1	1	1	1
16	BR 32 KS.011	Supporting plate	1	1	1	1	1	1	1
17	Cat. No. 4382	Disc spring	1	1	1	1	1	1	1
18	Cat. No. 4383	Disc spring	1	1	1	1	1	1	1
19	Cat. no. 4403	Disc spring	1	1	1	1	1	1	1
20	Cat. no. 4407	Disc spring	1	1	1	1	1	1	1
21	1.2.C6	Grease nipple	2	2	2	2	2	2	2

BALTROTORS
Instituta Street - 1, Salaspils. Riga region, LATVIA LV-2169
Phone: +(371) 67 981074, Fax: +(371) 67 981075
E-mail: baltrotors@baltrotors.lv

Dual swing damper BR 32 KS

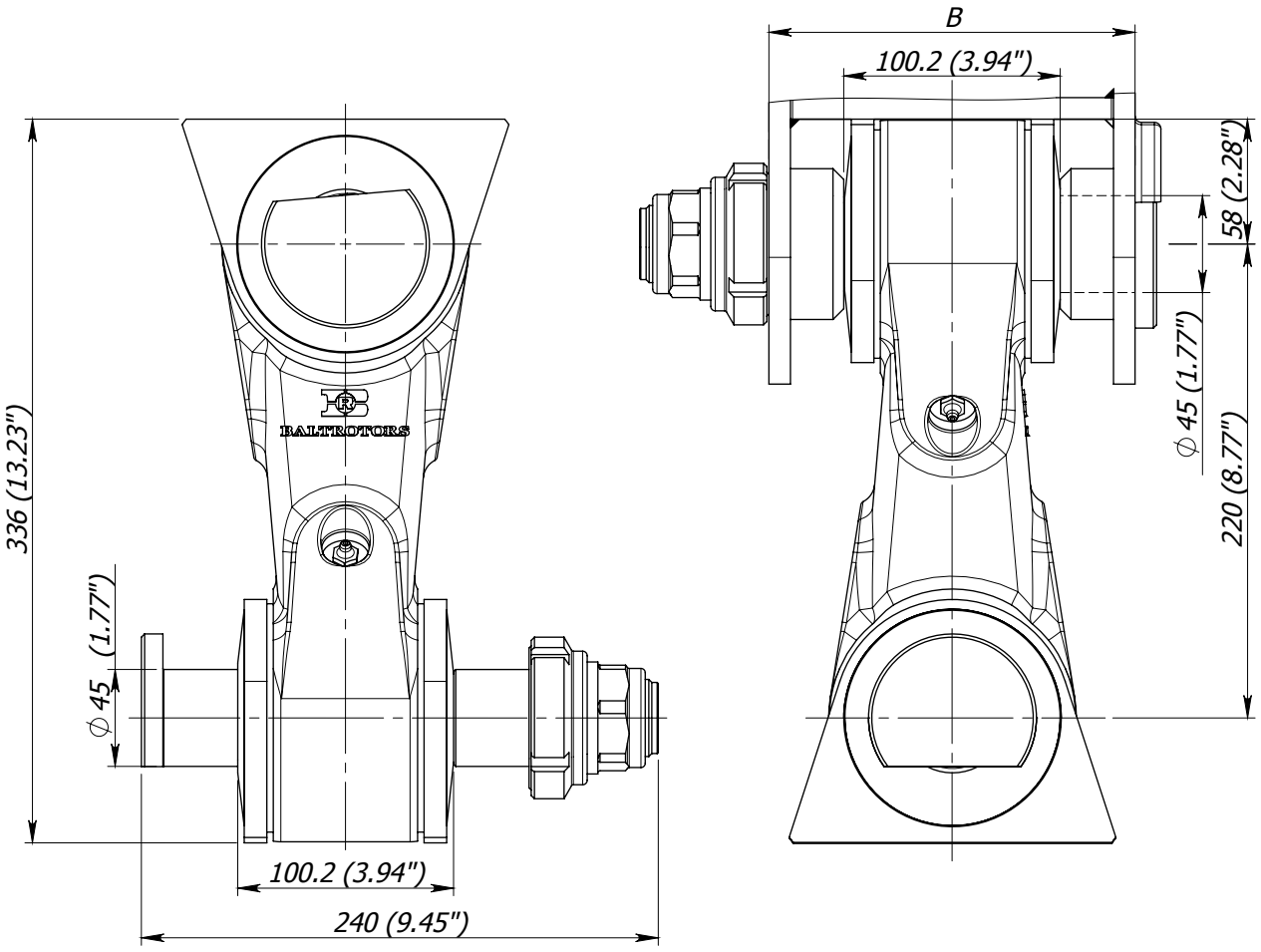

Link	Crane nose outer width B (mm)	Weight (kg)
BR 32 KS/240	240 (9.49")	26.28 (57.94lb)
BR 32 KS/230	230 (9.06")	26.15 (57.65 lb)
BR 32 KS/200	200 (7.87")	25.78 (56.84 lb)
BR 32 KS/190	190 (7.48")	25.65 (56.55 lb)
BR 32 KS/180	180 (7.09")	25.53 (56.28 lb)
BR 32 KS/170	170 (6.69")	25.40 (55.98 lb)
BR 32 KS/160	160 (6.29")	25.28 (55.73 lb)
BR 32 KS/150	150 (5.90")	25.15 (55.45 lb)
BR 32 KS/140	140 (5.51")	25.03 (55.18 lb)
BR 32 KS/130	130 (5.12")	24.90 (54.90 lb)

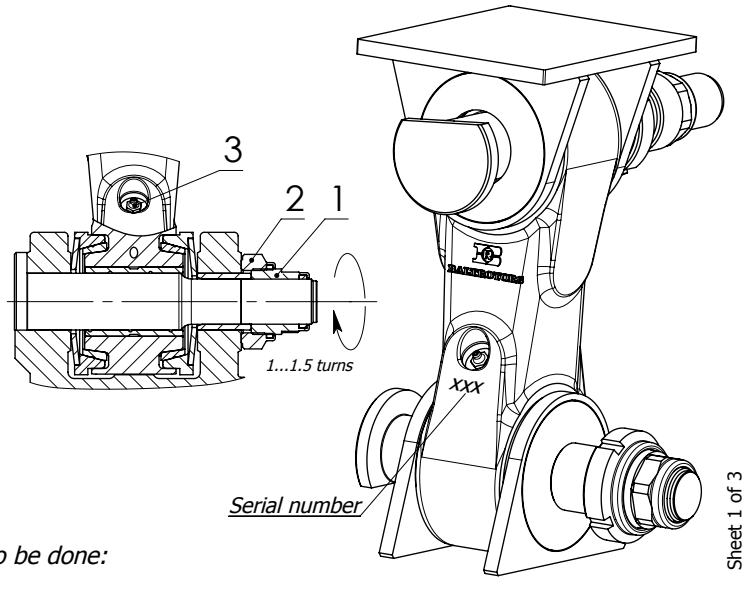

It is possible to change size B by client's reguest

Instruction manual

To adjust the brake of the link, following actions have to be done:

- *release the lock nut (pos.2)*
- *twist the adjusting nut (pos.1) until the disc spring starts to clamp*
- *tighten the adjusting nut (pos.1) at 1...1.5 turns, that will provide braking moment of 200...250 Nm (148...185 lb ft)*
- *tighten the lock nut (pos.2) with tightening torque 100 Nm (74 lb ft).*

Greasing of lower slide bearing and brake cones is already done through lubricating nipple (pos.3). Fill grease Starplex EP 2 until it will appear to the external surfaces.
Greasing must be repeated after every 8 working hours of the link.
NOTICE! The link is delivered ungreased. It should be well greased before taking into exploitation.

2007.10.18.

BALTROTORS
Instituta Street - 1, Salaspils. Riga region, LATVIA LV-2169
Phone: +(371) 67 981074, Fax: +(371) 67 981075
E-mail: baltrotors@baltrotors.lv

Dual swing damper BR 32 KS

List of parts

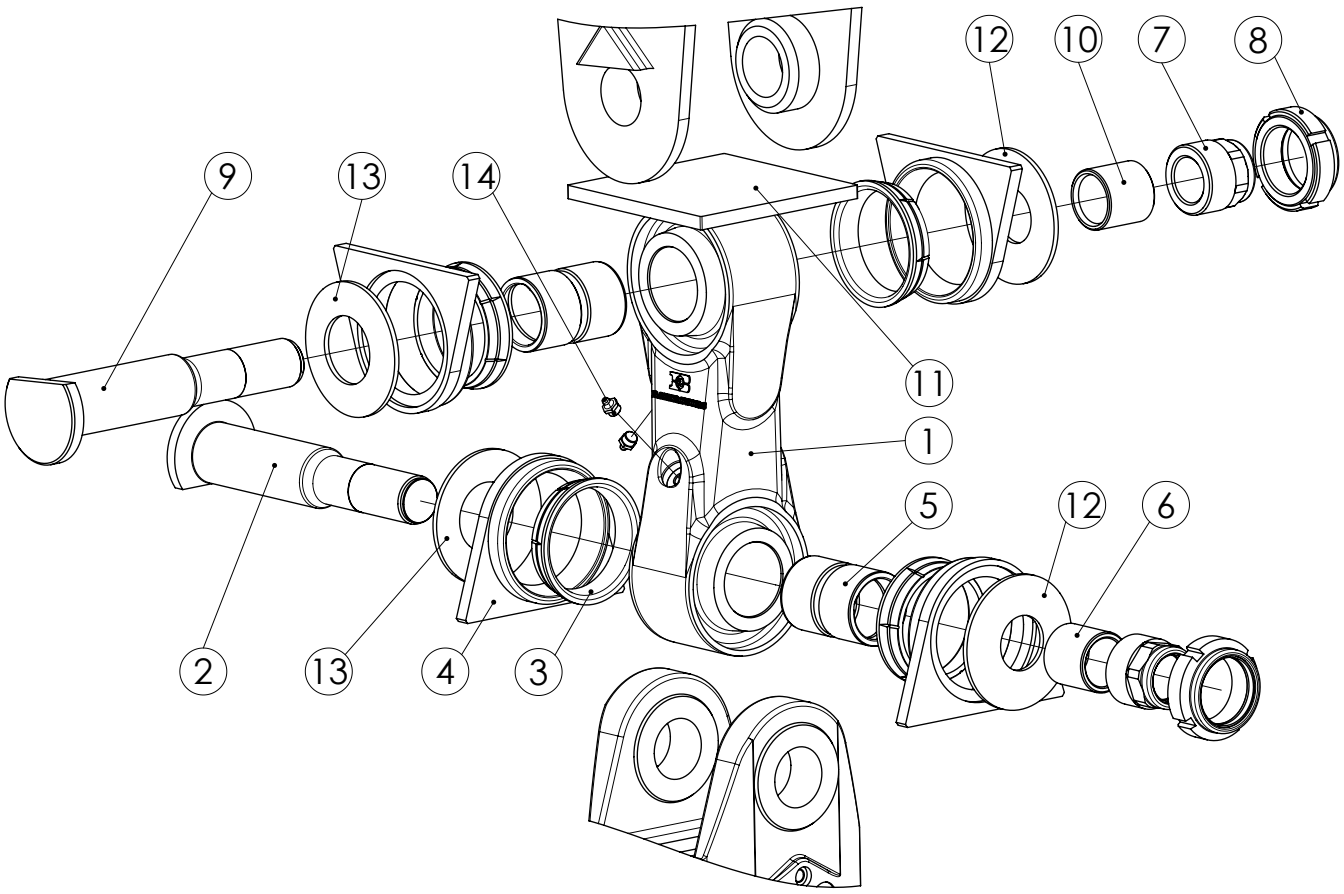

BALTROTORS

Instituta Street - 1, Salaspils. Riga region, LATVIA LV-2169
Phone: +(371) 67 981074, Fax: +(371) 67 981075
E-mail: baltrotors@baltrotors.lv

Dual swing damper BR 32 KS

List of parts

Pos.	Part No.	Description	BR 32 KS/240	BR 32 KS/230	BR 32 KS/200	BR 32 KS/190	BR 32 KS/180	BR 32 KS/170	BR 32 KS/160	BR 32 KS/150	BR 32 KS/140	BR 32 KS/130
1	BR 32 KS.001 LA	Link	1	1	1	1	1	1	1	1	1	1
2	BR 30 K.002	Pin	1	1	1	1	1	1	1	1	1	1
3	BR 30 K.003-01	Brake cone	4	4	4	4	4	4	4	4	4	4
4	BR 30 K.004-01	Pusher cone	4	4	4	4	4	4	4	4	4	4
5	BR 30 K.005	Bushing	2	2	2	2	2	2	2	2	2	2
6	BR 22 KS.006-02	Pusher	1	1	1	1	1	1	1	1	1	1
7	BR 30 K.007	Adjustment nut	2	2	2	2	2	2	2	2	2	2
8	BR 30 K.008	Locknut	2	2	2	2	2	2	2	2	2	2
9	BR 32 KS.002-04	Pin	1	-	-	-	-	-	-	-	-	-
	BR 32 KS.002-08		-	1	-	-	-	-	-	-	-	-
	BR 32 KS.002-03		-	-	1	-	-	-	-	-	-	-
	BR 32 KS.002-02		-	-	-	1	-	-	-	-	-	-
	BR 32 KS.002-01		-	-	-	-	1	-	-	-	-	-
	BR 30 K.002		-	-	-	-	-	1	-	-	-	-
	BR 32 KS.002-07		-	-	-	-	-	-	1	-	-	-
	BR 32 KS.002-06		-	-	-	-	-	-	-	1	-	-
	BR 32 KS.002-05		-	-	-	-	-	-	-	-	1	-
	BR 32 KS.002-09		-	-	-	-	-	-	-	-	-	1
10	BR 22 KS.006-07	Pusher	1	-	-	-	-	-	-	-	-	-
	BR 22 KS.006-09		-	1	-	-	-	-	-	-	-	-
	BR 22 KS.006-05		-	-	1	-	-	-	-	-	-	-
	BR 22 KS.006-04		-	-	-	1	-	-	-	-	-	-
	BR 22 KS.006-03		-	-	-	-	1	-	-	-	-	-
	BR 22 KS.006-02		-	-	-	-	-	1	-	-	-	-
	BR 22 KS.006-01		-	-	-	-	-	-	1	-	-	-
	BR 22 KS.006-08		-	-	-	-	-	-	-	1	-	-
	BR 22 KS.006-06		-	-	-	-	-	-	-	-	1	-
	BR 22 KS.006-10		-	-	-	-	-	-	-	-	-	1
11	BR 32 KS.011	Supporting plate	1	1	1	1	1	1	1	1	1	1
12	Cat. no. 4403	Disc spring	2	2	2	2	2	2	2	2	2	2
13	Cat. no. 4407	Disc spring	2	2	2	2	2	2	2	2	2	2
14	1.2.C6	Grease nipple	2	2	2	2	2	2	2	2	2	2

BALTROTORS
Instituta Street - 1, Salaspils. Riga region, LATVIA LV-2169
Phone: +(371) 67 981074, Fax: +(371) 67 981075
E-mail: baltrotors@baltrotors.lv

Hydraulic brake link **BRH 30**

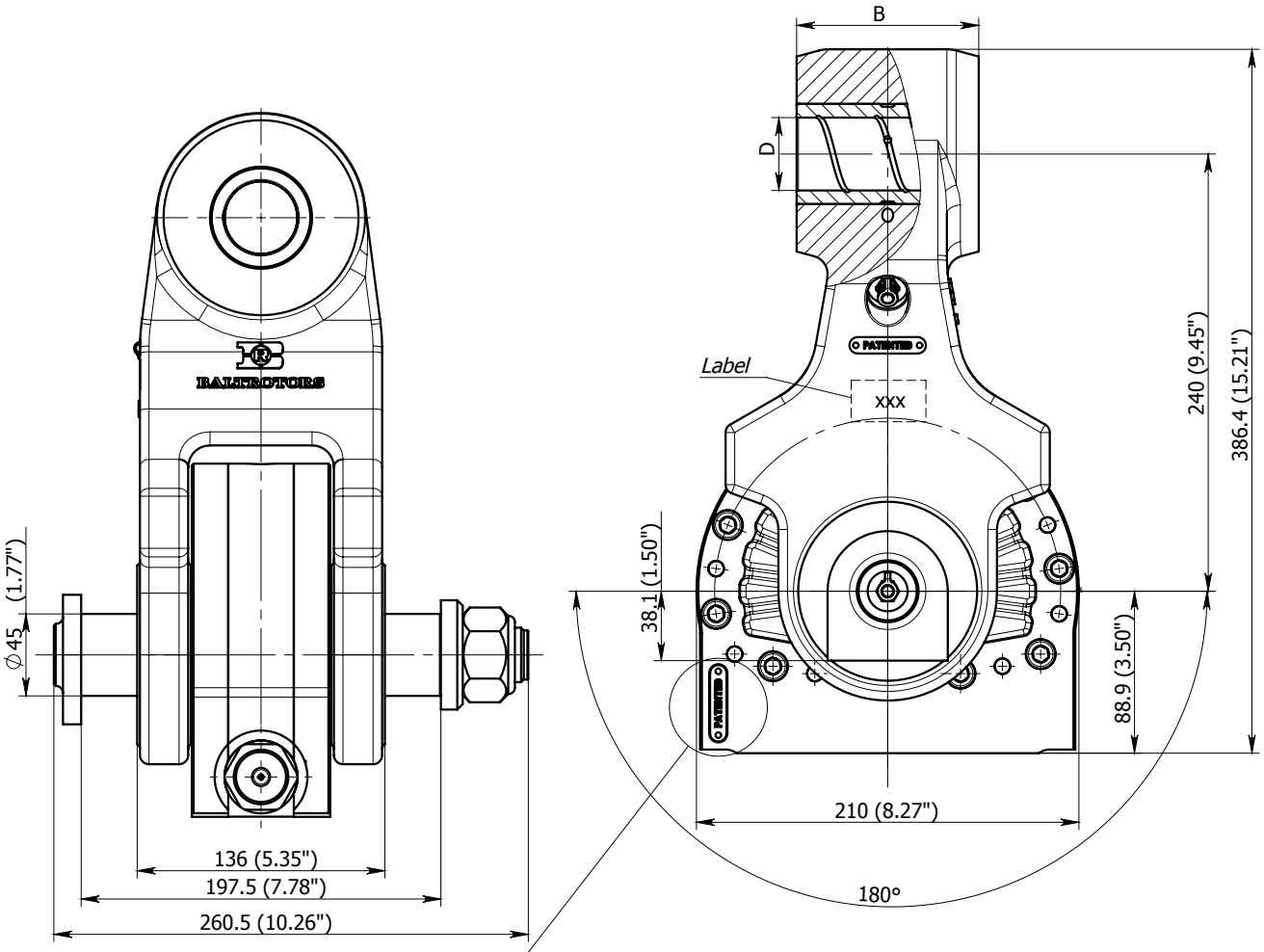

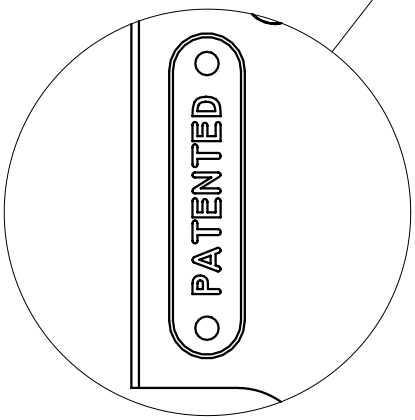

Dimensions			
Crane nose pivot pin diameter ∅ D (mm)	**Link width B(mm)**		
	$125^{0}_{-0.2}$ (4.92")	**$100^{0}_{-0.2}$ (3.94")**	**$80^{0}_{-0.2}$ (3.15")**
45 (1.77")	BRH 30/125/45	BRH 30/100/45	BRH 30/80/45
40 (1.57")	-	BRH 30/100/40	BRH 30/80/40
35 (1.38")	-	BRH 30/100/35	BRH 30/80/35

Technical data

Max load, KN	160 (35969 lbf)
Max braking torque, Nm	800 (592 lb ft)
Weight, kg	41 ± 1 (90.39 ± 2.20 lb)

Fill grease Starplex EP 2, through lubricating nipple (pos. 9), until it will appear to the external surfaces. Greasing must be repeated after every 8 working hours of the link.

BALTROTORS
Instituta Street - 1, Salaspils. Riga region, LATVIA LV-2169
Phone: +(371) 67 981074, Fax: +(371) 67 981075
E-mail: baltrotors@baltrotors.lv

Hydraulic brake link **BRH 30**

List of parts

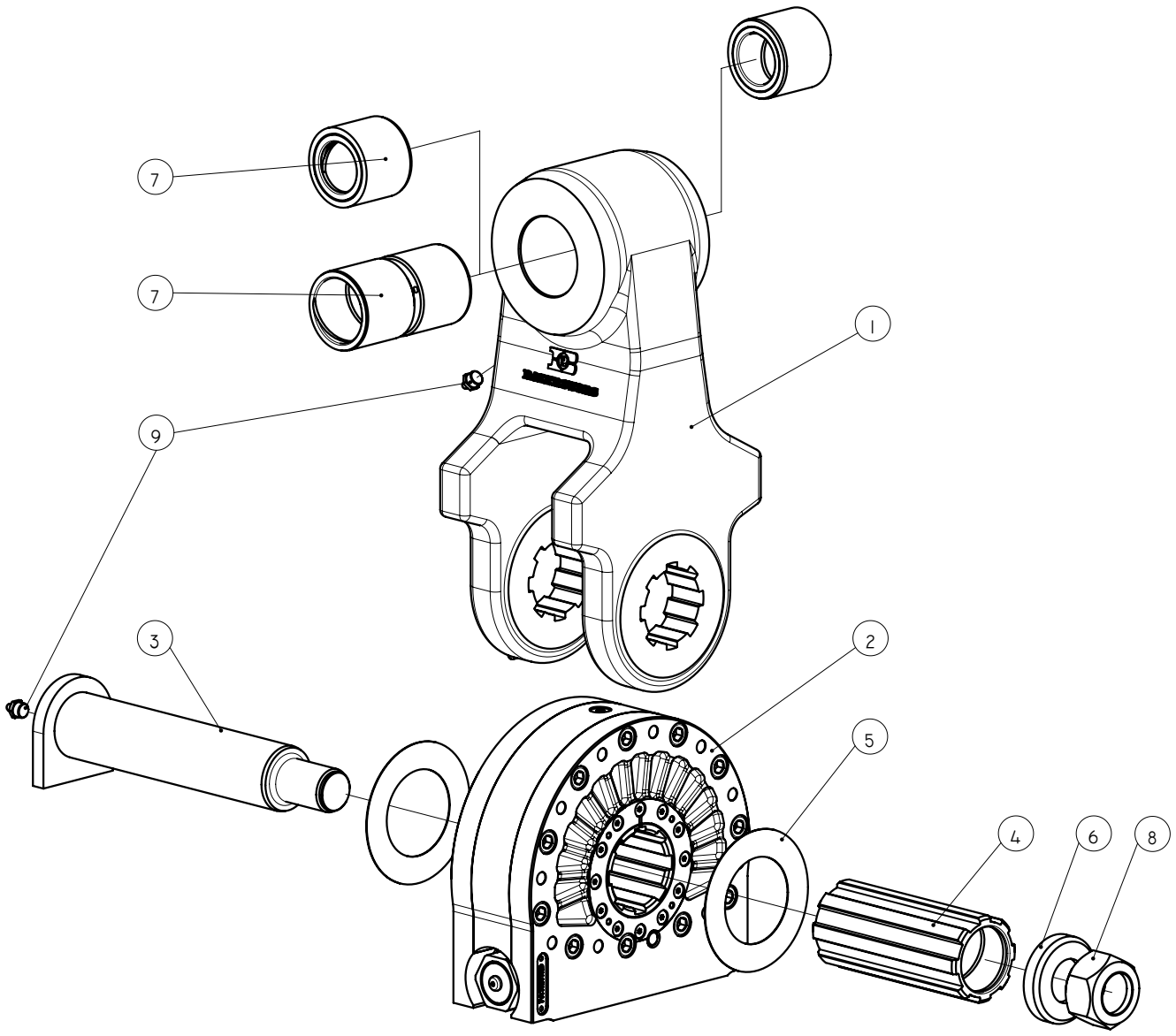

2007.10.17.

BALTROTORS

Instituta Street - 1, Salaspils. Riga region, LATVIA LV-2169
Phone: +(371) 7 981074, Fax: +(371) 7 901358; 7 981075
E-mail: baltrotors@baltrotors.lv

Hydraulic brake link **BRH 30**

List of parts

Pos.	Part	Title	BRH 30/125/45	BRH 30/100/45	BRH 30/100/40	BRH 30/100/35	BRH 30/80/45	BRH 30/80/40	BRH 30/80/35	Notes
1	BRH 30-125.001	Link	1	-	-	-	-	-	-	
	BRH 30.001-01		-	1	1	1	-	-	-	
	BRH 30-80.001		-	-	-	-	1	1	1	
2	BRH 30.01	Hydraulic brake	1	1	1	1	1	1	1	
3	BRH 30.002-01	Pin	1	1	1	1	1	1	1	
4	BRH 30.006-01	Groove connector	1	1	1	1	1	1	1	
5	BRH 30.007-02	Shim	2	2	2	2	2	2	2	
6	BR 2.003	Washer	1	1	1	1	1	1	1	
7	BR 30 K.011	Bushing	2	-	-	-	-	-	-	
	BR 30 K.009		-	1	-	-	-	-	-	
	BR 30 K.010		-	-	1	-	-	-	-	
	BR 30 KS.01		-	-	-	2	-	-	-	
	BR 20 K.009		-	-	-	-	1	-	-	
	BR 20 K.010		-	-	-	-	-	1	-	
	BR 20 K.01		-	-	-	-	-	-	2	
8	M30x1.5	Nut	1	1	1	1	1	1	1	
9	1.2.C6	Grease nipple	2	2	2	2	2	2	2	

2007.10.17.

BALTROTORS

Instituta Street - 1, Salaspils. Riga region, LATVIA LV-2169
Phone: +(371) 7 981074, Fax: +(371) 7 901358; 7 981075
E-mail: baltrotors@baltrotors.lv

Hydraulic brake link **BRH 32 KS**

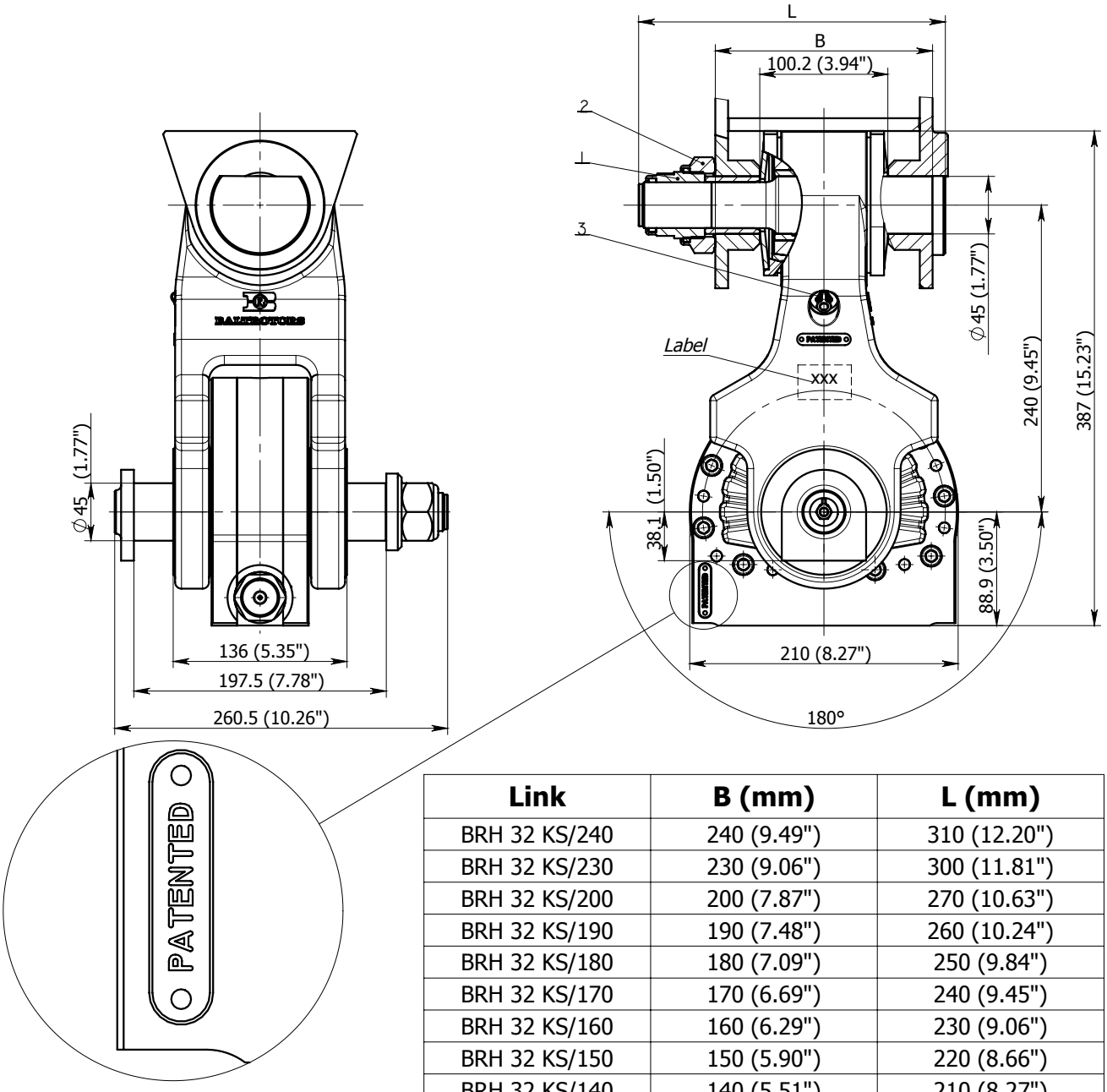

Link	B (mm)	L (mm)
BRH 32 KS/240	240 (9.49")	310 (12.20")
BRH 32 KS/230	230 (9.06")	300 (11.81")
BRH 32 KS/200	200 (7.87")	270 (10.63")
BRH 32 KS/190	190 (7.48")	260 (10.24")
BRH 32 KS/180	180 (7.09")	250 (9.84")
BRH 32 KS/170	170 (6.69")	240 (9.45")
BRH 32 KS/160	160 (6.29")	230 (9.06")
BRH 32 KS/150	150 (5.90")	220 (8.66")
BRH 32 KS/140	140 (5.51")	210 (8.27")
BRH 32 KS/130	130 (5.12")	200 (7.87")

Instruction manual for upper brake

To adjust the brake of the link, following actions have to be done:

- *release the lock nut (pos.2)*
- *twist the adjusting nut (pos.1) until the disc spring starts to clamp*
- *tighten the adjusting nut (pos.1) at 1...1.5 turns, that will provide braking moment of 200...250 Nm (148...185 lb ft)*
- *tighten the lock nut (pos.2) with tightening torque 100 Nm (74 lb ft).*

Greasing of lower slide bearing and brake cones is already done through lubricating nipple (pos.3). Fill grease Starplex EP 2 until it will appear to the external surfaces.
Greasing must be repeated after every 8 working hours of the link.
NOTICE! The link is delivered ungreased. It should be well greased before taking into exploitation.

Technical data

Max load, KN	160 (35969 lbf)
Max braking torque of the hydraulic brake, Nm	800 (592 lb ft)
Weight, kg	46 ± 1 (101.41 ± 2.20 lb)

BALTROTORS
Instituta Street - 1, Salaspils. Riga region, LATVIA LV-2169
Phone: +(371) 67 981074, Fax: +(371) 67 981075
E-mail: baltrotors@baltrotors.lv

Hydraulic brake link BRH 32 KS

List of parts

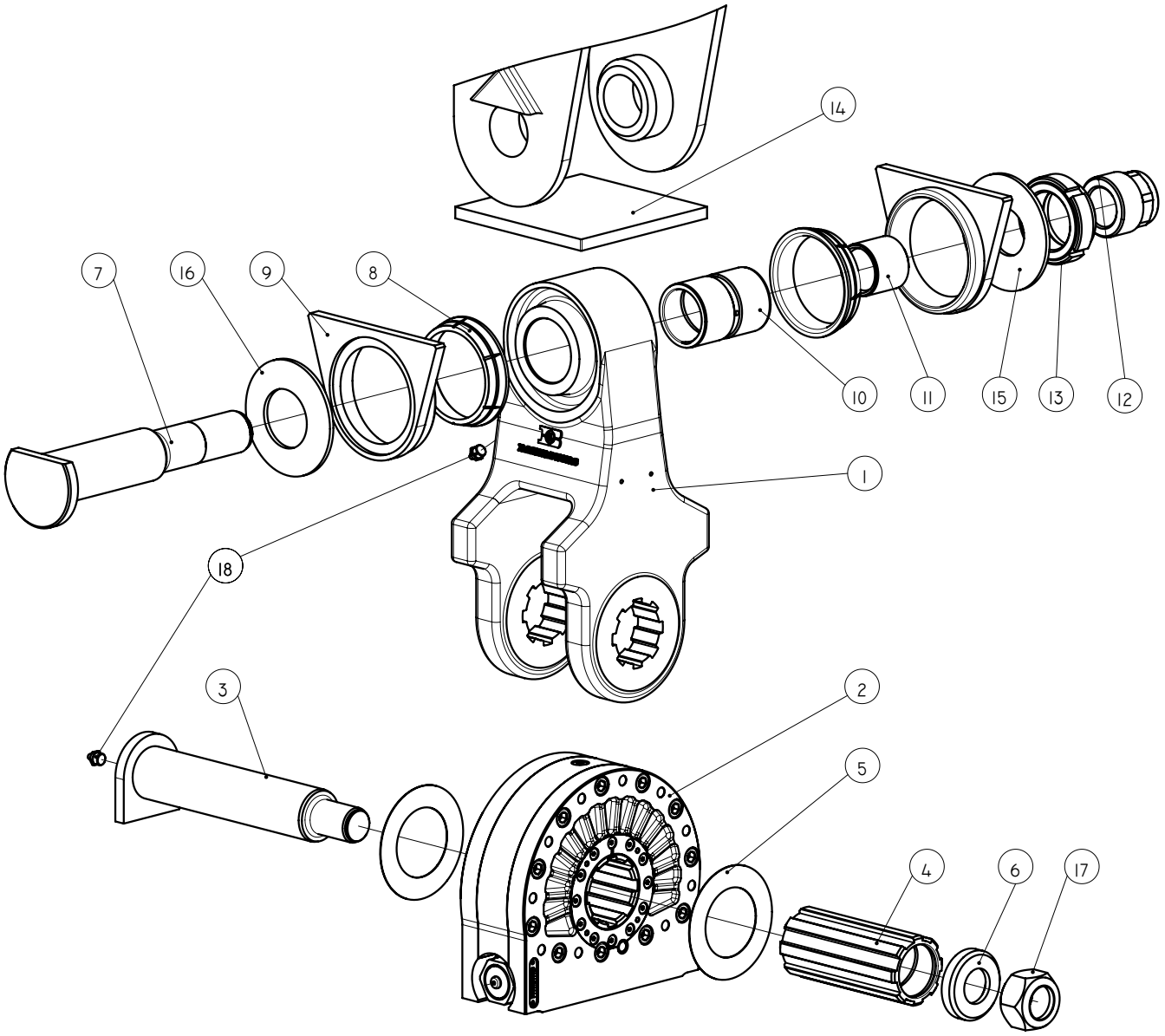

2007.11.06. Sheet 2 of 3

BALTROTORS

Instituta Street - 1, Salaspils. Riga region, LATVIA LV-2169
Phone: +(371) 67 981074, Fax: +(371) 67 981075
E-mail: baltrotors@baltrotors.lv

Hydraulic brake link **BRH 32 KS**

List of parts

Pos.	Part	Title	BRH 32 KS/240	BRH 32 KS/230	BRH 32 KS/200	BRH 32 KS/190	BRH 32 KS/180	BRH 32 KS/170	BRH 32 KS/160	BRH 32 KS/150	BRH 32 KS/140	BRH 32 KS/130	Notes
1	BRH 32 KS.001	Link	1	1	1	1	1	1	1	1	1	1	
2	BRH 30.01	Hydraulic brake	1	1	1	1	1	1	1	1	1	1	
3	BRH 30.002-01	Pin	1	1	1	1	1	1	1	1	1	1	
4	BRH 30.006-01	Groove connector	1	1	1	1	1	1	1	1	1	1	
5	BRH 30.007-02	Shim	2	2	2	2	2	2	2	2	2	2	
6	BR 2.003	Washer	1	1	1	1	1	1	1	1	1	1	
7	BR 32 KS.002-04	Pin	1	-	-	-	-	-	-	-	-	-	
	BR 32 KS.002-08		-	1	-	-	-	-	-	-	-	-	
	BR 32 KS.002-03		-	-	1	-	-	-	-	-	-	-	
	BR 32 KS.002-02		-	-	-	1	-	-	-	-	-	-	
	BR 32 KS.002-01		-	-	-	-	1	-	-	-	-	-	
	BR 30 K.002		-	-	-	-	-	1	-	-	-	-	
	BR 32 KS.002-07		-	-	-	-	-	-	1	-	-	-	
	BR 32 KS.002-06		-	-	-	-	-	-	-	1	-	-	
	BR 32 KS.002-05		-	-	-	-	-	-	-	-	1	-	
	BR 32 KS.002-09		-	-	-	-	-	-	-	-	-	1	
8	BR 30 K.003-01	Brake cone	2	2	2	2	2	2	2	2	2	2	
9	BR 30 K.004-01	Pusher cone	2	2	2	2	2	2	2	2	2	2	
10	BR 30 K.005	Bushing	1	1	1	1	1	1	1	1	1	1	
11	BR 22 KS.006-07	Pusher	1	-	-	-	-	-	-	-	-	-	
	BR 22 KS.006-09		-	1	-	-	-	-	-	-	-	-	
	BR 22 KS.006-05		-	-	1	-	-	-	-	-	-	-	
	BR 22 KS.006-04		-	-	-	1	-	-	-	-	-	-	
	BR 22 KS.006-03		-	-	-	-	1	-	-	-	-	-	
	BR 22 KS.006-02		-	-	-	-	-	1	-	-	-	-	
	BR 22 KS.006-01		-	-	-	-	-	-	1	-	-	-	
	BR 22 KS.006-08		-	-	-	-	-	-	-	1	-	-	
	BR 22 KS.006-06		-	-	-	-	-	-	-	-	1	-	
	BR 22 KS.006-10		-	-	-	-	-	-	-	-	-	1	
12	BR 30 K.007	Adjustment nut	1	1	1	1	1	1	1	1	1	1	
13	BR 30 K.008	Locknut	1	1	1	1	1	1	1	1	1	1	
14	BR 32 KS.011	Supporting plate	1	1	1	1	1	1	1	1	1	1	
15	Cat. no. 4403	Disc spring	1	1	1	1	1	1	1	1	1	1	
16	Cat. no. 4407	Disc spring	1	1	1	1	1	1	1	1	1	1	
17	M30x1.5	Nut	1	1	1	1	1	1	1	1	1	1	
18	1.2.C6	Grease nipple	2	2	2	2	2	2	2	2	2	2	

BALTROTORS
Instituta Street - 1, Salaspils. Riga region, LATVIA LV-2169
Phone: +(371) 67 981074, Fax: +(371) 67 981075
E-mail: baltrotors@baltrotors.lv

ROTATOR HOOKS

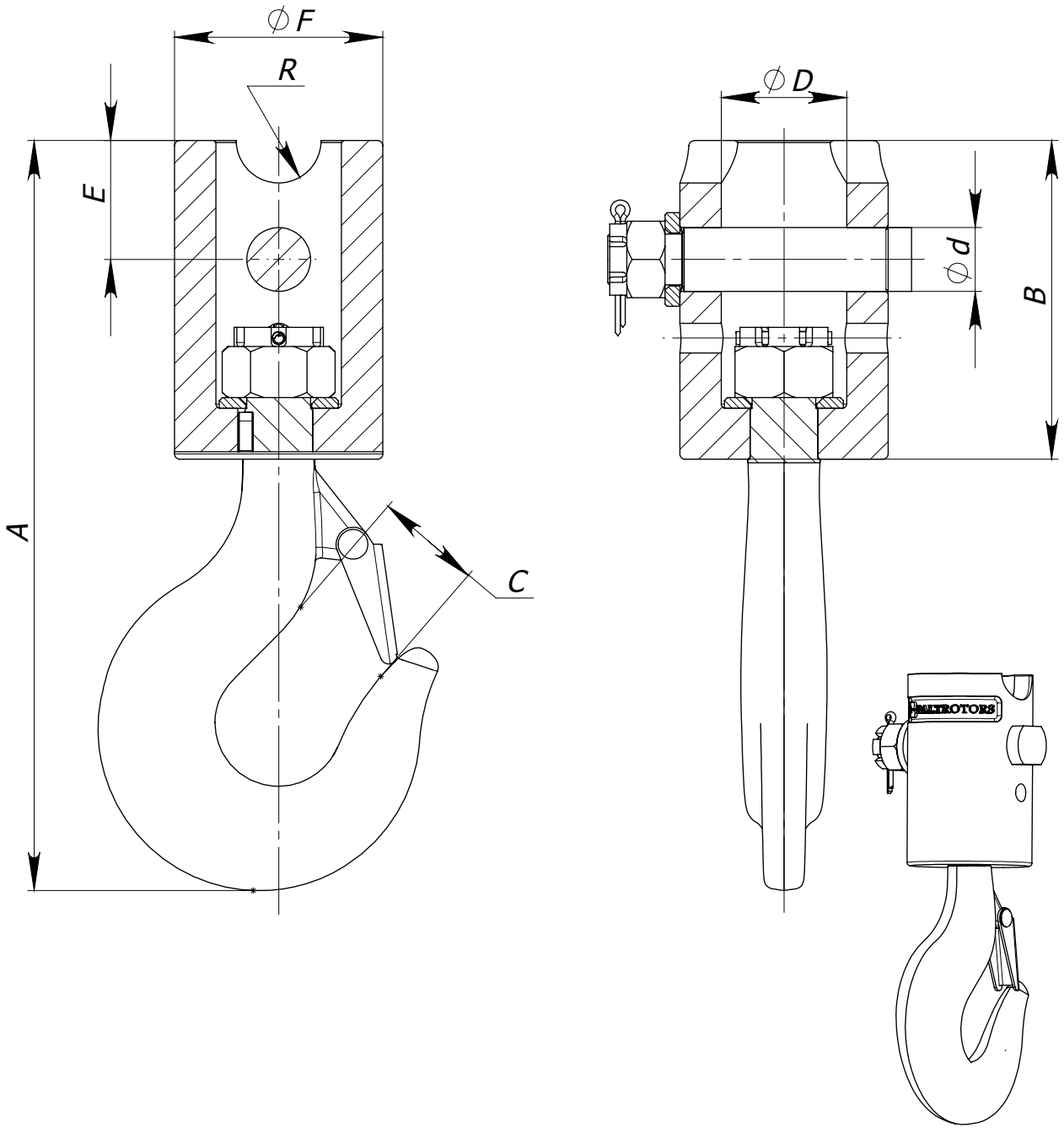

HOOK	Dimensions, mm (in)								Capacity, kg (lb)
	A	B	C	D	d	E	F	R	
HA550	316(12.44)	150(5.91)	42(1.65)	50(1.97)	25(0.98)	56(2.20)	87(3.43)	20(0.79)	5000 (11023)
HA559	316(12.44)	150(5.91)	42(1.65)	59(2.32)	30(1.18)	56(2.20)	98(3.86)	20(0.79)	
HA569	316(12.44)	150(5.91)	42(1.65)	69(2.72)	30(1.18)	56(2.20)	98(3.86)	20(0.79)	
HA859	364(14.33)	161(6.34)	49(1.93)	59(2.32)	30(1.18)	56(2.20)	98(3.86)	20(0.79)	8000 (17637)
HA869	364(14.33)	161(6.34)	49(1.93)	69(2.72)	30(1.18)	56(2.20)	98(3.86)	20(0.79)	
HA878	381(15.00)	178(7.01)	49(1.93)	78(3.07)	30(1.18)	63(2.48)	120(4.72)	30(1.18)	

2007.10.09.

BALTROTORS

Instituta Street - 1, Salaspils. Riga region, LATVIA LV-2169
Phone: +(371) 67 981074, Fax: +(371) 67 981075
E-mail: baltrotors@baltrotors.lv

ROTATOR HOOKS

List of parts

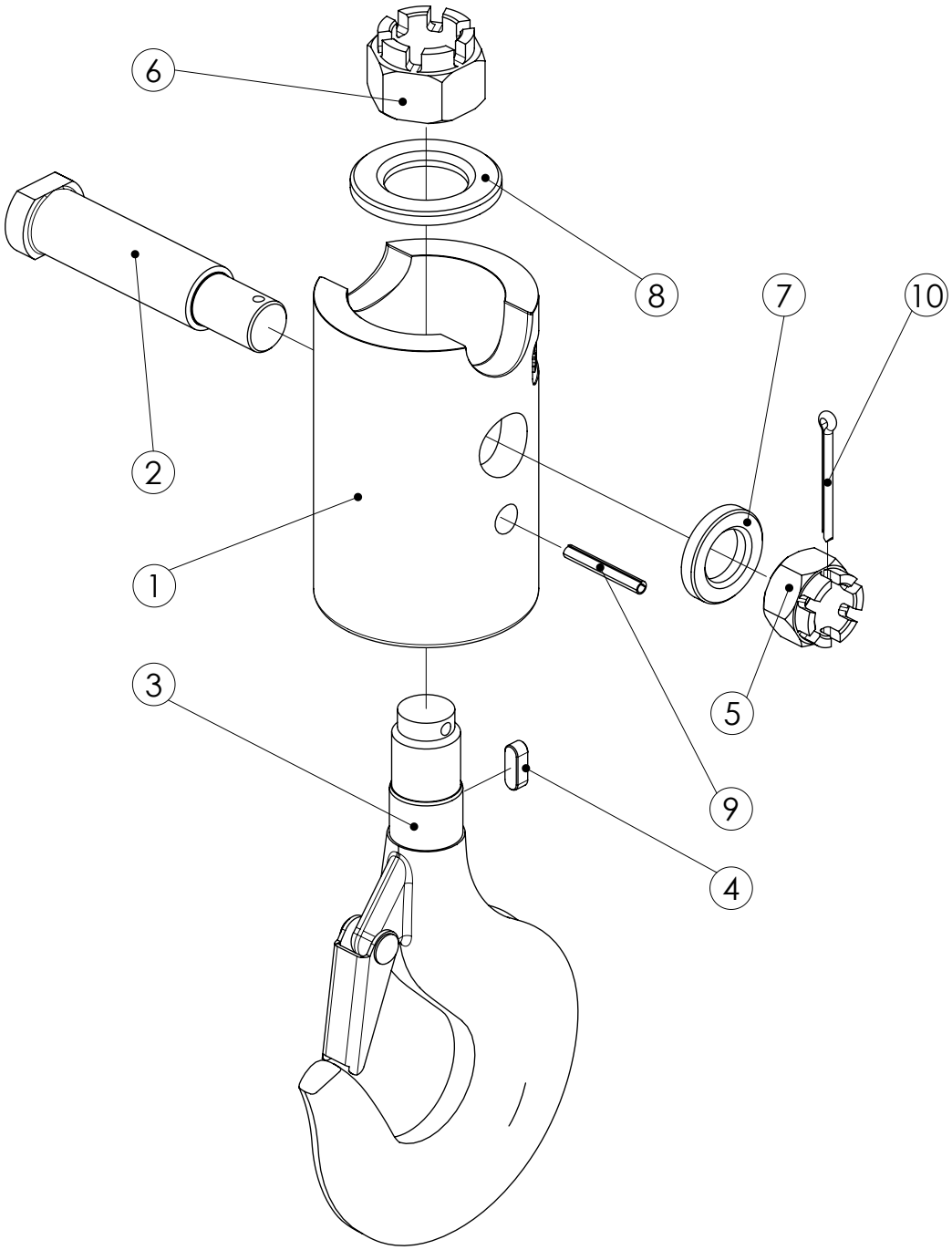

2007.10.09. Sheet 2 of 3

BALTROTORS
Instituta Street - 1, Salaspils. Riga region, LATVIA LV-2169
Phone: +(371) 67 981074, Fax: +(371) 67 981075
E-mail: baltrotors@baltrotors.lv

ROTATOR HOOKS

List of parts

Pos.	Part	Title	HA550	HA559	HA569	HA859	HA869	HA878
1	HA550.01	Sleeve	1	-	-	-	-	-
	HA559.01		-	1	-	-	-	-
	HA569.01		-	-	1	-	-	-
	HA859.01		-	-	-	1	-	-
	HA869.01		-	-	-	-	1	-
	HA878.01		-	-	-	-	-	1
2	HA550.02	Pin	1	-	-	-	-	-
	HA559.02		-	1	1	1	1	-
	HA878.02		-	-	-	-	-	1
3	HA559.03	Hook	1	1	1	-	-	-
	HA859.03		-	-	-	1	-	-
	HA869.03		-	-	-	-	1	1
4	HA559.04	Dowel	1	1	1	-	-	-
	HA859.04		-	-	-	1	1	1
5	DIN 935 M24	Nut	1	1	1	1	1	1
6	HA550.05	Nut	1	-	-	-	-	-
	DIN 935 M30		-	1	1	1	-	-
	DIN 935 M36		-	-	-	-	1	1
7	25x44x7 SBRB 8.8	Washer	1	1	1	1	1	1
8	HA550.06	Washer	1	-	-	-	-	-
	DIN 6916-31		-	1	-	1	-	-
	DIN 6916-37		-	-	1	-	1	1
9	6x45 DIN 1481	Pin	1	1	1	1	-	-
	6x55 DIN 1481		-	-	-	-	1	1
10	DIN 94 5x50	Split pin	1	1	1	1	1	1

BALTROTORS
Instituta Street - 1, Salaspils. Riga region, LATVIA LV-2169
Phone: +(371) 67 981074, Fax: +(371) 67 981075
E-mail: baltrotors@baltrotors.lv