HydrokiT

HYDRAULIC GLOBAL SOLUTIONS

30 YEARS OF EXPERTISE IN HYDRAULICS

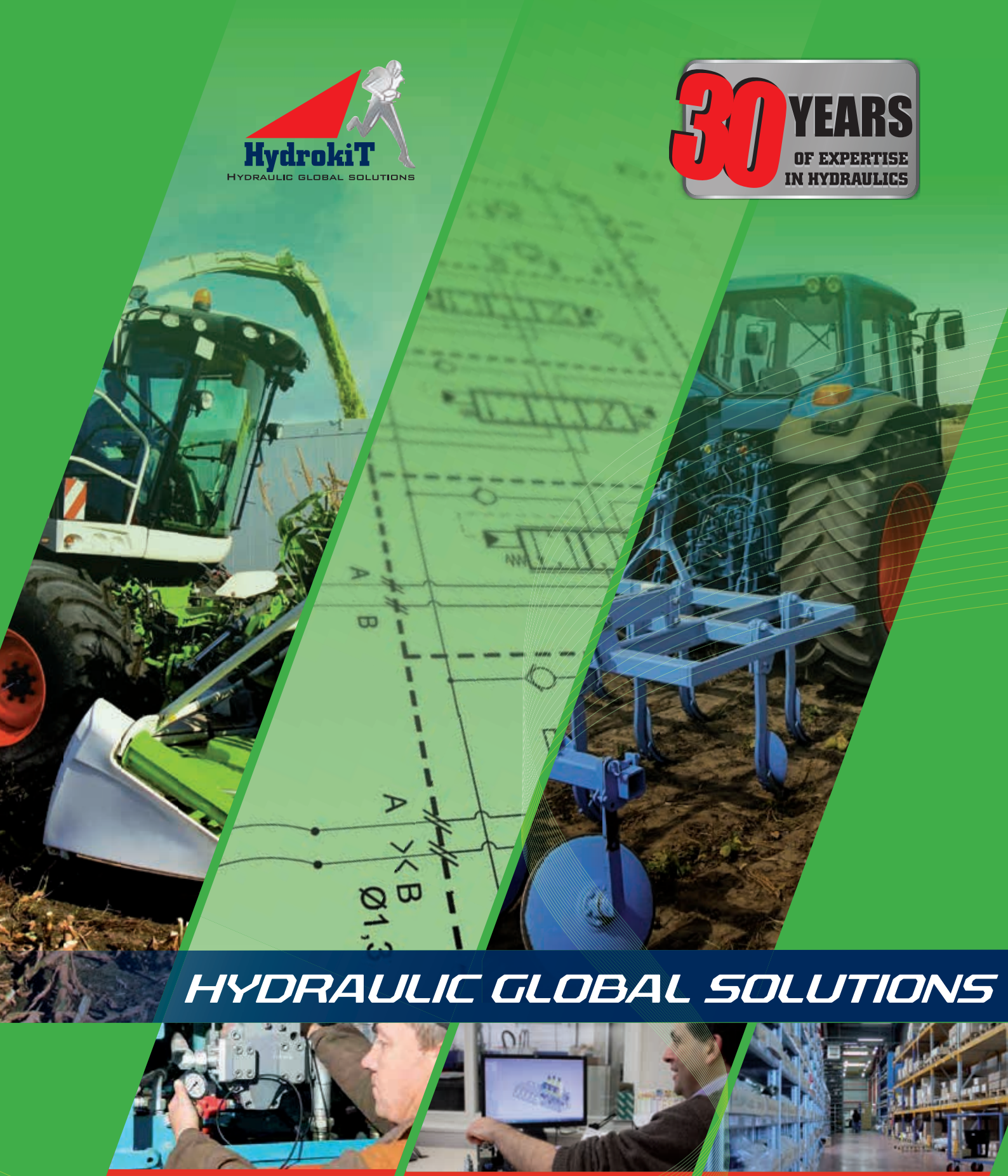

HYDRAULIC GLOBAL SOLUTIONS

A COMPANY OF GROUP VENSYS

HYDROKIT DESIGNS AND MANUFACTURES CUSTOM ELECTRO-HYDRAULIC SOLUTIONS

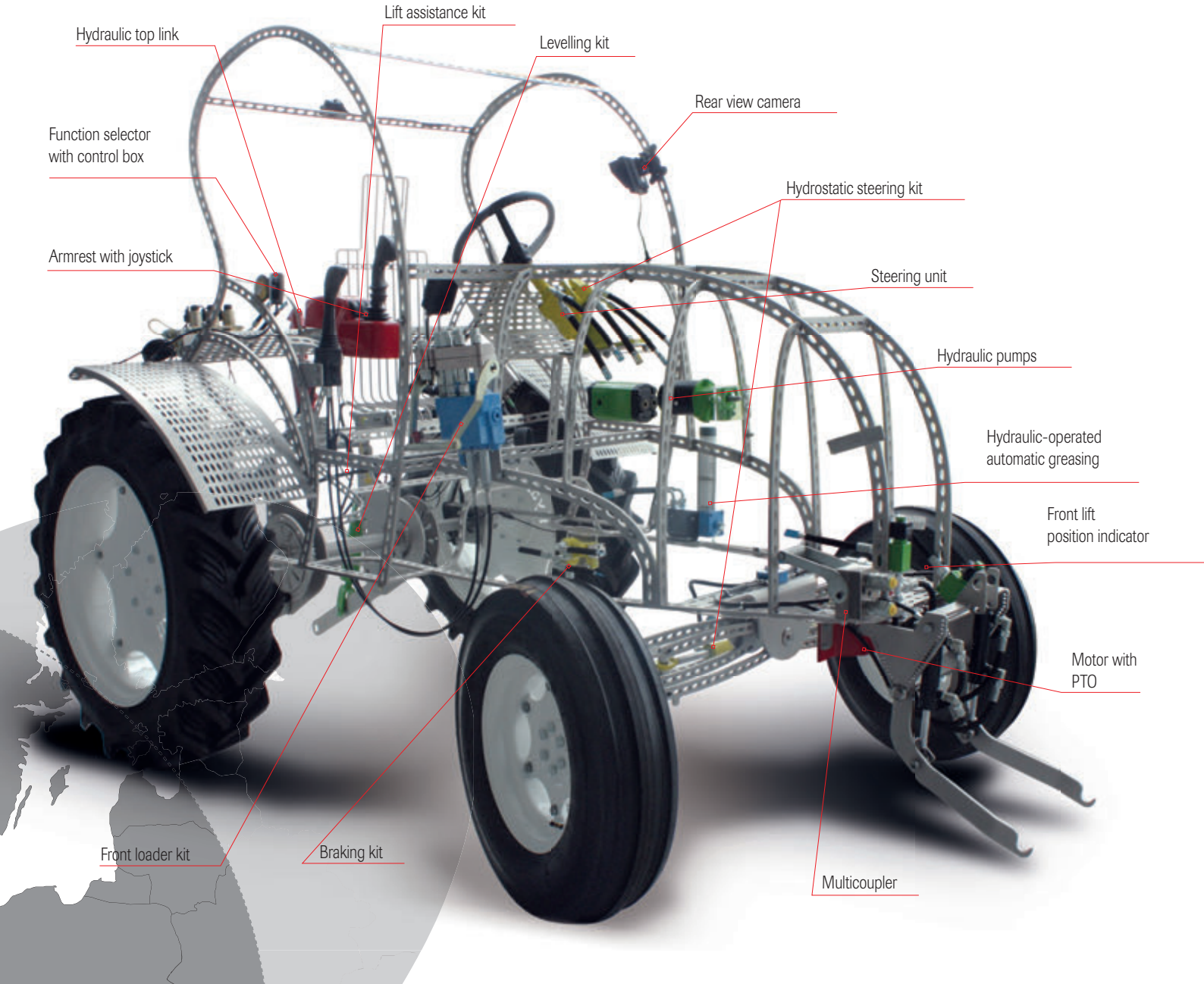

We advise

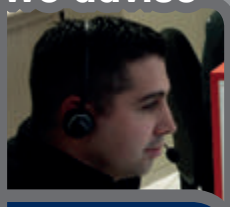

Hydraulic and electric specialists to help you define your needs

We design

Hydraulic engineers to develop your kits and solutions

We stock

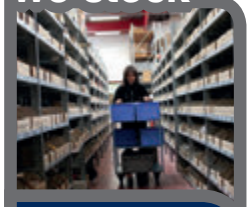

16000 different parts **in stock**

We deliver

200 parcels sent every day,

D+2

International deliveries

We assist

A question?
A problem?
An emergency?

Contact us

RECOMMENDED FLOW RATE FOR GEAR PUMPS

Recommendations are based on oils with a maximum viscosity of 9°E at 38°C, operating at temperatures between 18°C and 68°C.

Suction speed	Delivery speed	General return speed
0.8 to 1 m/s	3 to 4 m/s	**2 to 3 m/s**

VISCOSITY

Oil viscosity - mm²/s	
Minimum	**10**
Recommended range	**12 to 60**
Maximum (cold start)	**1600**

TEMPERATURE

Temperature - °C	
Minimum (cold start)	**-20**
Maximum continuous	**80**
Peak (intermittent)	**90**

DISPLACEMENT CALCULATION

Disp. = 3.14 x D x W x H
(cm³/rev)

D = centre-to-centre distance between the 2 pinions
W = pinion tooth width
H = tooth height
Values in cm

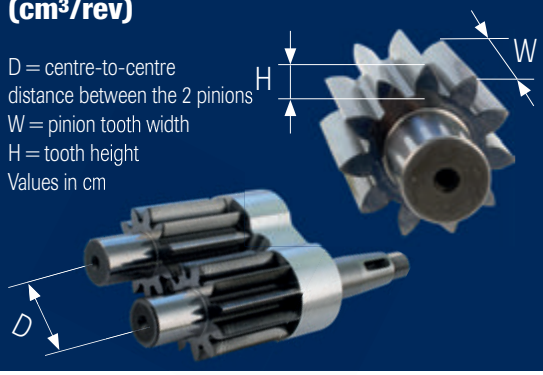

PIPE DIAMETER DEFINITION TABLE

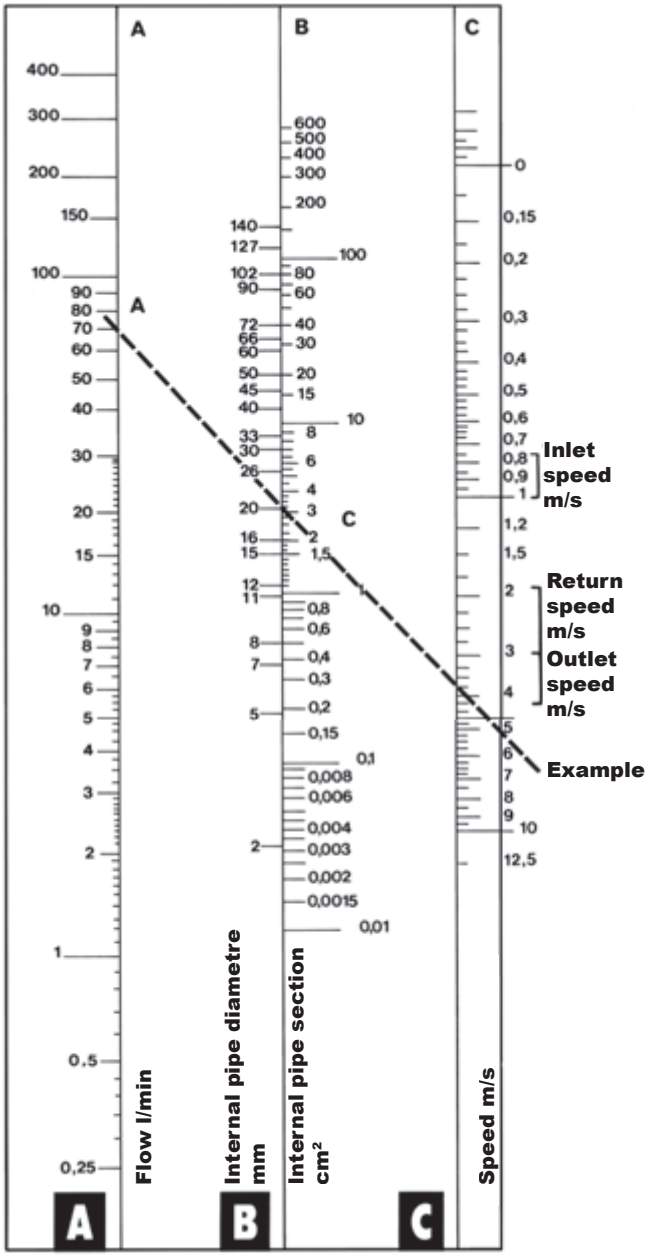

CYLINDER FORCE

F = p X S

F = Force in daN
p = Pressure in bar
S = Cross-section in cm²

POWER OUTPUT OF A MOTOR DRIVEN PUMP

$$p = \frac{F \times P}{540}$$

F = flow rate (l/min)
P = pressure (bar)
p = power (kW)
kW = 1.36 hp - 1 hp = 736 W

ENGINE TORQUE

$$T = \frac{716 \times P}{S}$$

P = power (hp)
S = speed (rpm)
T = torque (MdaN)

HYDRAULIC MOTOR TORQUE

$$T = \frac{DS \times P}{628}$$

DS = displacement (cm³/rev)
P = pressure (bar)
T = torque (MdaN)

Headquarters: +33 (0)2 51 34 10 10 / UK: +44 (0)1728 684 800

Agricultural equipment

Agricultural pumps

Hydraulic components

Reservoirs

Filtration

Coolers and heat exchangers

Hydraulic pumps

Power packs

Flow regulation

Pressure regulation

Distribution

Check valves

Cylinders

Hydraulic motors

Steering components

Connectors

Electric components

Workshop and control equipment

Symbols

Headquarters: +33 (0)2 51 34 10 10 / UK: +44 (0)1728 684 800

TOP LINKS FOR GARDEN TRACTORS AND GREEN SPACES

Composition

- 30 x 50 top link and double-acting PO valve.

Fixings		Closed centres	Stroke	Reference
Tractor side	Tool side			
Ø 19	Ø 19	410	160	**3050160ROT**
Ø 19	Ø 19	460	210	**3050210ROT**
Ø 19	Ø 19	530	280	**3050280ROT**

Function doubler kit See page 130

Option: hose and 3/8 BSP coupler kit
Reference: KFLEX038V2

The solution to working precisely and efficiently!

TOP LINKS FOR ORCHARD AND VINEYARD TRACTORS

- Compact.

Composition

- 35 x 70 top link and double-acting PO valve.

Fixings		Closed centres	Stroke	Reference
Tractor side	Tool side			
Ø 25.4	Ø 25.4	474	160	**3570160CRO**

Option: hose and 1/2 BSP coupler kit
Reference: KFLEX012V2

TOP LINKS FOR 40 TO 70 HP TRACTORS

- Long stroke.

Composition

- 30 x 60 top link, double-acting PO valve and hoses.

Version	Stroke	Tractor capacity (hp)	Closed centres (mm)	Open centers (mm)	Fixings		Reference	
					Tool side	Tractor side	With screw-on couplers	With quick couplers
Without check valve	300	70	560	860	Ø 25.4	Ø 25.4	**403200**	**403210**
With check valve	300	70	560	860	Ø 25.4	Ø 25.4	**403205**	**403215**

TOP LINKS FOR 40 TO 70 HP TRACTORS

Composition

- 35 x 63 top link and double-acting PO valve.

Fixings		Closed centres	Open centers	Stroke	Reference
Tractor side	Tool side				
Ø 25.4	Ø 25.4	550	760	210	**3663210CRO**
Ø 25.4	Ø 25.4	500	710	210	**3563210ROT**

Option: hose and 1/2 BSP coupler kit
Reference: KFLEX012V2

TOP LINKS FOR 70 TO 110 HP TRACTORS

Composition

- 36 x 70 top link and double-acting PO valve.

Fixings		Closed centres	Open centers	Stroke	Reference
Tractor side	Tool side				
Ø 25.4	Ø 25.4	530	740	210	**4080210ROT**
Ø 25.4	Ø 25.4	600	880	280	**4080280ROT**
Ø 32	Ø 32	601	841	240	**4080240CRO**

Option: hose and 1/2 BSP coupler kit
Reference: KFLEX012V2

TOP LINKS FOR 100 TO 150 HP TRACTORS

Composition

- 50 x 90 top link, double-acting PO valve and hoses, unions and quick or screw-on couplers.

Stroke		Fixings		Closed centres (mm)	Open centers (mm)	Reference	
Hydraulic	Manual	Tool side	Tractor side			With screw-on couplers	With quick couplers
210	55	Ø 25.4	Ø 25.4	635	900	**40350001**	**40350101**
210	55	Ø 32	Ø 25.4	635	900	**40350002**	**40350102**
210	55	Ø 32	Ø 32	635	900	**40350003**	**40350103**
210	55	Ø 32	Ø 25.4	705	970	**40350004**	**40350104**
210	55	Ø 32	Ø 32	705	970	**40350005**	**40350105**
210	55	Ø 25.4	Ø 32	665	930	**40350006**	**40350106**
210	55	Ø 32	Ø 32	665	930	**40350007**	**40350107**
210	55	Ø 32	Ø 32	745	1010	**40350008**	**40350108**

Hoses included.

FIXING ACCESSORIES FOR HYDRAULIC TOP LINKS

Automatic hooks

Category	Thread Ø	Outer ball joint Ø	Ref.
2	27 x 300 (right-handed)	51	**AM1448**
3	36 x 300 (right-handed)	60	**C691080**

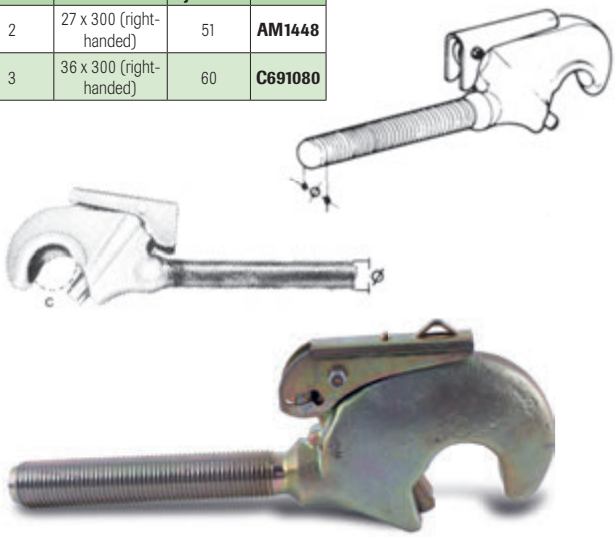

Threaded ball end

Category	A	B	C	D	E	F	G	Reference	Single nut reference
2	25.4	51	36 x 300 (right-handed)	80	200	70	95	**TF361**	**CA36**
3	32	51	36 x 300 (right-handed)	80	2000	70	95	**TF362**	

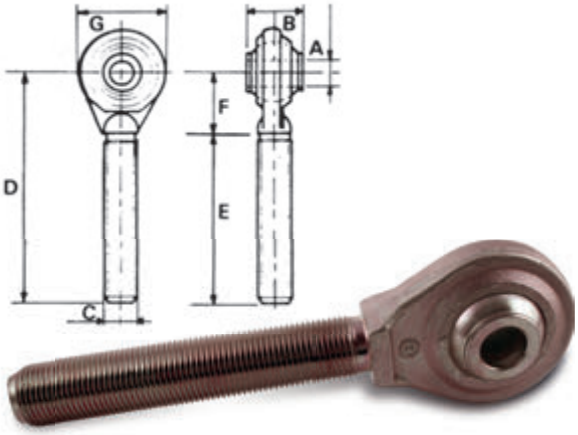

Articulated joints

Category	d	H	R	D	L	A	B	Max. tractor capacity (hp)	Reference
2	26	51	23	M36 x 300	232	63	125	80 - 120	**CAT22363**
3	32	51	32	Right-handed thread	80	63	80	120 - 200	**CAT33363**

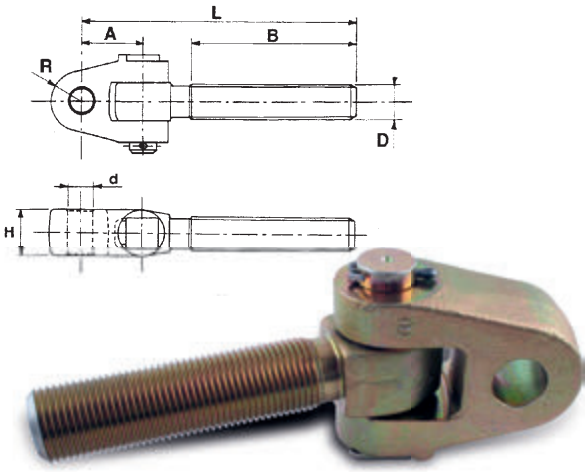

Automatic hook ball joints

Category	Width	External Ø	Internal Ø	Ref.
2	51	51	25	**AM1504**
2	51	60	25	**C652**
3	51	60	32	**C656**

Reducer rings

Applications	Category	A	B	C	Reference
Top link	1 – 2	19.4	25.4	51	**AM38**
	2 – 3	25.4	32	51	**AM40**
Lower arm	1 – 2	22.4	28.4	45	**AM42**
	2 – 3	28.4	38	45	**AM44**

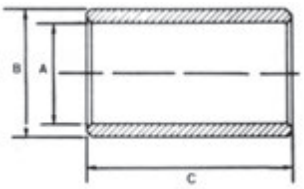

WALTERSCHEID CYLINDERS

- Walterscheid: recognised quality.
- Adapted to high power levels: up to 400 hp.
- Extensive selection of centre-to-centre distances and clevis joints adapted to the tractor.
- Integrated safety valve.
- Support and ball joint included.

Cylinders fitted with hook

150 to 250 hp tractors, Category 3

❶ Cylinder + support						
Reference	Cat / Type	Tractor capacity	Rod Ø	Ø D (mm)	Setting range Lmin -> Lmax	L3 stroke (mm)
3670185CROV1	3/70	150 hp	36	25.4	600->785* or 637->822[2]	185
3670250CROV1					665->915* or 702->952[2]	250
4090185CROV1C	3/90	200 hp	40	32.2	589->774* or 626->810[2]	185
4090185CROV1					625->810* or 662->847[2]	185
4090250CROV1					700->950* or 737->987[2]	250
5090185CROV1		250 hp			629->814[1]	185
5090250CROV1					704->954[1]	250

❷ Clevis joint					
	ø d	L1 (mm)	Reference	x (mm)	y (mm)
*	25.7	63	CAT255090	25.2	39.5
	28.2		CAT285090		
	32.3		CAT325090		
2	25.7	100	CAT255090V1		
	28.2		CAT285090V1		
	32.3		CAT325090V1		
[1]	32.3	67	CAT325090V2	28.2	55.5
	35.2		CAT355090V2		
	37.3		CAT375090V2		

Quality and reliability for large engines.

250 to 400 hp tractors, Category 4

❶ Cylinder + support						
Reference	Cat / Type	Tractor capacity	Rod Ø	Ø D (mm)	Settings range Lmin -> Lmax	L3 stroke (mm)
50120183CROV1	4/120	400 hp	50	45.2	704->887	183
50120248CROV1					769->1017	248

❷ Clevis joint			
ø d	B (mm)	R (mm)	Reference
32.2	50	35	CAT3250120V1
37.3			CAT3750120V1
45.2		41	CAT4550120V1
40.5	60	40	CAT4050120V2
45			CAT4550120V2

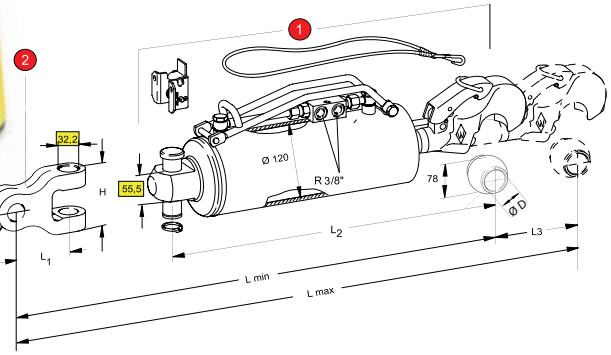

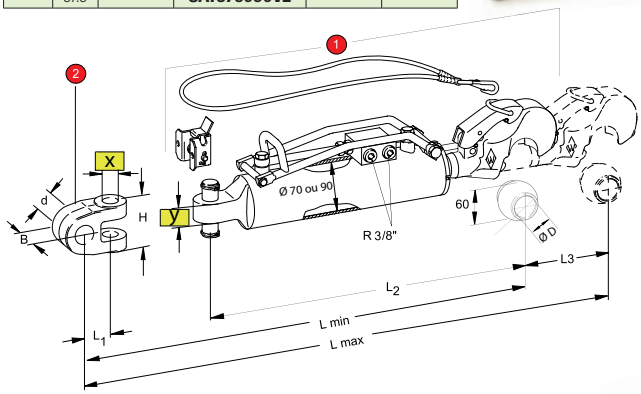

Option
Kit - hose and 1/2 ISO A coupler + 3/8 BSP union
Reference: KFLEX012V2

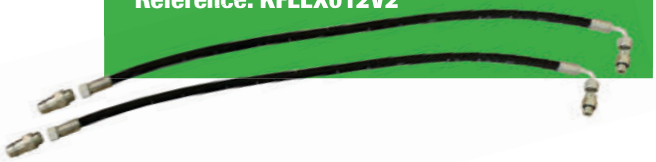

Ball joint cylinders

Up to 300 hp tractors, Category 4

❶ Cylinder + support						
Reference	Cat / Type	Tractor capacity	Rod Ø	Settings range Lmin -> Lmax	L3 stroke (mm)	Ball joint ø B mm	Ball joint ø d mm
50120223ROT32V1	4/120	300 hp	50	669->887	223	51	32.3
50120185ROT32V1				787->972	185	51	32.3
50120185ROT37V1						51	37.3
50120185ROT44V1						63	44.8

❷ Clevis joint			
ø d	B (mm)	R (mm)	Reference
32.2	50	35	CAT3250120V1
37.3			CAT3750120V1
45.2		41	CAT4550120V1
40.5	60	40	CAT4050120V2
45			CAT4550120V2

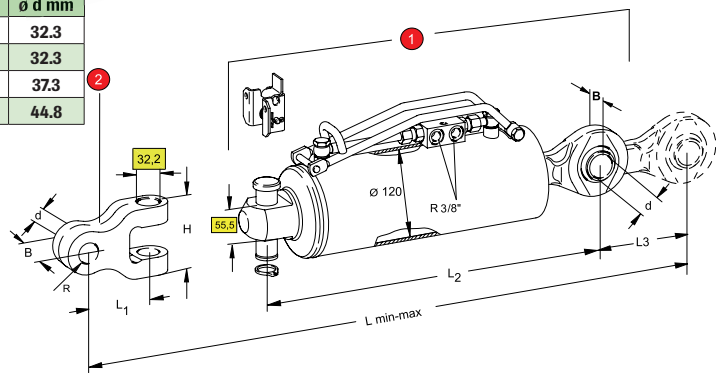

Headquarters: +33 (0)2 51 34 10 10 / UK: +44 (0)1728 684 800

LIFT ASSISTANCE FOR AGRICULTURAL TRACTORS

- **Increase** tractor performance.
- **Protect** the hydraulic lift circuit.
- **Easy** to fit (instruction provided).

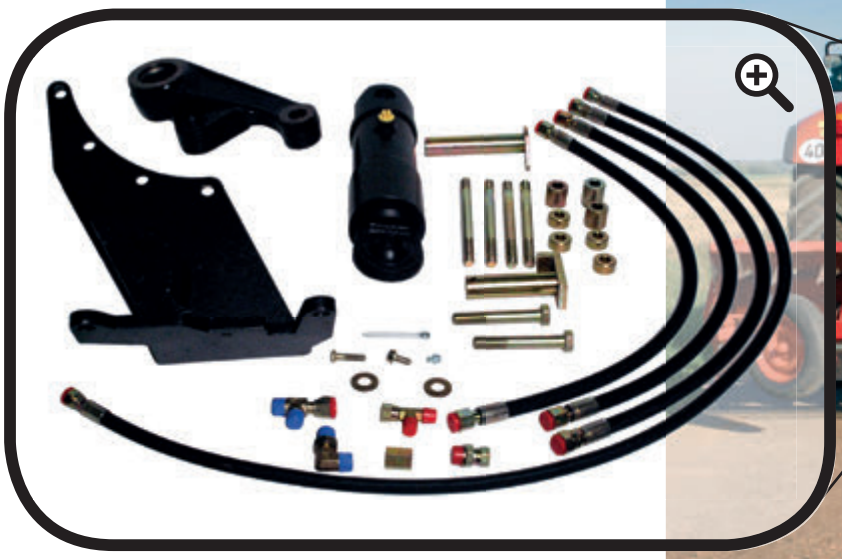

Kits by make: Case IH, David Brown, Deutz

STANDARD HYDROSTATIC STEERING KITS

- This kit **makes steering easier,** stabilises tractor steering and **replace the control box** that creates play.
- **Customisation** available for all tractor types.

Composition

- 1 steering wheel with steering column.
- 1 steering spool valve with load sensing priority valve.
- 1 steering cylinder with anchor lugs.
- 1 set of unions and hoses.
- 1 installation manual.

Extremely responsive steering for a number of tractors.

Cylinder stroke (mm)	Diameter	Ref.
280	25 x 50	**200170**
310	25 x 50	**200171**
250	25 x 50	**200172**
210	25 x 50	**200173**
175	20 x 40	**200174**
350	25 x 50	**207170**

Kits by make: Case IH, David Brown, Deutz, Fendt, Fiat Someca, John Deere, Ford, Massey Ferguson, Renault, Same, Steyr.

BACK UP SAFELY

Rear view camera

- Safety for reversing manoeuvres.
- It is no longer necessary to turn around to see the rear of the vehicle.
- Clean and bright image.
- Visibility in poor light thanks to infra-red system.
- Large colour monitor for better visibility: 5" or 7".
- Save time when manoeuvring: 1 to 2 seconds.
- Specific protection hood for the camera, for working in the most extreme conditions.

For safe manoeuvring (forward or reverse) and to be able to see all areas not covered by the rear-view mirrors.

E13LRECUL3LH model

E13LRECUL34LH

E13LRECUL44LH

Name	Composition	Reference
12/24V 7" rear view kit	7" screen, 2 camera inputs, radio control, 1 colour camera, 20 m monitor to camera connecting cable with waterproof connector and adjustable support	**E13LRECUL3LH**
12/24V 7" rear view kit	7" screen, divisible into 4 sections, 4 camera inputs, radio control, 1 colour camera, 20 m monitor to camera connecting cable with waterproof connector and adjustable support	**E13LRECUL34LH**
12/24V 9" rear view kit	9" screen, divisible into 4 sections, 4 camera inputs, radio control, 1 colour camera, 20 m monitor to camera connecting cable with waterproof connector and adjustable support	**E13LRECUL44LH**
Protective cover, which can be welded on or screwed on		**KC999P01V1**
Additional camera		**E13ACAMSTDLH**
20 m additional cable / extension cable		**E13ACABLE20MLH**
12/24V 5" rear view kit	5" screen, 1 camera input, colour camera with 98° horizontal angle, 20 m monitor to camera connecting cable, accessories for mounting and fastening support.	**E13LRECUL2E**
12/24V 5" rear view kit	5" screen, 3 camera inputs, radio control, colour camera with 98° horizontal angle, 20 m monitor to camera connecting cable, accessories for mounting and fastening support.	**E13LRECUL2**
12/24V 7" rear view kit	7" screen, 3 camera inputs, radio control, colour camera with 98° horizontal angle, 20 m monitor to camera connecting cable, accessories for mounting and fastening support.	**E13LRECUL3**
Protective cover, which can be welded on or screwed on		**KC999P01V1**
Additional 98° standard / 120° diagonal camera + 20 m cable		**E13ACAMSUP98**
Camera angle - 62° horizontal / 78° diagonal + 20 m cable		**E13ACAMSUP62**
Camera angle - 32° horizontal / 40° diagonal + 20 m cable		**E13ACAMSUP32**
20 m connection / extension cable		**E13ACABLE20M**
10 m connection / extension cable		**E13ACABLE10M**
5 m connection / extension cable		**E13ACABLE05M**
Spiral cable kit for truck/tipper (10 m + 20 m + spiral)		**E13ACABLEKSPI**
Top of the range 12/24V 7" rear view kit	Top of the range 7" screen with 1 camera input, anti-glare colour ball camera, 115° horizontal angle, 20 m monitor to camera connecting cable, accessories for mounting and fastening support.	**E13LORECUL3**

E13ACAMSTDLH

E13ACABLE20MLH

BRIGADE

ORLACO

Product sheet on request

E13LRECUL2 model

E13LORECUL3 model

Headquarters: +33 (0)2 51 34 10 10 / UK: +44 (0)1728 684 800

LOAD INDICATORS

- An extremely useful accessory for handling, this kit makes it possible to **precisely measure (maximum error 5%) the weight of the products that are being handled** (the equipment is not authorised for commercial sale) for:
  - Daily feed (silage, roots),
  - Supply (loading fertiliser, etc.),
  - Harvest (weighing hay, straw, grain).

Composition

- 1 pressure gauge with a 160-mm diameter dial and stabilising liquid antifreeze.
- Immutable body and gear set (stainless steel).
- Felt pen for calibration by the operator.
- Integrated safety: the pressure gauge is protected from excessive pressure by a reducer.
- Union and 1.5-m hose.

Directions and safety precautions for working in optimal conditions.

ATTENTION: cannot be used on a circuit fitted with check valves.

Calibration point		Type	Excessive pressure in bar	Reference
A	E			
25	172	2000	280	IDC 20 . . V1
25	130	1600	220	IDC 16 . . V1
30	100	1100	162	IDC 11 . . V1

Specify the tube size in mm

SAFETY VALVE KIT FOR FRONT LOADER

- This kit is a security device that allows the **locking of the system in the event of a hose burst** in the lift or bucket circuits on a front loader.
- The system **maintains all the shock absorber and float functions** installed whether provided on a single or double acting cylinder. **It also maintains the anti-shock functions on the bucket cylinders** without the need for hydraulic or electric control.

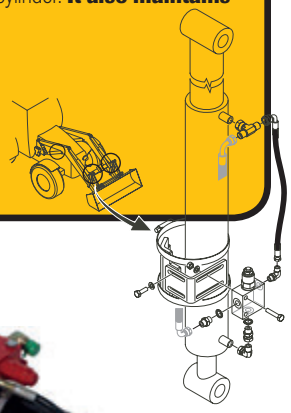

ELECTRONIC LOAD INDICATOR

- Possible to **combine payloads**.
- **Large backlit** display.
- **Audible alert if there is an overload**.
- **Easy to use:** 5 buttons for navigation and settings.
- Coloured silkscreen printing on polyester, offering **excellent resistance** and a long service life.
- **Interface in 3 languages:** FR / EN / DE.

Indicates the load in real time and the total number of transported loads.

Composition

- 1 iControl display.
- 1 pressure sensor, 0-250 bar (other ranges on request). Max. pressure: 750 bar.
- 1 wiring harness (power + sensor).
- Arm and suction pad attachment.

Specifications

- Power: 10 to 30 V DC.
- Dimensions: 155 mm x 95 mm - characters: 9.66 x 4.84 mm.
- M12 connector - 5 points at the rear.
- Stainless steel sensor.
- Suitable for agricultural loaders, front lifts, fork lift trucks, etc.
- Not suitable for telehandlers.
- The equipment is not authorised for commercial sale.

Operating principle

- The load indicator kit - iControl is based on the hydraulic pressure measurement in the circuit.
- The load is measured dynamically (permanent display).
- The measured load can then be added to the total by the operator at the touch of a button.
- However, the operator can cancel the last load so that it is not included in the total.
- If there is an overload the operator is alerted by the buzzer and by a warning message.

Reference: IDCE01V1

KITS 3, 4 AND 5 ADDITIONAL FUNCTIONS FOR CONTROL FRONT LOADER ON ARMREST

- **Save time** with the integrated control on the cross-control joystick.
- **Customisation** by make: Deutz, Same, Fendt, Case, New Holland, Valtra, etc.
- Specific **adaptation for each make** and type of tractor.
- **Approved** by Fendt, Alo, Deutz, etc.
- **Easy to install**: triple the hydraulic functions of your tractors.

Tractor make	Type	Reference
Case	CVX / MXU multi-controller	**KE021D02V1**
Fendt	Vario 400/700/800/900	**KE008D01V1**
New Holland	TVT	**KE067D01V1**
Same	IRON Hi-line	**KE042D01V1**
Deutz	Agrotron K series profiline	**KE007D01V1**
Valtra	C and M series	**N/A**

Efficient equipment for front loaders.

POSITION INDICATOR KITS ON FRONT LIFT

Applications

- Position indicator on front lift.
- Low position and high position management.

- **Practical:** front lift position display.
- **Convenience:** high and low positions are remembered by a hydraulic stop.
- **Easy to install:** adjustment between the spool valve and the original cylinder.
- **Safety:** the cylinder is locked in road mode.

Name	Reference
Position indicator kit	**BIPR01V1**
Position indicator kit with hydraulic locking	**BIPRA1V1**

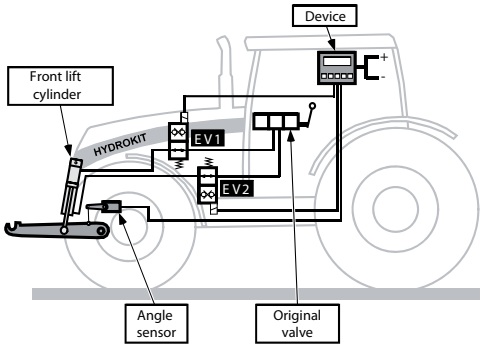

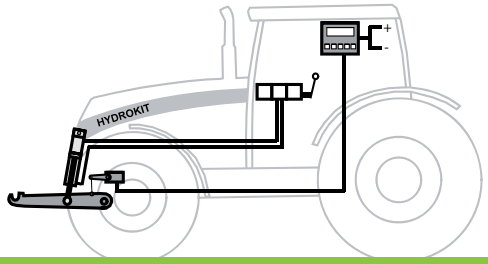

SPOOL VALVE KITS FOR FRONT LIFT

Composition

- A spool valve with an LS signal (max. 65 l/min, min. 180 bar).
- A shuttle valve for the LS signal.
- One control box in the cabin, with or without float position.
- One control box at the front of the tractor.

Number of functions	Float position on the lift
1	**No**
1	**Yes**
2	**Yes**

Contact us

LOADER SHOCK ABSORBERS

- The loader shock absorber kit **reduces impacts** associated with transport overload.
- Tractors and implements are **more stable**.
- **Ideal** comfort at high speeds.

Reference:
SCFV2

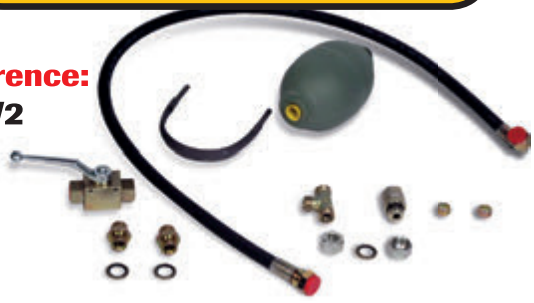

Headquarters: +33 (0)2 51 34 10 10 / **UK:** +44 (0)1728 684 800

SPOOL VALVES FOR FRONT LOADER

- This spool valve kit, specifically for front loaders, can be **adapted to all tractor hydraulic circuit types**: Load sensing, open centre, carry-over centre and closed centre circuits.

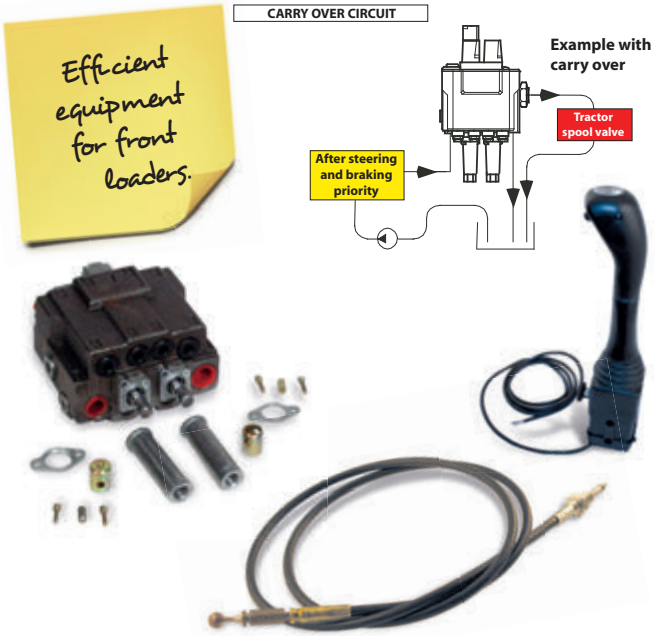

Composition

- 1 spool valve, 2 elements (flow rate 70 l/min) with float position (openings P, A1, B1, A2, B2 = 1/2BSP and T = 3/4BSP).
- 1 remote control box, 2 m control cable (contact us for other lengths).

Name	Reference
Spool valve kit, 2 DA carry-over centre / open centre / closed centre	DM70V2
Spool valve kit, 1 DA + 1 SA carry-over centre / open centre / closed centre	DM70DSEV1
Spool valve kit, 2 DA Load Sensing (LS)	DM70LSV2
Multi-coupler option	MCX05S04FABQ
3rd function option The control box is designed to power a third function.	SFMDM70V2
1.5 m single control cable	TC1500DM7M
2 m single control cable	TC2000DM7M
Handle with switch	BCD2DM7M1

LOW-PRESSURE CONTROL SPOOL VALVES FOR FRONT LOADER

- **Smooth function:** movement controlled via low pressure (construction equipment principle).
- **Adapts to all circuit types:**
  > Open centre, > Carry-over centre,
  > Closed centre, > Load Sensing (LS).
- **Save time** in movements: high flow rate of 110 l/min and a maximum of 250 bar.
- **No additional connection:** integrated pressure reduction and float position.
- **Easy installation:** joystick support provided, hoses and unions are ready to install.
- **Practical:** handle with 4 additional electrical controls and connection wiring harness (float position, 3rd and 4th function and a free function).

Name	Type of circuit		Control hose (m)	Reference
	Open circuit, closed circuit and carry-over line	Load Sensing (LS) circuit		
Loader spool valve kit, open circuit, closed circuit and carry-over centre, 2 m hose	X	-	2	KB999G01V1
Loader spool valve kit, open circuit, closed circuit and carry-over centre, 2.4 m hose	X	-	2.4	KB999G02V1
Loader spool valve kit, open circuit, closed circuit and carry-over centre, 2.8 m hose	X	-	2.8	KB999G03V1
Loader spool valve kit, open circuit, closed circuit and carry-over centre, 3.2 m hose	X	-	3.2	KB999G04V1
Loader spool valve kit Load sensing circuit, 2.0 m hose	-	X	2	KB999G05V1
Loader spool valve kit Load sensing circuit, 2.4 m hose	-	X	2.4	KB999G06V1
Loader spool valve kit Load sensing circuit, 2.8 m hose	-	X	2.8	KB999G07V1
Loader spool valve kit Load sensing circuit, 3.2 m hose	-	X	3.2	KB999G08V1
Multi-coupler, male/female (connected directly to the spool valve)	-	-	-	DCRMFDM70
Third function kit	-	-	-	SFMDM70V2
Shuttle valve for LS circuit	-	-	-	SCN014HT

* Length of low-pressure hose from the joystick to the spool valve

Options

- 3rd function with electric control.
- Multi-couplers: the multi-coupler is fastened directly onto the spool valve.

Each kit includes:

- The hydraulic joystick with a 4 push-button handle.
- A joystick support.
- A wiring harness with module and connection for float position, 3rd and 4th functions (wired to the spool valve).
  A male / female socket provided for 3rd and 4th function.
- A set of unions for the joystick (outlet is downward and to the rear).
- A set of control hoses and protective sheath.
- A low pressure spool valve.
- A set of unions for the spool valve.
- A set of fastenings.

STANDARD HYDRAULIC LEVELLING BOXES

The double-acting cylinder is delivered without fixings, as the stand's existing fixings will be retained and welded to the cylinder.
The kit includes 2 supply hoses with unions and 2 screw-on or quick couplers for connecting to the tractor couplers.
The dual PO check valve is available as an option.

- **Save time:** Levelling control is now executed from the tractor.
- Enables **precise and steady work** on all terrain types.

30 x 60 cylinder, 200 mm stroke

Version	Tractor max. capacity (hp)	Closed centres (mm)	Force at 180 bar (kg)		Reference	
			Pushing	Pulling	Screw-on couplers	Quick coupler
Without check valve	90	410	5090	3025	**402100**	**402110**
With check valve	90	410	5090	3825	**402101**	**402111**

30 x 60 cylinder, 145 mm stroke (tractors for orchards, vineyards and for work in confined spaces)

Version	Tractor max. capacity (hp)	Closed centres (mm)	Force at 180 bar (kg)		Reference	
			Pushing	Pulling	Screw-on couplers	Quick coupler
Without check valve	80	336	5090	3025	**402105**	**402115**
With check valve	80	336	5090	3825	**402106**	**402116**

Function doubler kit See page 130

For precise work on sloping terrain.

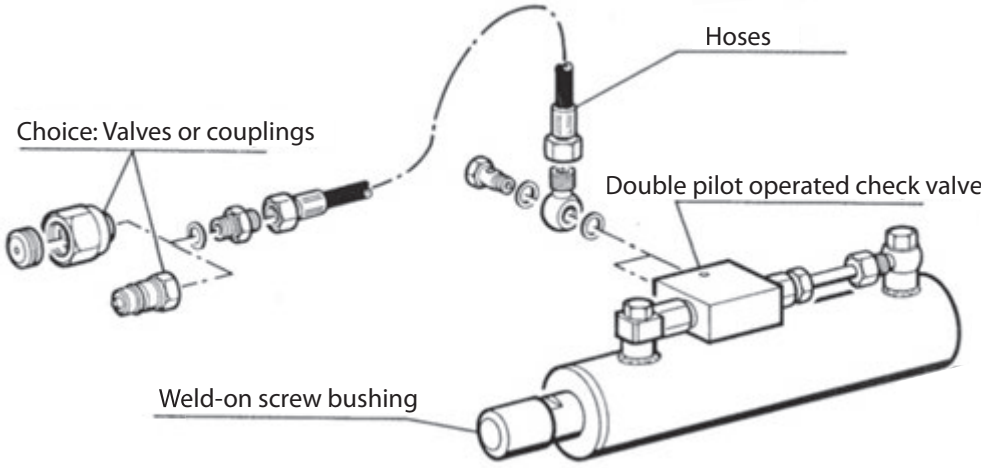

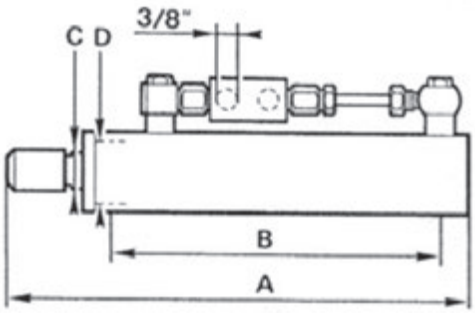

Headquarters: +33 (0)2 51 34 10 10 / UK: +44 (0)1728 684 800

ELECTROHYDRAULIC CLUTCH KITS

- With a simple flip of a **switch**, the operator controls a solenoid valve and a cylinder that **engages the clutch release pedal**.
- The switch can be **fitted on the gear levers or on the floor**.
- **Smooth and fast**, this system protects the driver and the mechanical system during long working days.
- **Easy to install**, it can be fitted on all engines equipped with a mechanical clutch.

Technical specifications

- For use in an existing hydraulic circuit:
  - > Max. flow rate: 130 l/min,
  - > Pressure: 250 bar,
  - > Specific valve priority,
  - > Single-acting cylinder with spring return.

Kit composition

- Hydraulic valve.
- Switches (foot switch option).
- Hydraulic cylinder.
- Set of hoses, unions and fasteners.
- Installation manual.

Free quotation Contact us

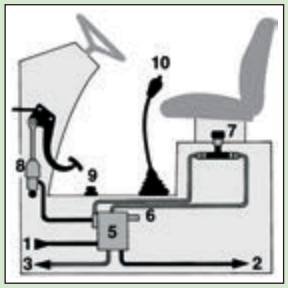

1. From the hydraulic pump to the tractor.
2. Then to the hydraulic system of the lift.
3. To the reservoir.
5. Spool valve block with integrated safety features.
6. Adjustment screw for slow starting.
7. Adjustment device for a smooth start in the cab.
8. Hydraulic cylinder for clutch activation.
9. Foot switch (optional).
10. Manual switch.

HYDRO 4 AXLES

Adaptable on self-propelled harvesters with hydrostatic transmissions

- **Efficiency:** better mobility on extremely wet terrain.
- **Robust:** POCLAIN slow-speed, high-torque motor with reinforced callipers.
- **Reduced installation time:** motors, wheels and callipers are already assembled.
- Delivered with hoses and connectors.
- **Customised:** a kit is provided for each make.

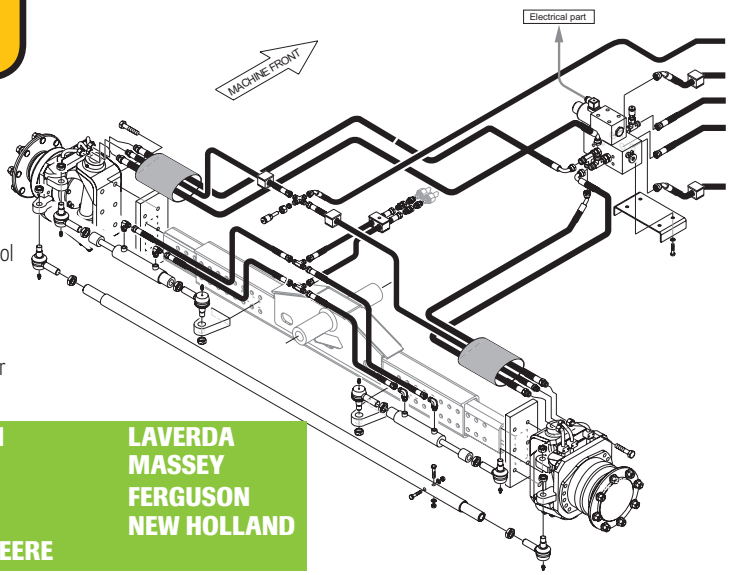

Composition

- 2 low speed motors.
- 2 robust swivel housings.
- 2 steering cylinders with track rod and ball joints.
- 1 hydraulically piloted releasing valve with in-cab electric control (flexible hose lengths should be specified when the order is placed.)
- Customised equipment: shunt blocks, unions and hydraulic hoses (the length of the hoses will be specified when the order is placed).
- 1 installation manual.

Note: the wheels are not provided.

CASE IH	LAVERDA
CLAAS	MASSEY
DEUTZ	FERGUSON
FENDT	NEW HOLLAND
JOHN DEERE	

Kits for snow ploughs

Applications

- Snow plough.
- Sweeper.
- Hedgecutter.
- Implements requiring float position.

STANDARD SNOW PLOUGH KITS

- **Controlled from the cab** all equipment that requires 2 or 3 DA/SA functions, one of which requires float.
- Max. flow rate. 40 l/min.

Composition

- Base and solenoid valves.
- Specific solenoid for float position.
- Cable box

Number of functions	Voltage	Type of switch	
		Small switches	Joystick
2 of which 1 has float	12 VDC	DH240LNV1	DH240LNV2
	24 VDC	-	DH240LNV2B
3 of which 1 has float	12 VDC	DH340LNV1	DH340LNV2
	24 VDC	-	DH340LNV2B

STANDARD SNOW PLOUGH KITS WITH POWER UNIT

- Float position.
- Control from the cab.
- Easy to install.

Composition

- Power unit with spool valve.
- Control box.
- Motor protective housing.

Continuous voltage (V)	12 VDC	24 VDC
Type of distribution	Reference	Reference
1 SA with float	GH11LN121SEFC	GH11LN241SEFC
1 DA with float	GH11LN12D	GH11LN24D
2 DA, of which 1 has float	GH11LN12AD	GH11LN24AD
3 DA, of which 1 has float.	GH11LN12A2D	GH11LN24A2D

STANDARD SNOW PLOUGH KITS AND BOX 2 FUNCTIONS TO MAINTAIN THE PRESSURE OF THE PLOUGH ON THE GROUND

- **Two functions,** one of which has float.
- It is possible to **maintain the pressure of the plough on the ground**.
- Pressure is regulated via a **potentiometer in the cab.**

High-performance devices to improve your equipment.

No of functions	Voltage (VDC)	Pressure (bar)	Reference
2 of which 1 has float	12	0 to 50	KR791L01V3
		0 to 100	KR791L01V1
2 of which 1 has float	24	0 to 50	KR791L01V4
		0 to 100	KR791L01V2

PROPORTIONAL ELECTRICAL DISTRIBUTION WITH FLOAT POSITION

- **Smooth function:** proportional electric control.
- Installation possible **on all types of circuits** (open centre, closed centre, load sensing).
- **Easy installation:** the control box is wired and ready to install.

Contents

- 1 proportional hydraulic block.
- 1 hydraulic block specifically for the float position.
- 1 electronics box.

Number of functions	Voltage (VDC)	Type of circuit	Reference	
			Hydraulic	Box
2 of which 1 has float	12*	Open circuit	KLN2P1FCO01	BDP2D1FLOT
		Closed circuit and LS	KLN2P1FCF1	
3 of which 1 has float	12*	Open circuit	KLN3P1FCO01	BDP2D1FLOT
		Closed circuit and LS	KLN3P1FCF01	

* 24 VDC on request

Headquarters: +33 (0)2 51 34 10 10 / UK: +44 (0)1728 684 800

HYDRAULIC DRIVES FOR FERTILISER OR GRAIN AUGERS

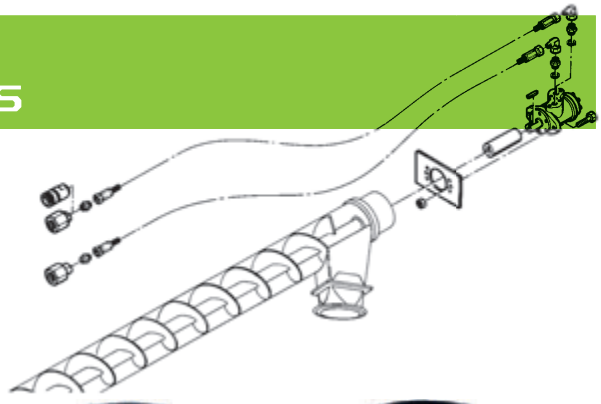

Drive adaptable on any screw with a diameter of less than 300 mm and a maximum length of 4 m. Rotational speed: 250 rpm for an inlet flow rate of 30 l/min.

Composition

- 1 medium-speed motor.
- 1 coupling sleeve Ø 25 or Ø 28 cylindrical key (to be specified when the order is placed).
- 2 hoses, length 8 m.
- Choice of 2 screw-on or quick release couplers.

Kits	Reference
With screw-on couplers	**5043381**
With quick release couplers	**5043382**

6 TO 14 KW HYDRAULIC PTO KITS

Indispensable equipment for replacing mechanical turbine drive on drill combination units

- **Practical:** simply connect the kit.
- Delivered with a fitting.
- **Clever:** delivered with an anti-cavitation unit for a service life that exceeds that of the motor.

Composition

- 1 hydraulic motor that runs according to the available hydraulic flow.
- 1 sleeve, 1"3/8 male 6 spline.
- 1 motor support.
- 1 anti-cavitation block.
- 2 hoses, length 6 metres.
- Connector.

Maximum power (kW)	Flow rate necessary for 540 rpm (l/min)	Max. intake pressure (bar)	Ø shaft	Reference
6	30	175	25	**PF050**
11	50	175	25	**PF080**
14	60	175	25	**PF100**

SEED DRILL MARKER INVERSION VALVE

For increased efficiency

- **Simplified control** of markers.
- Control of 2 markers with **a single spool valve**.
- **Easy to install**.
- Available **for single-acting and double-acting cylinders**.
- **Save time** with each headland manoeuvre: 2 to 10 min/ha.

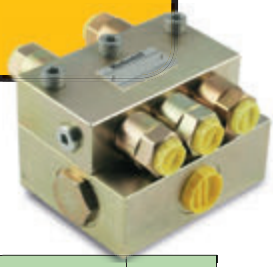

Application

- Seed drill.

Type of cylinder	Max. flow rate (l/min)	Max. pressure (bar)	Mounting Ø	Reference
Single-acting	10	200	3/8" BSP female	**504900**
Single-acting	10	200	12L male	**50490012L**
Double-acting	10	200	1/4" - DIN 10L	**504930**

SEED DRILL HYDRAULIC DRIVE

- **Better grip and improved lift power:** turbine kit allows the lifting of the combination unit on the headland without straining the PTO.
- **Better tractor / tool performance ratio:** the ground tool works at 1000 rpm while the turbine can operate at 540, 1000 or 4000 rpm.

Indispensable equipment for replacing mechanical turbine drive on drill combination units.

Autonomy

- With the powerpack version, the system becomes completely independent.

Practical

- Adaptable to the turbine kit at the front of the tractor.

5043213133

504310

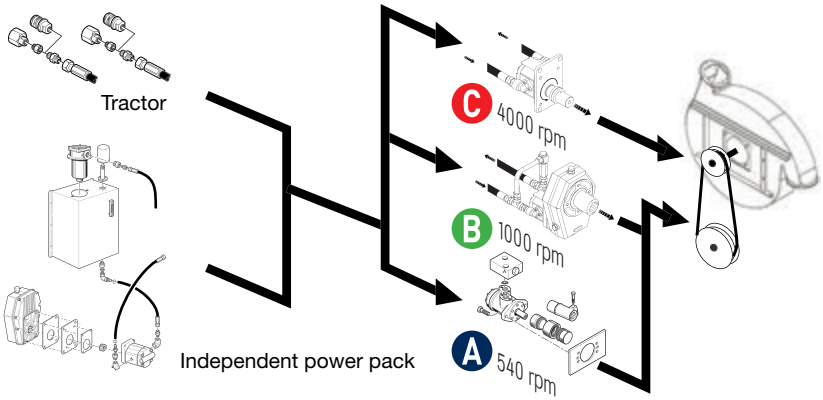

504800V3

ATTENTION: CLEARLY SPECIFY THE ROTATIONAL DIRECTION OF THE TURBINE

Hydraulic power source	PTO speed (rpm)	Drive rotation speed of the engine turbine		Turbine coupling	Kit information	Reference
		rpm	Item			
Tractor spool valve * (1)	-	540	A	1" 3/8 sleeve 6 splines	Motor with 4 m support hoses, anti-cavitation unit, coupler	**5043213138H**
	-	540	A	1" 3/8 sleeve + polyamide		**5043213**
	-	1000	B	1" 3/8 sleeve 6 splines	Flow regulator	**504410V1**
	-	1000	B			
	-	4000	C	Flexible couplings Ø 19	Hose + motor	**504400V1**
		4000	C	Flexible couplings Ø 22		**504401V1**
		4000	C	Flexible couplings Ø 25		**504402V1**
Hydraulic power unit	540	4000	C	Coupling	80-litre reservoir	**504316**
	540	-	-	-	Kit without motor, 50-litre flow rate	**504801V1**
	540	540	A	1" 3/8 sleeve 6 splines	80-litre reservoir	**504310**
	1000	540	A	1" 3/8 sleeve 6 splines	80-litre reservoir	**504311**
	1000	4000	C	Coupling	40-litre reservoir + cooler	**504800V3**
	1000	-	-	-	Kit without motor, 50-litre flow rate	**504802V1**

* Uses the LS circuit or open circuit with a priority valve (flow rate between 30 and 45 l/min).
(1) LS tractor adjustment kit as an option: **RDBA4A41C0**.

HOUR METERS WITH HYDRAULIC ACTIVATION

Meter for hydraulically powered equipment.

- **Autonomous:** powered by a lithium battery (service life 8 years).
- **Inviolable:** waterproof, sealed box (reset to zero is locked).
- **Fast and easy installation:** pressure switch is pre-calibrated to 3 bar and protected by a heat shrink sleeve.
- **Precise:** hour meter + tenths of the hour.

Counter with dual display (daily* + total)

- * Reset to zero via a magnet.
- Hour meter, tenths of an hour, detection via pressure switch: **BCPTH03V1**

Single display meter

- Hour meter, tenths of an hour, detection via Hall sensor **BCPTH10V1**
- Hour meter, tenths of an hour, detection via pressure switch: **BCPTH07V1**
- Meter kit BCPTH07V1 with 3/8" BSP hydraulic union: **BCPTH07038UV1**
- Hour meter, tenths of an hour, detection via terminal W, inductive alternator or sensor: **BCPTH08V1**

Pulse meter

- Pulse meter: **BCPTI01V1**

Composition

- IP67 Watertight box.
- Pressure switch: mounting 1/4" BSP (3 to 600 bar).
- Cable length, 4 meters.
- Dimensions: 82 x 80 x 65 mm.
- Weight: 710 g.

ROTATION SPEED INDICATOR

Two features are adapted to customer requirements.

The rotational speed indicator box that enables monitoring of motor rotation is a 100% HYDROKIT product, developed by the design department. It replaces the rev counter with alarm.

Updated and with several new features, such as the ability to customise texts and 2 motor speeds, this box now has its place in HYDROKIT's standard products catalogue.

- Option of 1 or 2 engine speed sensors,
- Acoustic and visual alarms if the minimum or maximum values are exceeded,
- Meter calculating total and daily use,
- The user can configure texts,
- Attachment by arm and suction pad on all supports,
- 2-line display,
- Backlit screen.

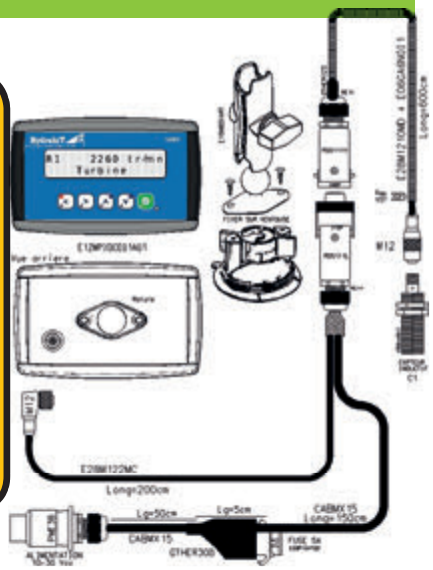

Applications

- Seeder
- Harvester: straw chopper control.

Reference:

IDVR02V1: 2 sensors
IDVR01V1: 1 sensor

INCLINOMETERS

Monitoring of the vertical and horizontal level on hedgecutters.

- **Easy to install:** simply fasten the box on the level tool.
- **Significant range:** ± 12°.
- **Practical:** automatic changeover between horizontal level and vertical level.
- **Robust:** vibration resistant.
- **Saves time:** needle display.
- Box can be fastened in the cab using a suction pad.

Specifications

- Voltage: 10 V to 30 V.
- Power wiring harness: 1.5 m; sensor box: 8 m.

Reference:

BVI01V1

Model for rolling and pitching Contact us

MULTI-COUPLER SOLUTIONS FOR TELEHANDLERS

- Connection under pressure allowed.
- Reduce the risk of contamination and the release of polluting fluids (flat-face couplers).
- Easy to install on the existing system.
- Fixed plate compatible with standard ISO 16028-type couplers.

For quick and easy connection and disconnection of up to 10 electric and/or hydraulic lines of the same or different sizes.

For improving and ensuring safe work with telehandlers.

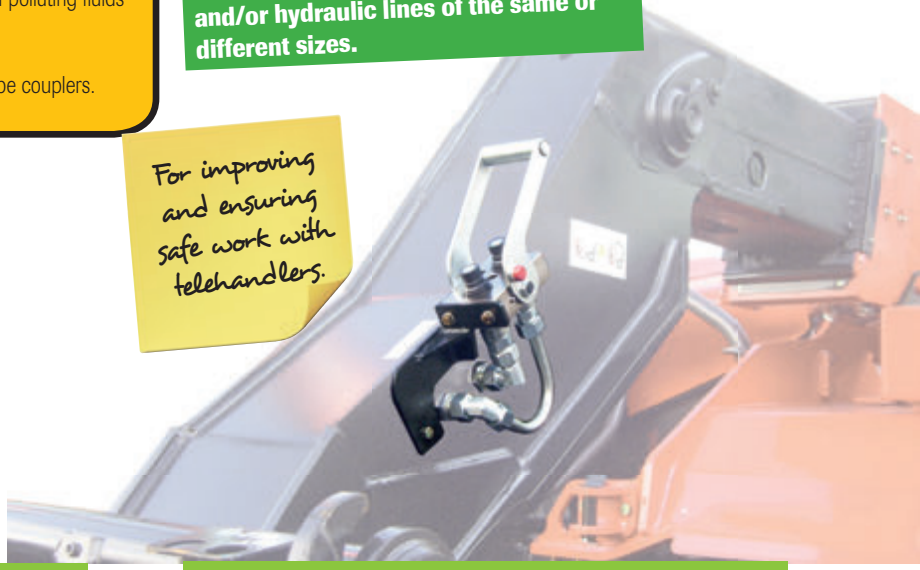

Make	Type	Reference
JCB	Series 58/67/95	**KC128D02V3**
CLAAS	6030-7030 with hydraulic locking	**KC061D15V4**
	6030-7030 without hydraulic locking	**KC061D15V3**
MERLO	32.6, 28.8	**KC139D01V2**
	30.6, 34.7, 40.7	**KC139D02V2**
DIECI	40.7	**KC114D01V1**

Multicou-plers See page 188

Couplers See pages 184-187

Greasing on telehandler on request

RIDE CONTROL KITS FOR TELEHANDLERS

- **Comfort and movement on the road** (air-over-oil suspension on the arm).
- **Safe** driving.
- **Significant reduction of jolting** in the cab.
- **Road travel** takes less time.
- Implementation of the **safety system**.
- Compatible with the safety valve.

Makes: Caterpillar, Bobcat, JLG, Massey Ferguson, Deutz Fahr...

BRAKE KITS FOR TELEHANDLERS

- **Better safety:** the braking kit for telehandlers facilitates movement with trailers.

Make	Model	Reference
JLG	3058PS	**KF866D02V1**
	4008PS	**KF007D04V1**
DEUTZ FAHR	40.8	**KF007D04V1**
	35.7	**KF866D02V1**
	30.7	**KF007D02Z1**

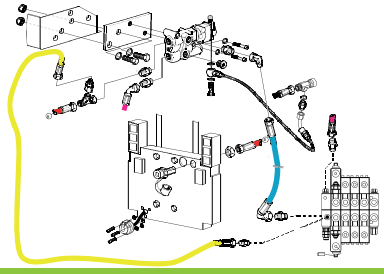

PRESSURE RELEASE KITS FOR TELEHANDLERS

- **Reduced connection effort on the hydraulic couplers:** lines depressurised.
- **Time saving:** no need to stop the engine.
- **Easy pressure release:** in-cab button.

For an easy connection and disconnection of the couplers.

Make	Type	Reference
JCB	All telehandlers	**KL128D01V1**
CLAAS	7030, 7040, 7045	**KL061D15V1**
All makes	2 line kit 12V	**KL999D12V1**
All makes	2 line kit 24V	**KL999D24V1**
All makes	4 line kit 12V	**KL999D12V2**
All makes	4 line kit 24V	**KL999D24V2**

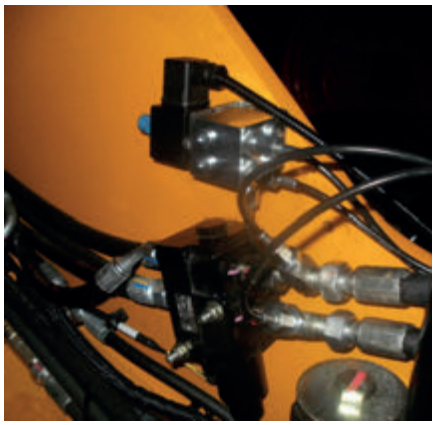

STANDARD FLOW CONTROL SOLUTIONS FOR SPREADERS

Application

- For spreaders (manure, fertiliser, etc.)
- These kits allow real-time adjustment of the motor speed according to the speed of the machine.

- Precise control of the spreading.
- Reliable and proven units

Manual flow divider

- This divider enables a constant flow rate in A, regardless of pressure variations.
  It divides the flow rate at the inlet, into a manually adjustable constant priority flow rate and a residual flow rate.
- The residual flow rate (B) can be pressurised and directed towards a second service.
- Body zinc bichromate.
- 1-turn rotary selector for adjustment from 0 to 10.
- Integrated check valve.
- Working temperature: -20°C to +70°C.

Controlled flow rate on A (l/min)	Max. flow rate at P (l/min)	Max. pressure (bar)	Valve opening pressure (bar)	Mounting		Reference
				A, B	P	
1 to 25	65	5 to 350	0,5	1/2	3/4	**DD6525KGAR**
1 to 50	65	5 to 350	0.5	1/2	3/4	**DD6550KGAR**

Electrical flow divider kit

All flow regulators See pages 101-110

- 12VDC supply.
- Potentiometer graduated from 1 to 10.
- Fuse protected.
- Integrated check valve.
- Operating pressure 315 bar.
- Nominal flow 65 l/min - Temperature -20° to +70°C.
- Regulation precision ± 5%.
- Pressure loss P : 3,5 bar.
- Port P : 3/4" BSP - A and B : 1/2" BSP.
- Flow regulation range 0-50 l/min

Description	Reference
Basic spreader kit	**DD6550K12B**
Basic spreader kit with flow cancellation knob	**DD6550K12C**

Proportional electrical flow divider kit

- 12VDC supply.
- The flow divider divides the incoming flow into a manually adjustable constant priority flow and a residual flow.
  3-way divider with pressure balance.
- The residual flow can be pressurised and directed towards a second service.
- 210 bar pressure.
- Regulated flow from 0 to 50 l/min.
- Port 1/2"BSP.

Description	Reference
Spreader kit max. entry flow 90 l/min	**DDP90501H2**
Spreader kit with flow cancellation knob max. entry flow 90 l/min	**DDP90501H3**
Spreader kit max. entry flow 150 l/min	**DDPA5901H1**
Pressure filter 60 l. 10 µ	**FPL06010AB**

Flow control kit

- Entry flow max. 50l/min.
- 1 conveyor function with proportional flow regulation from 0 to 50 l/min.
- 1 double acting function using the residual flow for the slurry gate.
- 1 switch for the conveyor function, 1 switch for the slurry gate function, potentiometer for the conveyor speed.

Description	Reference
2 functions kit incl. control box + valve block	**DHR2EPAND2**
Optional wired end-of-stroke switch 10 m	**E16FTA002K**
Pressure filter 60l. 10µ	**FPL06010AB**
Optional customised label	**NC**

CUSTOMISED FLOW CONTROL SOLUTIONS FOR SPREADERS

All control boxes See pages 191 and 203

Control boxes

Simplified spreader control box

- 1 indexed (1-way) switch for the conveyor function.
- 1 switch for the slurry gate function
- 1 potentiometer 1 turn for the flow regulation.

Description	Reference
Control box with harness	BEPAND5
Option customised laser serigraph	NC
Optional wired end-of-stroke switch 10 m	E16FTA002K

Icontrol control box

- Spread volume management.
- Icontrol turns your spreader into a precision tool :
  - Flow rate control according to forward speed.
  - Surface and time measurements.
  - Conveyor speed control in percentage or m/min.
  - 3 auxiliary functions management (slurry gate, right spinner, left spinner).
  - Display of the hydraulic pressure of the conveyor or the strain of the chain).
  - Display of the slurry gate height.
  - Display of the spread weight.
  - Calculation of the tonnage by hectare.
  - Monitoring of the rotor speed.
- All these parameters under control and managed by a single unit: iControl.
- Smart control box : Control and display from the same box for more efficiency.
- PWM, PVG compatible.
- Electric actuator control (electric motor, rams).

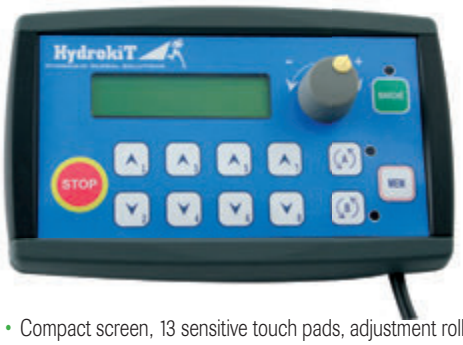

- Compact screen, 13 sensitive touch pads, adjustment roller (setting and menu selection).
- 32-digits backlighted display and LED control lights.
- Set up of several manufacturer and user levels.
- Protected against pole reversal and short circuits.
- Customised front plate.
- CAN BUS data traffic between control box and calculator.

Hydroscreen control box

- Spread volume management.
- Colour screen.
- All information accessible from one single display.
- Hydroscreen turns your spreader into a precision tool :
- - Flow rate control according to forward speed.
  - Surface and time measurements.
  - Conveyor speed control in percentage or m/min.
  - 3 auxiliary functions management (slurry gate, right spinner, left spinner).
  - Display of the hydraulic pressure of the conveyor or the strain of the chain).
  - Display of the slurry gate height.
  - Display of the spread weight.
  - Calculation of the tonnage by hectare.
  - Monitoring of the rotor speed.
- All these parameters under control and managed by a single unit: Hydroscreen.
- Smart control box : Control and display from the same box for more efficiency.
- PVG, PWM signal compatible.
- Electric actuator control (electric motor, rams).

- Compact screen, 11 sensitive touch pads, open roller (setting and menu selection).
- Setting for manufacturer and user.
- CAN BUS data traffic between display and calculator.
- Connection for video.

Spreader solutions brochure on request

CUSTOMISED FLOW CONTROL SOLUTIONS FOR SPREADERS (CONT.)

All valve blocks from page 133

Distribution and regulation valve blocks

DR65 distribution and regulation valve block

- For regulating the speed of an actuator and simultaneously controlling the auxiliary functions from a single pump.
- Suppression of the bypass on the series circuit model.
- PWM flow cartridge.
- Manual regulation or proportional electric control.
- Compact and reduced weight: Stackable, aluminium alloy.
- Easy to use 2 functions simultaneously.
- Modular: From 1 to 7 auxiliary functions.

Max. flow rate (l/min)	Flow rate control (l/min)	Pressure (bar)			Voltage (V)	Ports (BSP)	
		P	A, B	T		P	T, T1, A, B
66	0-50	210	210	160	12 / 24	1/2	**1/2**

DR90 distribution and regulation valve block

- Multifunction manifold block for spreader application
- Powerful: Up to 100 lpm at 220 bar
- Accurate: 0 to 90 lpm controlled through a proportional valve
- Versatile: Suitable for open or closed circuit, load sensing signal available.
- Up to 4 D.A. auxiliary services
- Compact: In line pressure filter integrated
- Safe: Main relief valve, visual indicator for the filter.

+

- Electrically controlled proportional regulation,
- Easy to use, 2 simultaneous functions,
- High-pressure filter integrated in the block,
- Regulated high flow rate 100 l/min at the inlet and 90 l/min at the outlet.
- Modular: From 1 to 5 auxiliary functions.
- Connection to continuous flow or LS.

PVG and stackable CETOP 3 combined hydraulic control blocks

- Modular product.
- Unlimited simultaneous proportional functions, regulated from 0 to 120 l/min.
- Up to 5 auxiliary functions 40 l/min.
- Supplied by open circuit or LS pump.
- All the advantages of a PVG32 valve at the lowest price due to the CETOP assembly for the auxiliary functions.

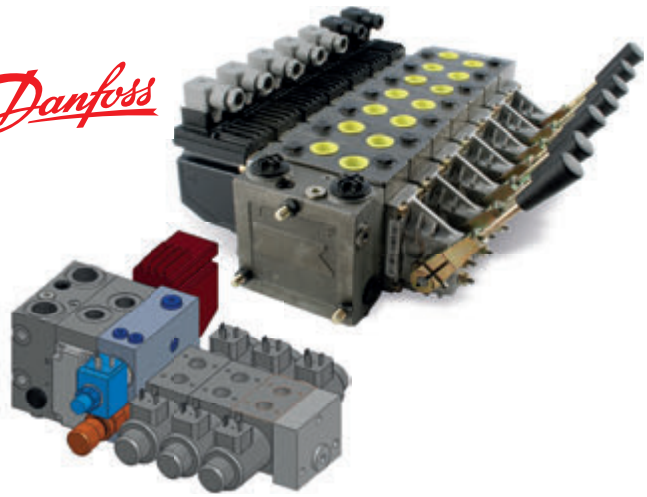

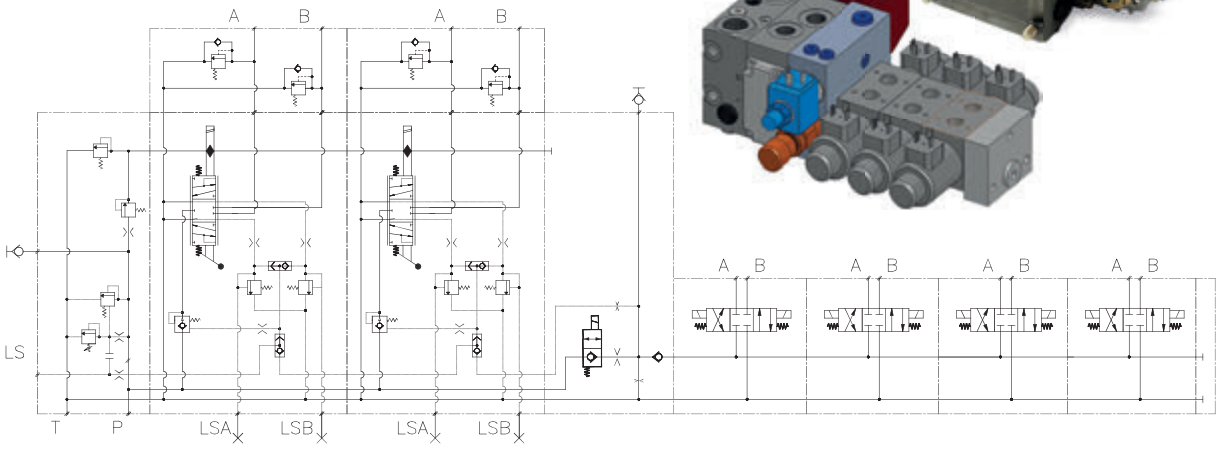

CHAIN LUBRICATION KITS

Specifications

- 12 V pump with 5-litre reservoir, piping, metering units, and brushes.
- Custom fastening supports.
- As an option: mechanically-driven pump with 5-litre reservoir, piping, metering units and brushes.

- **Saves time:** you only have to top up the reservoir.
- **Safety:** the operator does not have to leave the cab while the machine is in operation.
- **Economy:** oiling only happens when the machine is in motion.

AUTOMATIC HYDRAULIC LUBRICATION FROM 2 TO 14 POINTS

Applications

- Self-loaders, maize headers, big balers, crushers, hedgecutters seeder combination drills, silage feeders, manure spreaders, towed fertiliser spreaders,
  mowers, automatic mixers, round bale presses, bale wrappers, self-propelled sprayers, windrow turners, etc.

- **Equipment service life is extended** and greasing is continuous.
- **Saves time:** manual lubrication is no longer necessary; lubrication is automatic.
- **Optimised lubrication:** the hydraulic functions are only lubricated in small quantities.
- **Practical:** easy cartridge replacement.

Name	Reference
Standard hydraulic lubrication kit, 2 to 6 points	KG999Z99L1
Standard hydraulic lubrication kit, 7 to 8 points	KG999Z99L2
Standard hydraulic lubrication kit, 9 to 10 points	KG999Z99L3
Standard hydraulic lubrication kit, 11 to 12 points	KG999Z99L4
Standard hydraulic lubrication kit, 13 to 14 points	KG999Z99L5
Kit with 12 EP2 lubrication cartridges,310 g	EAGLUBES01

CENTRALISED LUBRICATION SYSTEMS

Applications

- The Quicklub centralised lubrication system enables regular quality maintenance on 1 to 100 points, depending on the type of machine.
- Lubricant is directed from the pump to the main spool valve, which assures that it is also distributed to the secondary spool valve.
- The secondary spool valves push the lubricant to the various points using the piping.

- The centralised lubricator **reduces wear** and preserves the value of your machine.
- Continuous lubrication of all the bearings **avoids the costs of unscheduled downtimes** that occur due to lack of lubrication.
- Optimal lubrication offers the additional advantage of preventing **impurities or water from penetrating** the interior of the bearings.
- **Economical:** minimal lubricant consumption and significant savings on time and maintenance costs.

Free studies Definition Quotation Delivery

For

- Forage harvesters, presses, root crop harvesters, grape harvesting machines, combine harvesters, telehandlers, construction equipment etc.

Specifications

- 2 to 8-litre reservoir.
- Electric pump with programmable cycles.
- Pressure: 350 bar.
- Standard NLG12 lubricant.
- Temperature: up to -25°C.
- If lubrication "clogs" the system, it will lock followed by an acoustic or visual alarm.

Hydrokit has developed installation diagrams adapted to the major brands of machines on the market: Case, Claas, New Holland, John Deere, etc. Specific studies can be executed by a team of technicians.

Lubricant catalogue available on request

Reference

Make	Model	Reference
CLAAS	Lexion 500/600	**KG061B13V1**
	Lexion 700	**KG061B14V1**
	Jaguar 800 series	**KG061E02A1**
JOHN DEERE	7000 series forage harvester	**KG090E02A2**
	6000 series forage harvester	**CGEJD 36G**
NEW HOLLAND	FR series forage harvester	**KG092E09V1**
	FX38, FX48, FX58 series forage harvester	**CGE3FIATNH**
	FX40 series forage harvester	**CGE4FIATNH**
	BB9000 bale press	**KG067R02V1**

Vital for optimised lubrication of equipment.

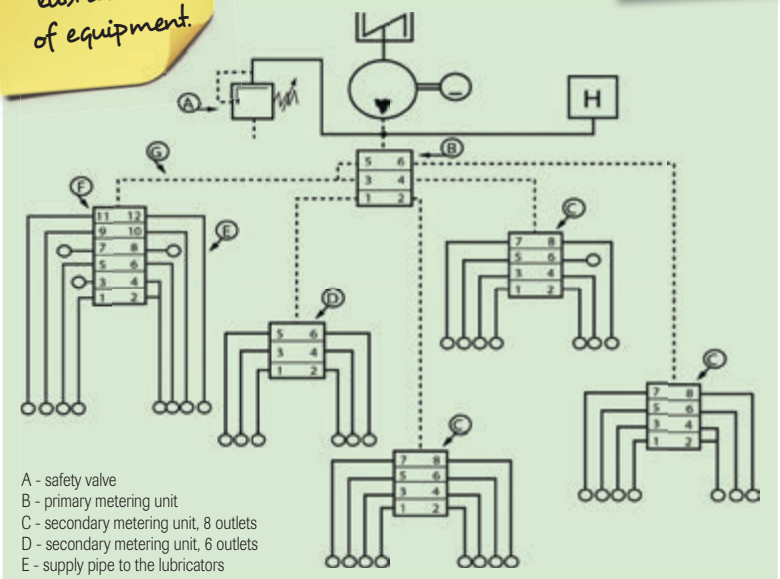

A - safety valve
B - primary metering unit
C - secondary metering unit, 8 outlets
D - secondary metering unit, 6 outlets
E - supply pipe to the lubricators
F - secondary metering unit, 12 outlets
G - main pipe
H - function and safety box

LINKING OF LUBRICATION POINTS

Linking of lubrication points is designed to facilitate and ensure maintenance operations by bringing the individually located lubricators on a machine to a regrouping strip using the following various tubes, hoses and the connectors:

COPY AND FAX THIS PAGE

Linking of up to 10 points

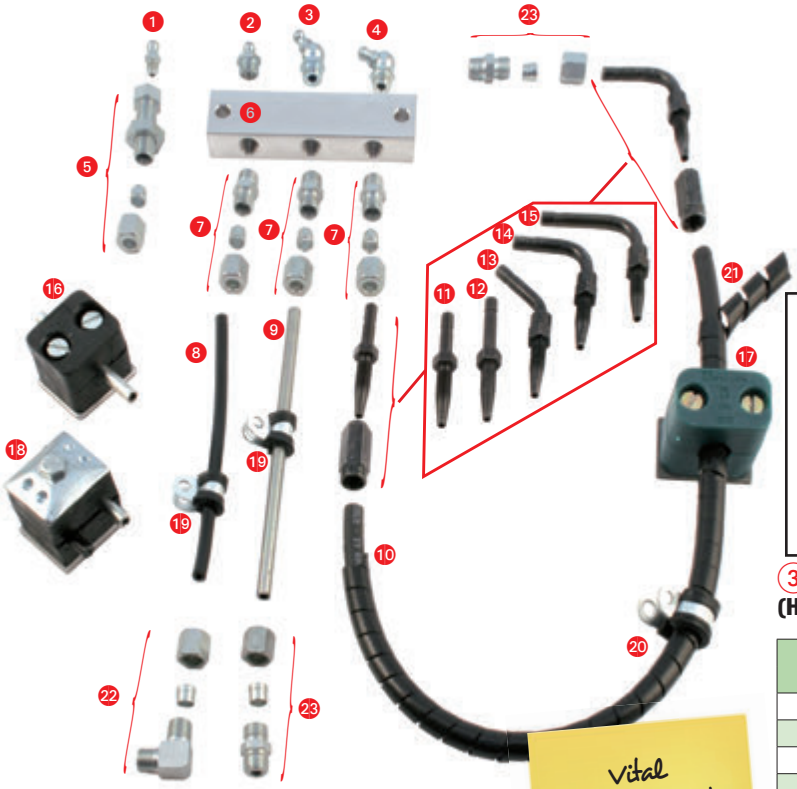

Vital for optimised lubrication of equipment.

Item	Type	Reference	Qty
1	Straight	GR6X100	
2	Straight	GR10X100	
3	45° elbow	GR10X10045	
4	90° elbow	GR10X10090	

Item	Number of lubricators	Reference			Qty
		Partition channel	Nut	Ring	
5	1	SGPC	E06X	B06X	

Item	Number of stations	Reference	Qty
6	1	CGCB1G	
	3	CGCB3G	
	5	CGCB5G	
	10	CGCB10G	

Item	Reference			Qty
	Male union	Nut	Ring	
7	UM06X1010K	E06X	B06X	

Item	Type	ø (mm)	Reference	Qty (m)
8	Semi-rigid	6	POLY615G	
9	Zinc-plated tube	6	TH0406Z	
10	Flexible	8.4	POLY8421G	

QUOTE REQUEST

1 **Enter the quantities in the table below in accordance with your requirements.**

2 **Fill out the form below and stamp it with the company stamp.**

Company: .....

Contact person: .....

Position: .....

Email: .....

Address: .....

.....

Postcode: .....

City: .....

Phone: .....

Company stamp:

3 **Fax a quotation request to +33 (0) 2 51 34 12 66 (HEADQUARTERS) OR +44 (0) 1728 684 808 (UK)**

Item	Type	Reference		Qty
		Nipple	Skirt	
11	Straight	06EL06X	JR106X	
12	Long straight	06EL06XL	JR106X	
13	45° elbow	06DT06X	JR106X	
14	Short 90° elbow	06CL06XC	JR106X	
15	90° elbow	06CL06X	JR106X	

Item	Collar type	ø (mm)	Reference	Qty
16	Single weld	6	CS06	
17	Single weld	12	CS12	
18	Double weld	6	CD06	
19	Rubber	6	CC06	
20	Rubber	12	CC12	
21	Protective sheath	12	RP12P (1)	
(1) sold by the meter				

Item	Thread bearing side	Reference			Qty
		Elbow	Nut	Ring	
22	M6X100	CM06X0610K	E06X	B06X	
	M8X100	CM06X0810K	E06X	B06X	
	M8X125	71060071	E06X	B06X	
	M10X100	CM06X1010K	E06X	B06X	
	1/8 BSP	CM06X018K	E06X	B06X	
	¼ BSP	CM06L014K	E06L	B06LS	

Item	Thread bearing side	Reference			Qty
		Union	Nut	Ring	
23	M6X100	UM06X0610K	E06X	B06X	
	M8X100	UM06X0810K	E06X	B06X	
	M8X125	71060072	E06X	B06X	
	M10X100	UM06X1010K	E06X	B06X	
	1/8 BSP	UM06X018K	E06X	B06X	
	¼ BSP	UM06L014K	E06L	B06LS	

SINGLE-POINT LUBRICATION

Single-point lubrication is the first step toward automatic centralised lubrication. It is designed to facilitate and ensure maintenance operations by bringing the individually located lubricators on a machine towards a gradual distributor via various tubes, hoses and connectors.

With a single lubricator you can supply up to 22 bearings.

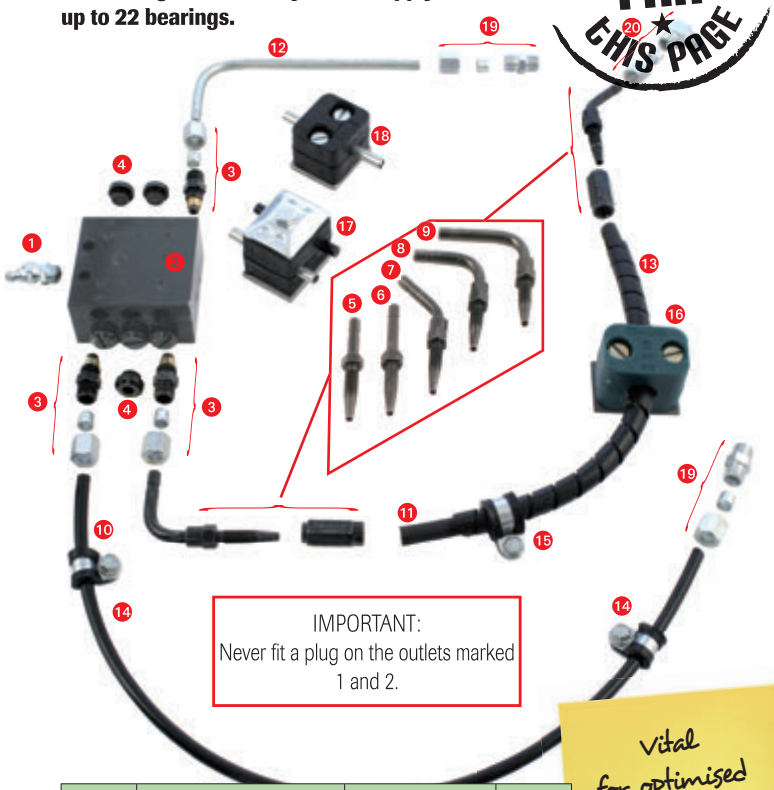

IMPORTANT:
Never fit a plug on the outlets marked 1 and 2.

COPY AND FAX THIS PAGE

Vital for optimised lubrication of equipment.

Item	Type	Reference	Qty
1	Straight	GR018	
	45° elbow	GR01845	
	90° elbow	GR01890	

Item	Number of stations	Reference	Qty
2	6	SSV6	
	8	SSV8	
	10	SSV10	
	12	SSV12	
	14	SSV14	
	16	SSV16	
	18	SSV18	
	20	SSV20	
	22	SSV22	

Item	Reference			Qty
	Valve	Nut	Ring	
3	CAR06X	E06X	B06X	

Item	Cap reference	Qty
4	BM10100	

Item	Type	Reference		Qty
		Nipple	Skirt	
5	Straight	06EL06X	JR106X	
6	Long straight	06EL06XL	JR106X	
7	45° elbow	06DT06X	JR106X	
8	Short 90° elbow	06CL06XC	JR106X	
9	90° elbow	06CL06X	JR106X	

QUOTE REQUEST

1 Enter the quantities in the table below in accordance with your requirements.

2 Fill out the form below and stamp it with the company stamp.

Company: .....

Contact person: .....

Position: .....

Email: .....

Address: .....

.....

Postcode: .....

City: .....

Phone: .....

Company stamp:

3 Fax a quotation request to +33 (0) 2 51 34 12 66 (HEADQUARTERS) OR +44 (0) 1728 684 808 (UK)

Item	Type	ø (mm)	Reference	Qty (m)
10	Semi-rigid	6	POLY615G	
11	Flexible	8.4	POLY8421G	
12	Zinc-plated tube	6	TH0406Z	

Item	Collar type	ø (mm)	Reference	Qty
13	Protective sheath	12	RP12P (1)	
14	Rubber	5	CC06	
15	Rubber	12	CC12	
16	Single weld	12	CS12	
17	Double weld	6	CD06	
18	Single weld	6	CS06	
(1) sold by the meter				

Item	Thread Bearing side	Reference			Qty
		Union	Nut	Ring	
19	M6X100	UM06X0610K	E06X	B06X	
	M8X100	UM06X0810K	E06X	B06X	
	M8X125	71060072	E06X	B06X	
	M10X100	UM06X1010K	E06X	B06X	
	1/8 BSP	UM06X018K	E06X	B06X	

Item	Thread Bearing side	Reference			Qty
		Union	Nut	Ring	
20	M6X100	CM06X0610K	E06X	B06X	
	M8X100	CM06X0810K	E06X	B06X	
	M8X125	71060071	E06X	B06X	
	M10X100	CM06X1010K	E06X	B06X	
	1/8 BSP	CM06X018K	E06X	B06X	
	¼ BSP	CM06L014K	E06L	B06LS	

HYDRAULIC BRAKE KITS FOR TRACTORS

- Hydraulically-controlled brake spool valve for tractors.
- As soon as the tractor's brake system is activated, the original master cylinder (partially) feeds the specific brake spool valve control, proportional to the force applied to the pedal.
- Trailer braking is proportional.
- The spool valve adapts to tractors equipped with a master cylinder and hydraulic actuator braking system.
- Contact us for customised kits.

Technical information

- Legislation prohibits trailer brakes supplied by a spool valve without a control that is proportional to the force (e.g.: a single-acting spool valve).

External piping diameter (mm)	Kit reference for LHM mineral oil	Kit reference for DOT 4 - Lockheed synthetic oil
4 or 5 or 6	**404500V2**	**404600**
4.78	**KF000M02V1**	**KF000L02V1**
6.35	**KF000M03V1**	**KF000L03V1**

MECHANICAL BRAKE KITS FOR TRACTORS

- Mechanically-controlled brake spool valve for tractors.
- When the tractor's brake pedals are activated, a master cylinder fitted to the existing mechanism is subjected to tensile stress. This cylinder transmits a control pressure to the brake spool valve that is proportional to the force applied to the pedal.
- Trailer braking is proportional to the force applied to the tractor brake.

Reference: 404400

AGRICULTURAL TRACTOR PUMPS

BOBARD

Type of tractor	OEM reference	Description	Rotation	Displ. (cm³)	HYDROKIT version	ORIGINAL version	Illustr.
MV PX 55	68162005	Lifting + Steering	R	16 + 6		**P003010S**	
M75	68161002	Auxiliary	R	6		**P003014S**	
CC55 CC70 M75 620 621	68161009	Auxiliary	R	15	**P003015F**		
M30 K30 K35 K40 K42		Auxiliary	L	8		**P003016S**	
K53		Auxiliary	R	15		**P003017S**	
K42 power-assisted or hydrostatic steering M 55 MWM engine		Auxiliary	L	15	**P003018F**	**P003018S**	
K42 M45 M55		Auxiliary	L	15		**P003019S**	
PX 70			R	16 + 8		**P003021S**	
595			R	14 + 14		**P003024S**	
7077			R	11		**P003022S**	
CC72			R	17		**P003023S**	
		Lifting + Steering	R	14 + 8		**P003025H**	
			R	17 + 17		**P003026S**	

CARRARO

Type of tractor	OEM reference	Description	Rotation	Displ. (cm³)	HYDROKIT version	ORIGINAL version	Illustr.
4800		Lifting + Auxiliary	L	11		**P004002S**	
7000		Lifting	R	15		**P004003S**	
451.4 481.4 571.4 581.4		Lifting	L	11	**P004004F**		
321		Lifting	R	11	**P004005F**		
451.4 481.4 571.4 581.4		Lifting + Steering	L	15 + 11		**P004006S**	
450 4500		Lifting	L	16		**P004007S**	
766		Lifting + Steering	R	11 + 6.5		**P004009S**	
SUPER TIGER		Lifting	L	14		**P004010S**	
750 RS		Lifting	R	19		**P004011S**	
CHAIN TRACK Tigetrac 3800 HST 4=wheel drive		Lifting	R	11		**P004012S**	
601	6000101189	Lifting + Steering	L	11 + 8.5		**P004015S**	

DAVID BROWN

Type of tractor	OEM reference	Description	Rotation	Displ. (cm³)	HYDROKIT version	ORIGINAL version	Illustr.
1200 1210 1212 1390 1410 1412	K928578 K919048	Lifting	L	11		**P005001S**	
1294 1390 1394 1490 1494 1594 1690 1694	K307945 K449605 K200337 K946605	Lifting	L	19	**P005003F**	**P005003S**	
1210 1212 1390 1394 1410 1412 1490 1494 1594 1690 1694	K307945 K949605 K944907 K200916	Lifting	L	15	**P005004F**	**P005004S**	
1390 1394 1490 1494 1594	K916535 K956447 K954263	Lifting + Auxiliary	L	15 + 11	**P005005F**	**P005005S**	
580S 1210 1212 1294 1390 1394 1490 1494 1594 1690 1694	K953152C K207451 K944944 K956695 K260490 K957318 K206095 K953152 K206595 K205653 K207625	Steering	L	10		**P005006S**	
880 885 990 995 1190 1290	K927097 K928578 K962635 K962635 K962688 K917541 K918995	Lifting				**P005007S**	
1594 1674 1690 1694	K310380 K205598 K952465 K310386 C952465C 405432R91	Lifting + Auxiliary	L	19 + 14	**P005008F**	**P005008S**	
990 1212	K918993 K948432	Lifting	L			**P005009S**	**N/A**
1194 1294 1390	K913394 K919372 K961023 K961024 K917695 K913744 K904768 K901637					**P005011D**	**N/A**

AGRICULTURAL TRACTOR PUMPS (CONT.)

CASE IH

Type of tractor	OEM reference	Description	Rotation	Displ. (cm³)	HYDROKIT version	ORIGINAL version	Illustr.
McCORMICK 135 137 235 237 265	762309R91 762226R91 762990R97 762896R97 756130R92 756530R92 762418R92 762418R92	Lifting	R	6	**P021001A**		
B250 B275 B414 B434 B444	704330R95 704330R93	Lifting	R	11		**P021002S**	
353 383 423 433 453 523 533 553 633	3145248R92	Lifting	L	8	**P021003F**		
624 644 654 724 734 744 824 844	3145248R93	Lifting	L	8	**P021004F**		
523 553 624 654 724 734 824 834 844 946 1046 1246	3145619R91 314619R92 3146450R91	Lifting + Steering	L	8 + 6	**P021005F**	**P021005B**	
633 644 645 733 743 744 745 833 840 844 845	3147535R92 3147535R93 3147535R94 3147535R92	Lifting + steering (2 rear openings)	L	8 + 8	**P021006F**	**P021006B**	
WITHOUT SENS O DRAULIC							
743 XL 745 XL 844 XL 845 XL	1328655C91 1986961C91	Lifting + Steering	L	8 + 8		**P021038B**	
WITH SENS O DRAULIC							
745XL 845XL 856XL	3401189R92 3401189R93 3401189R94	Lifting + Steering	L	8 + 8		**P021007B**	
	3401189R92 3401189R93 3401189R94		L	11 + 8	**P021025F**		
523 553 624 654 724 734 824 834 946 1046 1045 1246	3146446R91 3146446R92 3146446R93 3148938R92 3142096R91	Lifting + Steering (2 rear openings + divider + Low pressure)	L	11 + 8	**P021009F**	**P021009B**	

CASE IH

Type of tractor	OEM reference	Description	Rotation	Displ. (cm³)	HYDROKIT version	ORIGINAL version	Illustr.
OLD MODEL							
955 1055 956 XL 1056 XL	3223932R92 3223932R93 8988OC91	Lifting + steering (2 rear openings + valve)	L	11 + 8	**P021010F**	**P021010B**	
NEW MODEL							
XL SERIES: 956 XL 1055 XL 1056 XL	3220221R92 3220221R93	Lifting + steering (2 rear openings)	L	11 + 8	**P021011F**	**P021011B**	
XL SERIES: 1255 XL 1455 XL	3226942R92 3226942R93	Lifting + Steering	L	14 + 11		**P021012B**	
XL PLUS SERIES: 845 856 955 956 1056	89880C91	Lifting + Steering	L	11 + 8		**P021017B**	
2000 SERIES: 2120 2130 2140 2150	1967851M91	Steering	L	8		**P021013S**	
2000 SERIES: 2120 2130 2140 2150	301022A1 B506077 1967851C1	Lifting	R	26		**P021014S**	
VINEYARD 2120 2130 2140	1530459C1 1967852C1	Lifting	R	17	**P021015F**	**P021015B**	
MWM ENGINE: 1st GENERATION							
C SERIES: C55 C64 C70A CS SERIES: CS78 CS86 CS88 CS94	155700750002	Lifting + Steering	L	16 + 11	**P021016F**	**P021016B**	
SISU ENGINE: 2nd GENERATION							
CS SERIES: CS78 CS80 CS86 CS88 CS94 CS100	132375101	Lifting + Steering	L	22 + 16		**P021019B**	
CX SERIES: CX50 CX60 CX70 CX80 CX90 CX100 3000 SERIES: 3210 3220 3230 3240 4000 SERIES: 4210 4220 4230 4240	155700750003	Lifting + Steering	L	16 + 11	**P021016F**	**P021016B**	
CS SERIES: CS100 CS110 CS120 CS130 CS150	132575005	Lifting	R	32		**P021021B**	

Headquarters: +33 (0)2 51 34 10 10 / **UK:** +44 (0)1728 684 800

AGRICULTURAL TRACTOR PUMPS (CONT.)

CASE IH							
Type of tractor	OEM reference	Description	Rotation	Displ. (cm³)	HYDROKIT version	ORIGINAL version	Illustr.
CS SERIES: CS100 CS110 CS120 CS130 CS150	132575003	Lifting + Steering	R	38 + 16		**P021036W**	
MAXXUM SERIES 5120 5130 5140 5150	1343659C1 1343659C2	Main	L	28	**Standard exchange: REPMAXXUM**		
SERIES: 238 248 258 268 CX SERIES: CX80 CX90 CX100 95XL 3000 SERIES: 3210 3220 3230 4000 SERIES: 4210/4220 4230/4240 84 SERIES: 484 584 684 784 884 85 SERIES: 385 485 585 685 785 885 95 SERIES: 395 495 595 695 795 895 995 BD SERIES: 238 258 268 C SERIES: C50 C60 C70 C80 C90 STANDARD SERIES: 454 464 474 475 574 674 HYDRO SERIES: HYDRO84 HYDRO85	93835C91 406763R92 66513C92 308873A1 93835C92	Lifting + Steering	L	29		**P021018S**	
2140 2150	324628A1	Lifting + Steering	R	17 + 8		**P021024S**	

CASE IH							
Type of tractor	OEM reference	Description	Rotation	Displ. (cm³)	HYDROKIT version	ORIGINAL version	Illustr.
BD SERIES: 320 322 323 324 326 330 430 432 436 438 439 440	3054300R93	Lifting	R	8	**P021033F**		
844SB	3147535R93	Lifting + Steering	L	8 + 8		**P021034S**	
CS38 CS68 CS75	155700750017	Lifting + Steering	L	19 + 8		**P021040B**	**N/A**

Reference ending in:

F = Hydrokit PRODUCT
S = SAUER / PLESSEY
B = BOSCH
D = DOWTY / ULTRA
W = HAMWORTHY / DAVID BROWN
H = HPI
R = REXROTH
E = ENERFLUX / BENDIX
K = CASAPPA

- An extensive product range of pumps, motors and interchangeable components.
- A long-term guarantee of 24 months.
- The best value for money on the market.

AGRICULTURAL TRACTOR PUMPS (CONT.)

DEROT

Type of tractor	Description	Rotation	Displacement (cm³)	ORIGINAL version
	Lifting + Steering	R	12 + 8	**P006001H**
MWM engine				
DS22	Lifting + Steering	L	12 + 8	**P006003H**
D22	Lifting + Steering	L	12 + 4	**P006006H**
	Lifting + Steering	L	12 + 8	**P006010H**
FIAT engine				
DH33	Lifting + Steering	R	12 + 4	**P006007H**
LOMBARDINI engine				
H	Steering	R	6	**P006013S**
TR 65 TR 80 TR 85	Lifting + Steering	L	12 + 8	**P006004H**
RT 80	Lifting + Steering	L	18 + 8	**P006005H**
DTF 60	Lifting + Steering	R	12 + 8	**P006008H**
DTF65	Lifting + Steering	R	12 + 8	**P006009H**
DH22	Steering	R	12	**P006012H**
DS33	Lifting + Steering	L	12 + 8	**P006017 H**

- DEROT chart: Contact us

DEUTZ

Type of tractor	OEM reference	Description	Rotation	Displ. (cm³)	HYDROKIT version	ORIGINAL version	Illustr.
D30S D40S D40L D50 D55	3400535 1174507	Lifting	R	8		**P007001S**	
D25S D30S	1174515	Lifting	L	8	**P007003F**		
D8005	1178247	Lifting + Steering	L	11 + 8		**P007004S**	
D40L D55 D2505 D2506 D3005 D3006 D4005 D4006 D4505 D5005 D5506 D6005	2239042	Lifting	L	11	**P007005F**	**P007005S**	
D4006 D4506 D5006 D5206 D5505 D5506 D6006 D6206 D6806 D7006 D7206 D8006 D9006 D10006 DX30V DX36V DX50V DX55V DX160 DX3.10 DX3.30 DX3.50 DX3.70 DX3.90 DX7.10	1262595 1262596 1262637 1175995 1176003 4345674 1175995 1262595 1262596	Lifting	L	15	**P007007F**		

DEUTZ

Type of tractor	OEM reference	Description	Rotation	Displ. (cm³)	HYDROKIT version	ORIGINAL version	Illustr.
D4007 D4507 D5207C D6007C D6207C D6507C D6807C D7207C D7807C DX36V DX50V DX55 DX160 DX710 INTRAC2002 INTRAC2003 INTRAC2004	1262597 1175656 4309354	Lifting	L	17	**P007008F**	**P007008S**	
D5005D D6005D D9005D D6806D D7206D D6207 D6507C D6507 D8006 D9006 D10006 DX3.10V DX3.30V DX3.50V DX3.70V DX140 DX160 DX3.60 INTRAC2003 INTRAC2004	1262644 1176453 1175997 4309355 4345363 1175997	Lifting + Steering	L	19	**P007009F**	**P007009S**	
DX140 DX160 DX7.10	1174406 4311477 1175996 1176453	Lifting	L	22	**P007010F**	**P007010S**	
D8006 D10006 D13006 D6807 D6807C D7207 D7207C D7007 D7807 D7807C DX80 DX86 DX92 DX3.60 DX3.65 DX3.70 DX4.10 DX4.30 DX4.31 70.90VF	1176000 1262645 2333314 4309356	Lifting + Steering	L	16 + 11	**P007011F**	**P007011B**	
DX85 DX90 DX110 DX120 DX145	4311475 4345365 4345372 1175992	Lifting + Steering	L	16 + 14	**P007012F**	**P007012B**	
DX80 DX86 DX92 DX3.90S DX4.31 DX4.50 DX4.51 DX4.61 DX4.70 DX4.71 DX6.05	1174210 4342472 1174211	Lifting + Steering	L	19 + 11	**P007013F**	**P007013B**	

Part numbers ending in:

F = Hydrokit PRODUCT
S = SAUER / PLESSEY
B = BOSCH
D = DOWTY / ULTRA
W = HAMWORTHY / DAVID BROWN
H = HPI
R = REXROTH
E = ENERFLUX / BENDIX
K = CASAPPA

Headquarters: +33 (0)2 51 34 10 10 / **UK:** +44 (0)1728 684 800

AGRICULTURAL TRACTOR PUMPS (CONT.)

DEUTZ							
Type of tractor	OEM reference	Description	Rotation	Displ. (cm³)	HYDROKIT version	ORIGINAL version	Illustr.
DX230 DX250		Steering	R	19		**P007014S**	
DX230 DX250		Lifting	L	33		**P007016S**	
D55		Lifting	R	14		**P007020S**	
D30005 D30006		Lifting + Steering	L	11		**P007021S**	
DX140 DX140A DX7.10	O1173717	Lifting	R	19		**P007025B**	
AGROTRON 6.05		Lifting	L	31		**P007026S**	
AGROSON AGROSUN 120		Lifting	L	22		**P007033S**	**N/A**
AGROVECTOR 30.7						**P007034A**	**N/A**
AGROSTAR							
6.08 6.11 6.21 6.28 6.31 6.38 6.61	O1179086 O1179086 4311478 O1175999	Lifting + Steering	L	22 + 14	**P007015F**	**P007015B**	
4.61 4.68 4.71 4.78	O1174210	Lifting + Steering	L	19 + 11	**P007013F**	**P007013B**	
6.71 6.81	O4401451	Lifting + Steering	R	22 + 8		**P007024S**	
AGROCOMPACT							
3.30V 3.50V 3.70V 3.30F 3.50F 3.70F 3.90F 3.50S 3.90S	O1178247	Lifting + Steering	L	11 + 8		**P007004S**	
3.30V 3.50V 3.70V 3.30F 3.50F 3.70F 3.90F 3.50S 3.90S	O1176000	Lifting + Steering	L	16 + 11	**P007011F**	**P007011B**	
AGROXTRA							
DX4.17 4.07 4.17 4.17H	O1262591 O1262644 O2333071 O2382915 O4309355 O4345363	Lifting	L	19	**P007009F**	**P007009S**	
DX4.17 DX4.57 DX6.07 4.07 4.17 4.17H	O1176000	Lifting + Steering	L	16 + 11	**P007011F**	**P007011B**	
4.47 4.57 4.57H 6.07	O1174210	Lifting + Steering	L	19 + 11	**P007013F**	**P007013B**	
6.17	O1179086 O1179086 4311478 O1175999	Lifting + Steering	L	22 + 14	**P007015F**	**P007015B**	

DEUTZ							
Type of tractor	OEM reference	Description	Rotation	Displ. (cm³)	HYDROKIT version	ORIGINAL version	Illustr.
AGROPRIMA							
4.31	O1176000	Lifting + Steering	L	16 + 11	**P007011F**	**P007011B**	
4.51 4.56 6.06	O1174210	Lifting + Steering	L	19 + 11	**P007013F**	**P007013B**	
6.16	O1179086 O1179086 4311478 O1175999	Lifting + Steering	L	22 + 14	**P007015F**	**P007015B**	
AGROPLUS							
60 70 75 80 85 95 100	245299200 245393100 245397900 245399200 24599200	Lifting	L	15	**P007007F**		
60 70 80	245390900	Lifting	L	19		**P007017S**	
75 85 95 100	245396300 245396200 245297800	Lifting	R	22		**P007018S**	
70			R	11		**P007032H**	
HOPFEN							
4.17A 4.57A	O1176000	Lifting + Steering	L	16 + 11	**P007011F**	**P007011B**	

DEUTZ PUMPS, CONTINUED ... ON THE FOLLOWING PAGE

AGRICULTURAL TRACTOR PUMPS (CONT.)

DEUTZ

Type of tractor	OEM reference	Description	Rotation	Displ. (cm³)	HYDROKIT version	ORIGINAL version	Illustr.
4.57A	O1174210	Lifting + Steering	L	19 + 11	**P007013F**	**P007013B**	
4.17A	O1262591 O1262644 O2333071 O2382915 O4309355 O4345363	Lifting	L	19	**P007009F**	**P007009S**	
AGROTRON MK1							
4.70 4.80 4.85 4.90 4.95 6.00 6.01 6.05 6.15 6.20 6.30 6.45	O4427374 O44273744	Lifting	L	28		**P007028B**	
80 85 90 100 105 106 110 115 120 135 150 160 175 200 230 260	O4413970	Lifting	L	25		**P007029B**	**N/A**
	O4427374 O44273744	Lifting	L	28		**P007028B**	
AGROTRON MK3							
80 85 90 100 105 106 110 115 120 135 150 160 175 200 230 260	132575005	Lifting	R	32		**P007031B**	**N/A**
	O4450709 O5047286	Lifting + Steering	L	32 + 14		**P007030B**	**N/A**

FAUCHEUX

Type of tractor	Rotation	Displacement (cm³)	ORIGINAL version
F 155	L	27	**P065001D**
Faucheux loader	L	16	**P065002H**
P27S backhoe	R	27	**P065003H**
F 50	R	33	**P065004S**
GP25D		7 pistons	**P065005R**

FENDT

Type of tractor	OEM reference	Description	Rotation	Displ. (cm³)	HYDROKIT version	ORIGINAL version	Illustr.
FARMER CLASSIQUE							
2 2S	G144940013010 G144940013011 G238401100012 G278940100019 G281940100010	Lifting	L	16	**P008001F**	**P008001S**	
3S 4S 5S 255GT 275GT 103S 104S 105S 106S 108S 260S 303LS 304LS 305LS 306LS 308LS 309LS	G138861010 011 G144940012 010 G238401100 012	Lifting	L	16	**P008001F**	**P008001S**	
104S 105 106 LS203 275GT 600LS 600LSA 275S	G278941100 G27894110010	Lifting	L	19	**P008002F**	**P008002S**	
610 611LS 104S	G144940600001 245292900	Lifting	L	11	**P008003F**		
1D 1E 1Z Fix2E	G231941010010	Lifting	L	8		**P008017S**	
FARMER 100							
103LS 103LSA 103S 103SA	G178940010010 G117940011010	Lifting + Steering	L	16 + 14	**P008011F**	**P008011B**	
102 102S 102SA 103 103S 103SA 104LS 104S 104SA 104S 105 105LS 105LSA 105S 106LS 106LSA 106S 106SA 108LS 108LSA 108S 108SA	G144940012010	Lifting	L	14	**P008004F**	**P008004S**	
	G144940013010 G144940013011 G238401100012 G278940100019 G281940100010	Lifting	L	16	**P008001F**	**P008001S**	
	G281940010010	Lifting	L	19		**P008007S**	

FENDT PUMPS, CONTINUED
... ON THE FOLLOWING PAGE

Headquarters: +33 (0)2 51 34 10 10 / UK: +44 (0)1728 684 800

AGRICULTURAL TRACTOR PUMPS (CONT.)

FENDT

Type of tractor	OEM reference	Description	Rotation	Displ. (cm³)	HYDROKIT version	ORIGINAL version	Illustr.
FARMER 200							
200S 200SA 200V 200VA 203P 203P/II 203PA 203PA/II, 203V 203V/II 203VA 203VA/II	G144940012010	Lifting	L	14	**P008004F**	**P008004S**	
	G144940013010 G144940013011 G238401100012 G278940100019 G281940100010	Lifting	L	16	**P008001F**	**P008001S**	
200S 200SA	G380940010110	Lifting + Steering	L	16 + 11	**P008009F**	**P008009B**	
204P 204PA	G178940010010 G117940011010	Lifting + Steering	L	16 + 14	**P008011F**	**P008011B**	
200V 200VA	G155940010010	Lifting + Steering	L	11 + 8		**P008018B**	
FARMER 300							
304LS 304LSA 305LS 305LSA 306LS 306LSA 307LS 307LSA 308LS 308LSA 309LS 309LSA 310LSA 311LSA 312LSA	G178940010010 G117940011010	Lifting + Steering	L	16 + 14	**P008011F**	**P008011B**	
300LS 306LSA 307 307C 308 308C 309 309C	G117941010011	Lifting + Steering + Auxiliary	L	16 + 14 + 8		**P008019B**	
FARMER 500							
509 510 511 512 514 515	G144940013010 G144940013011 G238401100012 G278940100019 G281940100010	Lifting	L	16	**P008001F**	**P008001S**	
FAVORIT 600							
600LS 600LSA 610LS 610LSA 610S 610SA 611LS 611LSA 611S 611SA 612LSA 612SA 614LSA 614SA 615LSA 622LSA 626LSA	G144940012010	Lifting	L	14	**P008004F**	**P008004S**	
	G144940013010 G144940013011 G238401100012 G278940100019 G281940100010	Lifting	L	16	**P008001F**	**P008001S**	
	G281940010010	Lifting	L	19		**P008007S**	
	G385940100010	Steering	L	19		**P008015B**	
	G285940010010	Lifting	L	22	**P008005F**	**P008005S**	
	G385940010010	Lifting + Steering	L	22 + 14	**P008010F**	**P008010B**	
	G385940010010	Lifting + Steering	L	19 + 11	**P008013F**	**P008013B**	
	G385941010010	Lifting + Steering + Auxiliary	L	19 + 11 + 2		**P008014B**	

FENDT

Type of tractor	OEM reference	Description	Rotation	Displ. (cm³)	HYDROKIT version	ORIGINAL version	Illustr.
610LSA	G183860010011	Lifting	L	16		**P008006S**	
610S 611LSA 612LSA 614LSA 615LSA		Lifting + Steering	L	19 + 11	**P008012F**	**P008012B**	
GT series tool holder							
F250GT F275GT F275GTII	G144940012010	Lifting	L	14	**P008004F**	**P008004S**	
F231GT	G231941010010	Lifting	L	8		**P008017S**	
F370GT F370GTA F380GT F380GTA F380GTH	G380940010110	Lifting + Steering	L	16 + 11	**P008009F**	**P008009B**	
F390GTA F395GTA	G395940010011	Lifting + Steering + Auxiliary	L	16 + 11 + 14		**P008016B**	
F231GT F250GT F275GT F275GTII	G144940013010 G144940013011 G238401100012 G278940100019 G281940100010	Lifting	L	16	**P008001F**	**P008001S**	
GT KOMMUNAL SERIES							
F250GT Kommunal F275GT Kommunal F275GTAII Kommunal F275GTII Kommunal	G144940012010	Lifting	L	14	**P008004F**	**P008004S**	
F231GT Kommunal	G231941010010	Lifting	L	8		**P008017S**	
F231GT Kommunal F250GT Kommunal F275GT Kommunal F275GTAII Kommunal F275GTII Kommunal	G144940013010 G144940013011 G238401100012 G278940100019 G281940100010	Lifting	L	16	**P008001F**	**P008001S**	
XYLON SERIES							
520 522 524	G144940013010 G144940013011 G238401100012 G278940100019 G281940100010	Lifting	L	16	**P008001F**	**P008001S**	

AGRICULTURAL TRACTOR PUMPS (CONT.)

FIAT							
Type of tractor	OEM reference	Description	Rotation	Displ. (cm³)	HYDROKIT version	ORIGINAL version	Illustr.
SOMECA							
SOM20D SOM25D	569307 19001316 1930044 1930056 5120971 7606271 79967930	Lifting	R	6.5	**P009001F**		
SOM715	1901319 1930052 5130127 5179732 569309	Lifting or Steering	L	8	**P009003F**		
SOM35	1930056 1930044 1901320 5130133 1901316 5120971 569307 76062717 9967930 5179724 568162	Steering	R	8	**P009006F**		
SOM612 SOM615 SOM715	1901321 1901323 1930046 1930058 5129478 5179730 569306 8280040	Lifting	L	11	**P009011F**	**P009009S**	
		Lifting	L	15	**P009012F**	**P009012S**	
UNIVERSAL							
UTB 445 UTB 445 UTB 450 UTB 600	1901322 1930049 1930061 5129481 5179722 8273385	Lifting	R	11	**P009007F**		
CLASSIC SERIES							
200R 211 215C 220 250 250DT 300 300DT 300J 350 350DTS 400 400DT 411 415 420 440 446 450 450DT 455 460 470 480 480DT 500 500DT 500SDT 540 540SDT 555 640DT 650 656 715 850 850DT	1901319 1930052 5130127 5179732 569309 570140 5132792	Lifting or Steering	L	8	**P009003F**		

FIAT							
Type of tractor	OEM reference	Description	Rotation	Displ. (cm³)	HYDROKIT version	ORIGINAL version	Illustr.
550 570 580 600 640 650 670 680 750 780 880 980	1901321 1901323 1930046 1930058 5129478 5179730 569306 8280040	Lifting	L	11	**P009011F**	**P009009S**	
		Lifting	L	15	**P009012F**	**P009012S**	
500 550 570 580 600 640 650 670 680 750 780 880 980	1901321 1901323 1930046 1930058 5129478 5179730 569306 8280040	Lifting	L	11		**P009009S**	
OM35 300 350 350DT 355 355C 411 411C 415 420 455 450CE 470 505 850 1000 45.46 80C 100C	1930056 1930044 1901320 5130133 568309 1262637 1175995 568162	Lifting or Steering	R	8	**P009005F**	**P009005S**	

FIAT PUMPS, CONTINUED ... ON THE FOLLOWING PAGE

Part numbers ending in:

F = Hydrokit PRODUCT
S = SAUER / PLESSEY
B = BOSCH
D = DOWTY / ULTRA
W = HAMWORTHY / DAVID BROWN
H = HPI
R = REXROTH
E = ENERFLUX / BENDIX
K = CASAPPA

Headquarters: +33 (0)2 51 34 10 10 / **UK:** +44 (0)1728 684 800

AGRICULTURAL TRACTOR PUMPS (CONT.)

FIAT							
Type of tractor	OEM reference	Description	Rotation	Displ. (cm³)	HYDROKIT version	ORIGINAL version	Illustr.
400 400DT 411 411R 415 415DT 420 420DT 466 466DT 550 550DT 566 566DT 570 580 580DT 600 600DT 640 650 650DT 670 670B 670H 680 680H 680DT 750 750DT 780 780DT 850 850DT 880 880DT 900 900DT 940 940DT 940 1000 1000DT 1000N 1000S 1000SDT 1000 Sup 1300 1300DT 1300S 1300SDT OM650 OM850 OM850DT	1930056 1930044 1901320 5130133 1901316 5120971 569307 76062717 9967930 5179724 568162	Steering	R	8	**P009006F**		
350 350DT 400 400DT 450 450DT 466 466DT 480 480DT 500 500DT 540 540DT 540S 566 666 766 980	1901322 1930049 1930061 5129481 5179722 8273385	Lifting	R	11	**P009007F**		

FIAT							
Type of tractor	OEM reference	Description	Rotation	Displ. (cm³)	HYDROKIT version	ORIGINAL version	Illustr.
1000 1000DT 1000N 1000S 1000 Sup 1180 1180DT 1280 1280DT 1380 1380DT 1580 1580DT 1880 1880DT	1909916 1930226 5113283 5120850 5129488 5169770 8273957 8280131 9967927	Lifting	L	15	**P009013F**		
		Lifting	L	19	**P009014F**	**P009018S**	
980 1180 1180DT 1380 1380DT 1580 1580DT 1880 1880DT	1909917 1930285 1930317 5113075 5120851 98307212	Steering	R	15	**P009016Y**		
900 1000 1000DT 1000N 1000S 1000SUP	1901326 1930398 8282449	Lifting	L	19	**P009017F**		
56 SERIES							
60-56L 65-56 65-56DT	245293100 5086286 5094391 5129483 5169772 5179719	Lifting	L	15	**P009010F**		
66 SERIES							
60-66 60-66DT 62-86F 70-66 70-66DT 70-66F 70-66LP 72-86F 72-86LP 82-86 82-86LP	1901322 1930049 1930061 5129481 5179722 8273385	Lifting	R	11	**P009007F**		
45-66 45-66DT 45-66V 50-66 50-66DT 50-66S 55-66 55-66DT LP 60-66 60-66DT 65-66 65-66DT 70-66 70-66DT 70-66F 70-66LP 80-66 80-66DT 80-66F	245293100 5086286 5094391 5129483 5169772 5179719	Lifting	L	15	**P009010F**		
55-66 55-66DT LP 60-66 60-66DT 65-66 65-66DT 70-66 70-66DT 70-66F 70-66LP 80-66 80-66DT 80-66F	1909916 1930226 5113283 5120850 5129488 5169770 8273957 8280131 9967927	Lifting	L	15	**P009013F**		
		Lifting	L	19	**P009014F**	**P009018S**	

AGRICULTURAL TRACTOR PUMPS (CONT.)

FIAT							
Type of tractor	OEM reference	Description	Rotation	Displ. (cm³)	HYDROKIT version	ORIGINAL version	Illustr.
76 SERIES							
55-76F 55-76FDT 55-76V 55-76VDT 60-76F 60-76FDT 70-76DT 70-76F 70-76LP 70-76V 80-76DT 80-76F	245293100 5086286 5094391 5129483 5169772 5179719	Lifting	L	15	**P009010F**		
60-76F 60-76FDT 70-76DT 70-76F 70-76LP 70-76V 80-76DT 80-76F	1909916 1930226 5113283 5120850 5129488 5169770 8273957 8280131 9967927	Lifting	L	15	**P009013F**		
		Lifting	L	19	**P009014F**	**P009018S**	
86 SERIES							
55-86F 55-86FDT 55-86V 55-86VDT 60-86F 60-86FDT 60-86V 60-86VDT 70-86V 72-86F 72-86LP 82-86DT 82-86F 82-86LP	245293100 5086286 5094391 5129483 5169772 5179719	Lifting	L	15	**P009010F**		
50-86 50-86V 55-86F 55-86FDT 55-86V 55-86VDT 60-86F 60-86FDT 60-86V 60-86VDT 72-86F 72-86LP 82-86DT 82-86F 82-86LP	1909916 1930226 5113283 5120850 5129488 5169770 8273957 8280131 9967927	Lifting	L	15	**P009013F**		
		Lifting	L	19	**P009014F**	**P009018S**	
88 SERIES							
70-88 70-88DT 80-88 80-88DT	245293100 5086286 5094391 5129483 5169772 5179719	Lifting	L	15	**P009010F**		
55-88 55-88DT 60-88 60-88DT 65-88 65-88DT 70-88 70-88DT 80-88 80-88DT	1909916 1930226 5113283 5120850 5129488 5169770 8273957 8280131 9967927	Lifting	L	15	**P009013F**		
		Lifting	L	19	**P009014F**	**P009018S**	
	5128862 1930250 5128862 5167403 5180269	Steering	R	11	**P009015F**	**P009015B**	

FIAT							
Type of tractor	OEM reference	Description	Rotation	Displ. (cm³)	HYDROKIT version	ORIGINAL version	Illustr.
90 SERIES							
55-90 55-90DT 60-90 65-90 65-90DT 70-90 70-90DT 80-90 80-90DT 85-90 85-90DT 90-90 90-90DT 100-90 100-90DT 110-90 110-90DT 115-90 115-90DT 130-90 130-90DT 140-90 140-90DT	245293100 5086286 5094391 5129483 5169772 5179719	Lifting	L	15	**P009010F**		
	1909916 1930226 5113283 5120850 5129488 5169770 8273957 8280131 9967927	Lifting	L	15	**P009013F**		
		Lifting	L	19	**P009014F**	**P009018S**	
55-90 55-90 DT 60-90 65-90 65-90DT 70-90 70-90DT 80-90 80-90DT 85-90 85-90DT 90-90 90-90DT 100-90 100-90DT 110-90 110-90DT	5128862 1930250 5128862 5167403 5180269	Steering	R	11	**P009015F**	**P009015B**	
80-90 85-90 90-90 100-90 110-90 115-90 130-90 140-90 160-90 180-90	1909917 1930285 1930317 5113075 5120851 98307212	Steering	R	15	**P009016Y**		
130-90 13-90DT 14-90 140-90DT 160-90 160-90DT 180-90 180-90DT	1930267 51324400	Gearbox	R	19		**P009022B**	
93 SERIES							
60-93 60-93DT 65-93 65-93DT 72-93 72-93DT 82-93 82-93DT 88-93 88-93DT	245293100 5086286 5094391 5129483 5169772 5179719	Lifting	L	15	**P009010F**		
	1909916 1930226 5113283 5120850 5129488 5169770 8273957 8280131 9967927	Lifting	L	15	**P009013F**		
		Lifting	L	19	**P009014F**	**P009018S**	

Part numbers ending in:
F = Hydrokit PRODUCT
S = SAUER / PLESSEY
B = BOSCH
D = DOWTY / ULTRA
W = HAMWORTHY / DAVID BROWN
H = HPI
R = REXROTH
E = ENERFLUX / BENDIX
K = CASAPPA

FIAT PUMPS, CONTINUED
... ON THE FOLLOWING PAGE

Headquarters: +33 (0)2 51 34 10 10 / UK: +44 (0)1728 684 800

AGRICULTURAL TRACTOR PUMPS (CONT.)

FIAT

Type of tractor	OEM reference	Description	Rotation	Displ. (cm³)	HYDROKIT version	ORIGINAL version	Illustr.
94 SERIES							
60-94 65-94 65-94DT 72-94 72-94DT 82-94 82-94DT 88-94 88-94DT	245293100 5086286 5094391 5129483 5169772 5179719	Lifting	L	15	**P009010F**		
	245293100 5086286 5094391 5129483 5169772 5179719	Lifting	L	15	**P009013F**		
		Lifting	L	19	**P009014F**	**P009018S**	
	5128862 1930250 5128862 5167403 5180269	Steering	R	11	**P009015F**	**P009015B**	
72-94 4RM 88-94 82-94 4RM	1909917 1930285 1930317 5113075 5120851 98307212	Steering	R	15	**P009016Y**		
L SERIES							
L60 L65 L75 L85 L95	5129493 5169041 5179726	Lifting	R	22	**P009019F**	**P009019S**	
L60 L75 L85 L95	5149231 5162569 5167394 5167397 5180275 5180277	Steering	L	22		**P009020B**	**N/A**
M SERIES							
M100 M115 M135 M160	5129493 5169041 5179726	Lifting	R	22	**P009019F**	**P009019S**	
WINNER							
F100Dal F100Fino F110 F115 F120 F130 F140	5129493 5169041 5179726	Lifting	R	22	**P009019F**	**P009019S**	
	5149231 5162569 5167394 5167397 5180275 5180277	Steering	L	22		**P009020B**	**N/A**

FORD

Type of tractor	Manufacturer reference	Description	ORIGINAL version	Illustr.
SERIES				
231 233 333 335 515 532 420	83900640 83928509 83996336	Lifting	**P019019S**	
420 4550	81836736 83908243 83926104 83936585	Lifting	**P019011S**	
5550	81823983	Lifting + PTO	**P019013S**	
2120 231 233 333 335 4140 420 4550 5550	83917191 83924995 83958544 83959532 83959533 83959543 83959550 87759440	Steering	**P019020AS**	
4140 420 4450 4550	81824183	Lifting + PTO	**P019010S**	
5095	81826808	Lifting + PTO	**P019014S**	
6550	83908242 83908244 83926102 83936586	Lifting	**P019015S**	
00 SERIES				
4000 4100 4200 4400 4500	81824183	Lifting + PTO	**P019010S**	
3900 4100 4600	81836736 83908243 83926104 83936585	Lifting	**P019011S**	
5000 5100 5200 5900 7000 7100	81823983	Lifting + PTO	**P019013S**	

FORD PUMPS, CONTINUED ... ON THE FOLLOWING PAGE

AGRICULTURAL TRACTOR PUMPS (CONT.)

FORD				
Type of tractor	Manufacturer reference	Description	ORIGINAL version	Illustr.
5000 5100 5200 7000 7100 7200 7400 7600	81826808	Lifting + PTO	**P019014S**	
5600 5700 6600 6700 7400 7600 7700 8100 8600	83908242 83908244 83926102 83936586	Lifting	**P019015S**	
8000 8200 8600 8700 9000 9200 9600 9700	83903943	Lifting	**P019016S**	
2100 2600 3100 3300 3400 3500 3600 4100 4500	83900640 83928509 83996336	Lifting	**P019019S**	
2000 2100 2300 3000 3100 3300 3500 3600 3900 WITHOUT CAB 4000 4100 4200 4400 4500 4600 5000 5100 5200 5500 5600 6600 7000 7100 7600	83917191 83924995 83958544 83959532 83959533 83959543 83959550 87759440	Steering	**P019020AS**	
5900	83960261	Steering	**P019020BS**	
6600 6700 7600 7700	83959544 82840627	Steering	**P019021S**	
8700 9700	83924998 83917196	Steering	**P019030S**	
10 SERIES				
4110	81824183	Lifting + PTO	**P019010S**	
2810 2910 3910 4110 4610	81836736 83908243 83926104 83936585	Lifting	**P019011S**	

FORD				
Type of tractor	Manufacturer reference	Description	ORIGINAL version	Illustr.
5110 5610 5610S 6410 6610 6610S 6710 6810 6810S 7010 7410 7610 7610S 7710 7810 7810S 7910 8010 8210 8910	83957379	Lifting	**P019018S**	
2110 2310 2610 3310 3610 4410 5110 5610 5610S 6410 6610 6610S 6710 6810 6810S 7010 7410 7610 7610S 7710 7810 7810S 7910 8010 8210 8910	83900640 83928509 83996336	Lifting	**P019019S**	
2110 2310 2610 2810 2910 3310 3610 3910 4110	83917191 83924995 83958544 83959532 83959533 83959543 83959550 87759440	Steering	**P019020AS**	
5110 5610 (after 04/85) 5610S 6410 6610 (after 04/85) 6610S 6810 6810S 7010 7610 (after 4/85) 7610S 7810S 8010	83960261	Steering	**P019020BS**	
6410 6610 6710 7610 7710 7810 7910 8210	82840627 83959544	Steering	**P019021S**	

FORD PUMPS, CONTINUED
... ON THE FOLLOWING PAGE

Headquarters: +33 (0)2 51 34 10 10 / UK: +44 (0)1728 684 800

AGRICULTURAL TRACTOR PUMPS (CONT.)

FORD				
Type of tractor	**Manufacturer reference**	**Description**	**ORIGINAL version**	**Illustr.**
4610 5610 6610 7610	83959534 82858430	Steering	**P019022S**	
All after 04/99 5610S 6610S 6810S 7010 7610S 8010	81863560 81871528	Lifting	**P019029S**	
30 SERIES				
3230 3330 3430 3630 3830 3930 3930H 3930N 3930NO 4030 4130 4130N 4130NO 4230 4330 4430 4630 4630N 4630NO 4630O 4830 4830N 4830O 5030 5030O 8430 8530 8630 8730 8830	81836736 83908243 83926104 83936585	Lifting	**P019011S**	
8530 8630 8730 8830	83900640 83928509 83996336	Lifting	**P019019S**	
8530 8630 8730 8830	83945584	Lifting	**P019023S**	**N/A**
	81871789 83924997	Steering	**P019031S**	**N/A**
40 SERIES				
6640	83900640 83928509 83996336	Lifting	**P019019S**	
6640 6840 7740 7840	81863197	Auxiliary	**P019028S**	**N/A**
5640 6640 7740 7840 8240 8340	81863560 81871528	Lifting	**P019029S**	**N/A**
SKIDDED SERIES				
4190	81824183	Lifting + PTO	**P019010S**	
3190 4190 5190	81824183	Lifting + PTO	**P019010S**	
5190	81823983	Lifting + PTO	**P019013S**	
5190	81826808	Lifting + PTO	**P019014S**	

FORD				
Type of tractor	**Manufacturer reference**	**Description**	**ORIGINAL version**	**Illustr.**
TW SERIES				
TW 10 TW 15 TW 25	83957379	Lifting	**P019018S**	
TW 10 TW 15 TW 20	83913537	Lifting	**P019024S**	**N/A**
TW10 TW15 TW20 TW25 TW30 TW50	83924998 83917196	Steering	**P019030S**	

- An extensive product range of pumps, motors and interchangeable components.
- A long-term guarantee of 24 months.
- The best value for money on the market.

AGRICULTURAL TRACTOR PUMPS (CONT.)

FORD NEW HOLLAND

Type of tractor	OEM reference	Description	Rotation	Displ. (cm³)	HYDROKIT version	ORIGINAL version	Illustr.
35 SERIES							
4635 5635 7635	5149231 5162569 5167394 5167397 5180275 5180277	Steering	L	22		**P067002B**	
L SERIES							
L65 L75 L85 L95	5180271	Steering	L	14		**P067009B**	
TL SERIES							
TL70 TL80 TL90 TL100	5168841 5170560	Lifting	R	25	**P067001F**		
TL100	5180271	Steering	L	14		**P067009B**	
TM SERIES							
TM115 TM120 TM125 TM130 TM140	5129493 5169041 5179726	Lifting	R	19	**P067003F**	**P067003B**	
TN SERIES							
TN55 TN55D TN55S TN65 TN65D TN65F TN65S TN70 TN70D TN70F TN70S TN75 TN75D TN75F TN75S TN80F TN90F TN95F	5168841 5170560	Lifting	R	25	**P067001F**		
TN55 TN55D TN55S TN65 TN70 TN70D TN70F TN70S TN75 TN75F TN90F TN95F	5129493 5169041 5179726	Lifting	R	19	**P067003F**	**P067003B**	
TNA SERIES							
TN60DA TN70DA TN75DA	5129493 5169041 5179726	Lifting	R	19	**P067003F**	**P067003B**	
TND SERIES							
TN55D TN65D TN75D	5168841 5170560	Lifting	R	25	**P067001F**		
TNDA SERIES							
TN60DA TN70DA TN75DA	5129493 5169041 5179726	Lifting	R	19	**P067003F**	**P067003B**	
TNF SERIES							
TN65F TN75F TN80F TN90F TN95F	5168841 5170560	Lifting	R	25	**P067001F**		
TN65F TN80F TN95F	5129493 5169041 5179726	Lifting	R	19	**P067003F**	**P067003B**	

FORD NEW HOLLAND

Type of tractor	OEM reference	Description	Rotation	Displ. (cm³)	HYDROKIT version	ORIGINAL version	Illustr.
TNFA SERIES							
TN75FA TN85FA TN95FA	5168841 5170560	Lifting	R	25	**P067001F**		
TNS SERIES							
TN55S TN65S TN75S	5168841 5170560	Lifting	R	25	**P067001F**		
TN75S	5129493 5169041 5179726	Lifting	R	19	**P067003F**	**P067003B**	
TNSA SERIES							
TN60SA TN70SA TN75SA	5129493 5169041 5179726	Lifting	R	19	**P067003F**	**P067003B**	
TS SERIES							
TS90 TS100 TS110 TS115	82850804	Main				**P067011S**	**N/A**

HOLDER

Type of tractor	Description	Rotation	Displ. (cm³)	HYDROKIT version	ORIGINAL version	Illustr.
A55 A60	Lifting	L	17	**P018001F**	**P018001S**	
AG35	Lifting	L	8	**P018002F**		
A50 A65	Lifting	L	17	**P018003F**		
A40 A65 A55	Lifting	L	11	**P018004F**		
B19	Lifting	L	4		**P018005S**	
A30	Lifting	L	4		**P018006S**	
A65	Lifting	R	18		**P018008H**	

HURLIMANN

Type of tractor	OEM reference	Description	Rotation	Displ. (cm³)	HYDROKIT version	ORIGINAL version
H5110	N/A	Lifting	L	15	**P020001F**	
H6130	N/A	Lifting	L	17		**P020002S**
H6160	N/A	Lifting	L	19		**P020003S**
H478 H488	245297400	Lifting	R	17	**P020004F**	
H496 H5116 H6136 H6170	24529300020 245393300	Lifting	L	22	**P020005F**	
H468	N/A	Lifting	R	15		**P020006S**
H360 H466 H470	640R2050	Lifting	L	11		**P020007S**
H480	245292900	Steering	L	11		**P020011S**
6160	N/A	Lifting	L	22		**P020009S**
H470 H490	N/A	Steering	L	8	**P020008F**	
H470	245292900	Steering	L	11		**P020010S**
H496	245294200	Steering	R	11		**P020012S**
H480	N/A	Lifting	R	14		**P020013S**

Headquarters: +33 (0)2 51 34 10 10 / **UK:** +44 (0)1728 684 800

AGRICULTURAL TRACTOR PUMPS (CONT.)

ISEKI

- ISEKI tractors: contact us

JOHN DEERE

Type of tractor	OEM reference	Description	Rotation	Displ. (cm³)	HYDROKIT version	ORIGINAL version	Illustr.
303 505 3.10 5.10 6.10 7.10 9.10 8.20 9.20 10.20 7.30 9.30	AL10681 AL16301 AL37753	Lifting	L	8	**P024004F**	**P024001S**	
3.10 5.10 6.10 7.10 9.10 8.20 9.20 9.30 10.20	AT28460 AL15149	Lifting	L	11		**P024002S**	
510 710 8.20 10.20	AL16963 AL37752	Lifting	L	15		**P024003S**	
8.30	N/A	Lifting	L	11		**P024010S**	
4500	N/A	Lifting + Steering	L	41		**P024012S**	
3100 3200 3300 3400	RT7700036171 RT7700036351	Lifting + Steering	L	22.5 + 11		**P024013B**	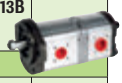
30 SERIES							
1030OU 1030VU 1130 1530 1630OU 1630VU 1830 2630 3030 4030 4230 4430 4630 830 (EU) 930 930VU	AR103035 AR103033 AR103036 AL70641 AR103035	Lifting + Steering cylindrical shaft version only	R	23		**P024014A**	
40 SERIES							
1040V 1140F 1140V 1640F 1840F 2040F 2240 2440 2640 2840 2940 3040 3340 3640 3640S 4040S 4240S 4640 4840 840 8440 940V	AR103035 AR103033 AR103036 AL70641 AR103035	Lifting + Steering cylindrical shaft version only		23		**P024014A**	

JOHN DEERE

Type of tractor	OEM reference	Description	Rotation	Displ. (cm³)	HYDROKIT version	ORIGINAL version	Illustr.
3010 SERIES							
3110 3210 (4039D) 3210 (4045D) 3210X (4039D) 3210X (4045D) 3310 (Powertech) 3310 (Std) 3310X (Powertech) 3310X (Std) 3410 (4039T) 3410 (4045T) 3410X (4039T) 3410X (4045T)	RT7700036171 RT7700036351	Lifting + Steering	L	22.5 + 11		**P024013B**	
50 SERIES							
1350 1550 1750 1750V 1850F 1850N 1850V 1950F 1950N 2150 2250F 2350 2450F 2550 2650 2650CS 2650F 2650N 2650TSS 2750 2950 3050 3650 4050 (6359T) 4050 (6466D) 4050E 4250 4350 4450 4650 4850 8450	RT7700036171 RT7700036351	Lifting + Steering	L	22.5 + 11		**P024013B**	

JOHN DEERE PUMPS, CONTINUED ... ON THE FOLLOWING PAGE

AGRICULTURAL TRACTOR PUMPS (CONT.)

JOHN DEERE

Type of tractor	OEM reference	Description	Rotation	Displ. (cm³)	HYDROKIT version	ORIGINAL version	Illustr.
5000 SERIES							
5200 5300 (EU) 5300 (USA) 5300N 5400 (EU) 5400 (USA) 5400N (EU) 5400N (USA) 5500 (EU) 5500 (USA) 5500N (EU) 5500N (USA)	RT7700036171 RT7700036351	Lifting + Steering	L	22.5 + 11		**P024013B**	
5003 SERIES							
5303 (EU) 5403 (EU) 5503 (EU)	RT7700036171 RT7700036351	Lifting + Steering	L	22.5 + 11		**P024013B**	
5004 SERIES							
5105	RT7700036171 RT7700036351	Lifting + Steering	L	22.5 + 11		**P024013B**	
5005 SERIES							
5205 5215 5215F 5215V 5315 5315F 5315V	RT7700036171 RT7700036351	Lifting + Steering	L	22.5 + 11		**P024013B**	
5010 SERIES							
5210 5310 (EU) 5310N (EU) 5410 (EU) 5410N 5510N (EU)	RT7700036171 RT7700036351	Lifting + Steering	L	22.5 + 11		**P024013B**	
5015 SERIES							
5515 5515F 5515HC 5515V 5615F 5615V	RT7700036171 RT7700036351	Lifting + Steering	L	22.5 + 11		**P024013B**	
5020 SERIES							
5220 5320 5320N 5420N 5520N	RT7700036171 RT7700036351	Lifting + Steering	L	22.5 + 11		**P024013B**	
5620 5720 5820	RE210000	Lifting	L	30		**P024015H**	**N/A**
8030 SERIES							
8430	AR103035 AR103033 AR103036 AL70641 AR103035	Lifting + Steering, cylindrical shaft version only	R	23		**P024014A**	

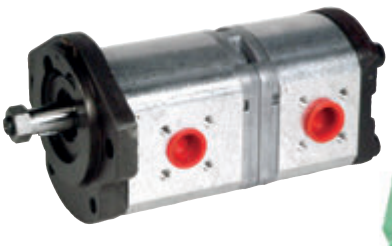

LAMBORGHINI

Type of tractor	OEM reference	Description	Rotation	Displ. (cm³)	HYDROKIT version	ORIGINAL version	Illustr.
350 503 603 704 A183 R235	245292800 640R2031	Lifting	R	8	**P028001F**	**P028001S**	
A 182 A184 470 503DT 583 653 654 683 684 754 784 854 904 955 955DT 1056 1156 1256 1356	640R2050 245291500 245293600	Steering	L	11		**P028002S**	
	245292700	Steering	L	8	**P028025F**	**P028025S**	
	24529390 24529430 24529430010 245294800	Lifting	L	11	**P028003F**		
	245293100 245291600	Lifting	L	14		**P028004S**	
1056 1156 1356 1206 1556 1706	245290160 245293300	Lifting	L	17	**P028006F**		
	245294000	Lifting	L	19	**P028013F**		
956 1106 1306 1506 1556 1706 1256 1356 6056	245294000 245293000 245393300 24529300020	Lifting	L	22	**P028008F**	**P028008B**	
674 774 874	245294700	Steering	L	8	**P028009F**		
774 874	245297400	Lifting	R	17	**P028011F**		
660 V		Lifting	L	8		**P028019S**	
R854 R955	245292900	Steering	L	11	**P028016F**		
674	245294400	Lifting	R	15	**P028010F**		
956 1106 1306 1506 1556 1706 1256 1356 6056	245294200	Steering	R	11	**P028012F**		
775 ORCHARD		Lifting	R	14		**P028031S**	
CRONO							
574.70	24524900	Lifting	R	19		**P028034S**	
FPLUS							
775 F PLUS	24524900	Lifting	R	19		**P028034S**	
190	245297600	Steering	R	16		**P028020S**	

AGRICULTURAL TRACTOR PUMPS (CONT.)

LAMBORGHINI

Type of tractor	OEM reference	Description	Rotation	Displ. (cm³)	HYDROKIT version	ORIGINAL version	Illustr.
FORMULA							
115	N/A	Steering	L	15		**P028035S**	
PREMIUM							
950 1050 1060	245297400	Lifting	R	17	**P028011F**		
	245297800 245396200 245396300	Lifting	R	22	**P028030F**		
1060	N/A	Steering	L	16		**P028039S**	
RACING							
165 190	245298300	Lifting	R	22	**P028029F**		
C 503	N/A	Lifting	L	6		**P028032S**	
R235 R804DT	N/A	N/A	L	8		**P028023S**	
A185 503	N/A	Steering	L	6		**P028026S**	
1356 340 LDT (1969)	N/A	N/A	R	8		**P028033S**	
503DTU 804	N/A	N/A	L	11		**P028040S**	
704 DT R704	N/A	N/A	L	6		**P028036S**	
950	N/A	Steering	L	11		**P028038S**	

LANDINI

Type of tractor	OEM reference	Description	Rotation	Displ. (cm³)	HYDROKIT version	ORIGINAL version	Illustr.
7000S 8000S	1824475M91	Lifting	R	14	**P030010F**	**P030010S**	
164 C 6000 C DT 7000	1824476M91	Lifting	L	14		**P030011S**	
30 SERIES							
4530V 5530V 5830 6030 6030V 6530 6830 7530 7830 8530 8830	1825210M91 1424599M91	Lifting + Steering	L	11	**P030001F**	**P030001S**	
5530F 5530L 6030F 6030L 6030V 6530F 6530L 6530V 6830 7530F 7530L 7830 8530F 8530L 8830	1825212M91	Lifting	R	11	**P030002F**	**P030002S**	
	1425495M92 3549614M91 3536739M91	Lifting	L	26		**P030006S**	

LANDINI

Type of tractor	OEM reference	Description	Rotation	Displ. (cm³)	HYDROKIT version	ORIGINAL version	Illustr.
40 SERIES							
5840 6040 6840	1825210M91 1424599M91	Lifting + Steering	L	11	**P030001F**	**P030001S**	
	1426471M91 1424599M91 1825210M91 3539858M91	Steering	L	11 + 8	**P030004F**	**P030004S**	
50 SERIES							
6550 7550 8550	1825210M91 1424599M91	Lifting + Steering	L	11	**P030001F**	**P030001S**	
6550 7550 8550	1825212M91	Lifting	R	11	**P030002F**	**P030002S**	
	1425495M92 3549614M91 3536739M91	Lifting	L	26		**P030006S**	
60 SERIES							
5860 6060 7860 7860HC 8860 8860HC	1825210M91 1424599M91	Lifting + Steering	L	11	**P030001F**	**P030001S**	
6860 7860 7860HC 8860 8860HC	1825212M91	Lifting	R	11	**P030002F**	**P030002S**	
6560F 6560L 6560V 6860 68CV 7560F 7560L 7860 7860HC 8560F 8560L 9060	3534941M91 3538957M91 3538958M92	Lifting	L	11	**P030007F**	**P030007S**	
5860 6060	3533910M91 3534387M91	Steering	R	11		**P030009S**	
6560F 6560L 6560V 7560F 7560L 8560F 8560L	3595190M91	Lifting + Steering	L	11 + 8	**P034007F**	**P034007S**	
60 NG SERIES							
5860 6860 7860 8860	1825210M91 1424599M91	Lifting + Steering	L	11	**P030001F**	**P030001S**	
6860 7860 8860	3534941M91 3538957M91 3538958M92	Lifting	L	11	**P030007F**	**P030007S**	
60 TIER2 SERIES							
6865 7860 8865	1825210M91	Lifting + Steering	L	11	**P030001F**	**P030001S**	

LANDINI PUMPS, CONTINUED ... ON THE FOLLOWING PAGE

AGRICULTURAL TRACTOR PUMPS (CONT.)

LANDINI

Type of tractor	OEM reference	Description	Rotation	Displ. (cm³)	HYDROKIT version	ORIGINAL version	Illustr.
6865 7860 8860 8865	3534941M91 3538957M91 3538958M92	Lifting	L	11	**P030007F**	**P030007S**	
5865	3661228M91		L	5 + 14		**P030025B**	**N/A**
70 SERIES							
5870 6070 6870 7870 78CV 8870	1825210M91	Lifting + Steering	L	11	**P030001F**	**P030001S**	
6870 7870 8870	1825212M91	Lifting	R	11	**P030002F**	**P030002S**	
6870 7870 8870	3534941M91 3538957M91 3538958M92	Lifting	L	11	**P030007F**	**P030007S**	
5870 6070	3533910M91 3534387M91	Steering	R	11		**P030009S**	
80 SERIES							
6880 6880VM 7880 7880VM 8880 8880HC 9080 9080HC 9880 9880HC	1825210M91 1424599M91	Lifting + Steering	L	11	**P030001F**	**P030001S**	
6880 6880VM 7880 7880VM 8880 8880HC 9080 9080HC 9880 9880HC	3534941M91 3538957M91 3538958M92	Lifting	L	11	**P030007F**	**P030007S**	
9080HC	3595190M91	Lifting + Steering	L	11 + 8	**P034007F**	**P034007S**	
500 SERIES							
5500 6500 7500 8500 9500	1825210M91 1424599M91	Lifting + Steering	L	11	**P030001F**	**P030001S**	
	1825212M91	Lifting	R	11	**P030002F**	**P030002S**	
	1425495M92 3549614M91 3536739M91	Lifting	L	26		**P030006S**	
ADVANTAGE SERIES							
65F 65FP 65GE 65GT 65GTP 65L 65LP 75F 75FP 75GE 75GT 75GTP 75L 75LP 85F 85FP 85GE 85GT 85GTP 85L 85LP L95GT	3534941M91 3538957M91 3538958M92	Lifting	L	11	**P030007F**	**P030007S**	
	3595190M91	Lifting + Steering	L	11 + 8	**P034007F**	**P034007S**	

LANDINI

Type of tractor	OEM reference	Description	Rotation	Displ. (cm³)	HYDROKIT version	ORIGINAL version	Illustr.
ATLANTIS SERIES							
70 75 80 85 90 100	3661228M91	Lifting + Steering	L	5 + 14		**P030025B**	**N/A**
ATLAS SERIES							
70 75 80 85 90 100	3661228M91	Lifting + Steering	L	5 + 14		**P030025B**	**N/A**
70 75 80 85 90	N/A	Lifting + Steering	L	8 + 11		**P030027B**	**N/A**
POWER FARM SERIES							
60 75 85 95 105	3661228M91	Lifting + Steering	L	5 + 14		**P030025B**	**N/A**
75 85 95 105	3652099M91 3652099M92	Lifting + Steering	L	8 + 14		**P030030B**	**N/A**
GLOBAL FARM SERIES							
90 95 100 105	3661228M91	Lifting + Steering	L	5 + 14		**P030025B**	**N/A**
BLIZZARD SERIES							
Blizzard 50 Blizzard 60 Blizzard 65 Blizzard 75 Blizzard 85 Blizzard 95	1825210M91 1424599M91	Lifting + Steering	L	11	**P030001F**	**P030001S**	
Blizzard 65 Blizzard 75 Blizzard 85 Blizzard 95	3534941M91 3538957M91 3538958M92	Lifting	L	11	**P030007F**	**P030007S**	
Blizzard 65 Blizzard 95	3538958M91	Lifting	L	14		**P030023S**	
GHIBLI SERIES							
80 85 90 95 100 105	3661228M91	Lifting + Steering	L	5 + 14		**P030025B**	**N/A**
GLOBUS SERIES							
Globus 65 Globus 75 Globus 80	3652099M91 3652099M92	Lifting + Steering	L	8 + 14		**P030030B**	**N/A**
CINGOLATI SERIES							
C4500 C4830 C5500 C5830 C6030F CF4830 CF5030 CF5830	1825210M91	Lifting + Steering	L	11	**P030001F**	**P030001S**	
C6500 C6830 C7800 C7830 C8860 CF6830	1825212M91	Lifting	R	11	**P030002F**	**P030002S**	
C7830 C8860	3301295M91 3549613M91	Lifting	L	22	**P030018F**		

AGRICULTURAL TRACTOR PUMPS (CONT.)

LANDINI

Type of tractor	OEM reference	Description	Rotation	Displ. (cm³)	HYDROKIT version	ORIGINAL version	Illustr.
LARGE SERIES							
10000 12500 13000 14500	1825210M91	Lifting + Steering	L	11	**P030001F**	**P030001S**	
10000 13000	3301295M91 3549613M91	Lifting	L	22	**P030018F**		
10000 10000S 12500 13000 14500	1425495M92 3549614M91 3536739M91	Lifting	L	26		**P030006S**	
16000 16500 16550 17500 19000 1950 L160 L180 L200	3038730M2 3790722M1	Auxiliary	L			**P034027K**	**N/A**
REX SERIES							
REX70L	3533911M91	Lifting	L	14		**P030020S**	
REX CAB SERIES							
Rex 70 Rex 80 Rex 90 Rex 100	3534941M91 3538957M91 3538958M92	Lifting	L	11	**P030007F**	**P030007S**	
	3595190M91	Lifting + Steering	L	11 + 8	**P034007S**	**P034007S**	
	3652099M91 3652099M92	Lifting + Steering	L	8 + 14		**P030030B**	**N/A**
LAND POWER SERIES							
125 130 135 145 160 165 185	3552261M93	Lifting + Steering	R	28 + 16		**P030019B**	
LEGEND SERIES							
105 115 130 145 165	3552261M93	Lifting + Steering	R	28 + 16		**P030019B**	
LEGEND NGTDI SERIES							
140 160	N/A	Lifting + Steering	R	36 + 16		**P030029B**	**N/A**
MYTHOS SERIES							
90 100 105 115	3652099M91 3652099M92	Lifting + Steering	L	8 + 14		**P030030B**	**N/A**
Rex FP/LP/GTP/GE SERIES							
Rex 90GE	1825210M91	Lifting + Steering	L	11	**P030001F**	**P030001S**	
Rex 100FP Rex 100GE Rex 100GTP Rex 70FP Rex 70GE Rex 70GTP Rex 70LP Rex 80FP Rex 80GE Rex 80GTP Rex 80LP Rex 90FP Rex 90GE Rex 90GTP	3534941M91 3538957M91 3538958M92	Lifting	L	11	**P030007F**	**P030007S**	
	3595190M91	Lifting + Steering	L	11 + 8	**P034007F**	**P034007S**	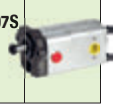

LANDINI

Type of tractor	OEM reference	Description	Rotation	Displ. (cm³)	HYDROKIT version	ORIGINAL version	Illustr.
REX F/GE/GT TIER2 SERIES							
105F 105GE 105GT 60F 60GE 70F 70GE 75F 75GE 75GT 80F 80GE 85F 85GE 85GT 90GT 95F 95GE 95GT	3652099M91 3652099M92	Lifting + Steering	L	8 + 14		**P030030B**	**N/A**
TREKKER SERIES							
CF70	3534941M91 3538957M91 3538958M92	Lifting	L	11	**P030007F**	**P030007S**	
C75 C85 C95 CF65 CF75 CF85	3595190M91	Lifting + Steering	L	11 + 8	**P034007F**	**P034007S**	
TREKKER NG SERIES							
70C 70F 70L 80C 80F 80L 90C 90F 90L 100C	3595190M91	Lifting + Steering	L	11 + 8	**P034007F**	**P034007S**	
TREKKER NG TIER2 SERIES							
75C 75F 75M 85C 85F 85M 95C 95F 95M 105C 105F 105M	3595190M91	Lifting + Steering	L	11 + 8	**P034007F**	**P034007S**	
VIGNETI SERIES							
Vigneti 65V Vigneti 75V	3534941M91 3538957M91 3538958M92	Lifting	L	11	**P030007F**	**P030007S**	
VIGNETI REX CAB TIER2 NG SERIES							
75V 80V 85V	3652099M91 3652099M92	Lifting + Steering	L	8 + 14		**P030030B**	**N/A**
VIGNETI FOOTSTEP SERIES							
55V 60V 65V 75V	3595190M91	Lifting + Steering	L	11 + 8	**P034007F**	**P034007S**	
VISION SERIES							
80 85 90 95 100 105	3652099M91 3652099M92	Lifting + Steering	L	8 + 14		**P030030B**	**N/A**

AGRICULTURAL TRACTOR PUMPS (CONT.)

LOISEAU

Type of tractor	Description	Rotation	Displ. (cm³)	HYDROKIT version	ORIGINAL version	Illustr.
L 35	Auxiliary	L	8		**P032002S**	
L 35	Auxiliary	L	11	**P032003F**		
L 35 640 D	Auxiliary	L	15	**P032004F**		
746 860 TYPE: 20868 780	Auxiliary	L	12 + 6		**P032005H**	
746 1780 3860 860 TYPE: 20868	Auxiliary	L	12 + 6		**P032007H**	
Loiseau fitting	Auxiliary	R	15 + 6		**P032010H**	
746	Auxiliary	L	15 + 6		**P032011H**	
700 782	Auxiliary	L	12 + 8		**P032012H**	**N/A**
LOISEAU HIGH-CLEARANCE TRACTOR	Auxiliary	L	12 + 8		**P032014H**	**N/A**
Loiseau 746	Auxiliary	L	15		**P032017H**	**N/A**

MASSEY FERGUSON

Type of tractor	OEM reference	Description	Rotation	Displ. (cm³)	HYDROKIT version	ORIGINAL version	Illustr.
100 SERIES							
134 154 154 V 154 F 164 V 164 F 164 S 174 174 S 184 194	3531220M91	Steering	L	11	**P034001F**	**P034001S**	
134C 134V 154 154C 154F 154S 154V 164TF 164TS 164TV 174 174C 174F 174S 174V 184 184F 184S 194 194C 194F 194S	1825210M91 3539858M91	Steering	L	11	**P034002F**	**P034002S**	
154F 154S 164TS 174F 174S 184F 184S 194F 194S	1824474M91 1823870M91 3539859M91	Lifting	L	19	**P034003F**		

MASSEY FERGUSON

Type of tractor	OEM reference	Description	Rotation	Displ. (cm³)	HYDROKIT version	ORIGINAL version	Illustr.
174F 184F 194F	3531220M91	Steering	L	8		**P034004S**	
	3597706M91 3597692M91 3774612M91 3595202M91 3701005M91	Lifting + Auxiliary	L	11 + 8	**P034007F**		
174 174C 174F 174S 174V 184 184F 184S 194 194C 194F 194S	1825212M91 3539857M91	Lifting	R	11	**P034005F**	**P034005S**	
154V 154F 164V 164F	3534941M91 3538957M91 3538958M92	Lifting	L	11	**P034006F**	**P034006S**	
158F 158S 158V	1664633M91 3600189M91	Steering	R	6		**P034020E**	
165 168 175 175S 178 185 188	1666726M94 1666727M92 3774649M91 1666726M92	Steering	L	6	**P034025F**	**P034025S**	
135 135V 148 152 152F 152S 152V 155 158 165 168 185 188	1663627M92 1686766M91 1869458M92 531607M93 886367M96	Auxiliary + PTO		13 + 7		**P034032E**	
135 148 152 152F 152S 152V 158 168 185 188	1686765M91	Auxiliary + PTO		13 + 7		**P034034E**	
133 135 140 145 145S 145V 148 152 152F 152S 152V 155 158 165 168 175 175S 178 185 188	886821M94	Multi Power		N/A		**P034035S**	

Headquarters: +33 (0)2 51 34 10 10 / **UK:** +44 (0)1728 684 800

AGRICULTURAL TRACTOR PUMPS (CONT.)

MASSEY FERGUSON							
Type of tractor	OEM reference	Description	Rotation	Displ. (cm³)	HYDROKIT version	ORIGINAL version	Illustr.
135 148 165 175 178	1684582M92 886682M97	N/A		N/A		**P034065W**	**N/A**
135 148	527904M93 773126M92	N/A	R	4.5		**P034050S**	**N/A**
135 140 145 148 152	N/A	Steering	R	6		**P034030E**	
	N/A	Steering	L	6		**P034031E**	
200 SERIES							
233 234 253 254 263 264 273 274 283 284 293 294	3531220M91	Steering	L	11	**P034001F**	**P034001S**	
233 234C 234CF 234S 254 254C 254CF 254S 264T 264TCF 264TS 273 274 274C 274CF 274S 274SK 283 284 284S 293 294 294C 294S	1825210M91 3539858M91	Steering	L	11	**P034002F**	**P034002S**	
274C	1824474M91 1823870M91 3539859M91	Lifting	L	19	**P034003F**		
273 274 274C 274CF 274S 274SK 283 284 284S 293 294 294C 294S	1825212M91 3539857M91	Lifting	R	11	**P034005F**	**P034005S**	
260	1664633M91 3600189M91	Steering	R	6		**P034020E**	**N/A**
265 275 285 290	1666726M94 1666727M92 3774649M91 1666726M92	Steering	L	6	**P034025F**	**P034025S**	
MF 240 MF 250	1695922M91 3772716M91 3774041M9 3774614M91	Steering	R	4.5		**P034028S**	

MASSEY FERGUSON							
Type of tractor	OEM reference	Description	Rotation	Displ. (cm³)	HYDROKIT version	ORIGINAL version	Illustr.
240 250 260 265 275 285 290 298	1663627M92 1686766M91 1869458M92 531607M93 886367M96	Auxiliary + PTO		13 + 7		**P034032E**	
240 250 260 265 275 285 290 298	1686765M91	Auxiliary + PTO		13 + 7		**P034034E**	
235 240 245 250 255 260 265 275 285 290	886821M94	Multi Power		N/A		**P034035S**	
230 240 250	527904M93 773126M92	N/A	R	4.5		**P034050S**	**N/A**
235 245 250 255	N/A	Steering	R	6		**P034030E**	
	N/A	Steering	L	6		**P034031E**	

MASSEY FERGUSON PUMPS, CONTINUED ... ON THE FOLLOWING PAGE

- An extensive product range of pumps, motors and interchangeable components.
- A long-term guarantee of 24 months.
- The best value for money on the market.

AGRICULTURAL TRACTOR PUMPS (CONT.)

MASSEY FERGUSON							
Type of tractor	OEM reference	Description	Rotation	Displ. (cm³)	HYDROKIT version	ORIGINAL version	Illustr.
300 SERIES							
333 353 363 373 377 383 387 393 397	3531220M91	Steering	L	11	**P034001F**	**P034001S**	
333 353 353LX 353S 363 373 373LX 373S 377 383 383LX 383S 387 393 393LX 393S 393TLX 397	1825210M91 3539858M91	Steering	L	11	**P034002F**	**P034002S**	
354 362 364 365 372N 374F 374S 375 382 384S 390 390T 394S 398	3531220M91	Steering	L	8		**P034004S**	
	3597706M91 3597692M91 3774612M91 3595202M91 3701005M91	Lifting + Auxiliary	L	11 + 8	**P034007F**		
373 373LX 373S 377 383 383LX 383S 387 393 393LX 393S 393TLX 397	1825212M91 3539857M91	Lifting	R	11	**P034005F**	**P034005S**	
367CF 373 374AP 374F 374FP 374S 374SP 374V 377 383 384F 384FP 384S 384SP 384V 387 393 394C 394F 394FP 394H 394S 394SP 397	3534941M91 3538957M91 3538958M92	Lifting	L	11	**P034006F**	**P034006S**	
	3533910M91	Lifting	R	11		**P034013S**	
398 399	3595383M91 3597420M91	Lifting + Steering	L	18 + 12.5		**P034016S**	**N/A**

MASSEY FERGUSON							
Type of tractor	OEM reference	Description	Rotation	Displ. (cm³)	HYDROKIT version	ORIGINAL version	Illustr.
375E 390E	1663627M92 1686766M91 1869458M92 531607M93 886367M96	Auxiliary + PTO		13 + 7		**P034032E**	
362 365 375 390	1696665M91 3774616M92	Steering		N/A		**P034069S**	**N/A**
396 399	3611854M91 3701006M91 3774613M91	Lifting + Steering	L	10 + 8		**P034049S**	**N/A**
500 SERIES							
510 592 595	1808294M92	Steering	R	6.5		**P034019E**	
560	1664633M91 3600189M91	Steering	R	6		**P034020E**	**N/A**
565 575 590	1666726M94 1666727M92 3774649M91 1666726M92	Steering	L	6	**P034025F**	**P034025S**	
550 560 565 575 590 595	1663627M92 1686766M91 1869458M92 531607M93 886367M96	Auxiliary + PTO		13 + 7		**P034032E**	
	1686765M91	Auxiliary + PTO		13 + 7		**P034034E**	
	886821M94	MULTI POWER		N/A		**P034035S**	
592 595	3033119M92 1686767M91	Auxiliary + PTO		13 + 7		**P034033E**	
550	527904M93 773126M92	N/A	R	4.5		**P034050S**	**N/A**
600 SERIES							
699	1808294M92	Steering	R	6.5		**P034019E**	
675 690	1666726M94 1666727M92 3774649M91 1666726M92	Steering	L	6	**P034025F**	**P034025S**	
	886821M94	Multi Power		N/A		**P034035S**	
690 699	1693261M91 3903271M91	Steering	L	11.4		**P034029S**	
675 690 698 699	1686765M91	Auxiliary + PTO		13 + 7		**P034034E**	

Headquarters: +33 (0)2 51 34 10 10 / **UK:** +44 (0)1728 684 800

AGRICULTURAL TRACTOR PUMPS (CONT.)

MASSEY FERGUSON

Type of tractor	OEM reference	Description	Rotation	Displ. (cm³)	HYDROKIT version	ORIGINAL version	Illustr.
1000 SERIES							
1007 1014 1024 1114 1134	1825210M91 3539858M91	Steering	L	11	**P034002F**	**P034002S**	
1007	3534941M91 3538957M91 3538958M92	Lifting	L	11	**P034006F**	**P034006S**	
1102 1132	N/A	Lifting	L	19		**P034008S**	
1114 1134	1425495M92 3536739M91 3549614M91	Lifting	L	26		**P034009S**	
	1426471M91	Steering	L	11	**P034010F**	**P034010S**	
1134	35313899M91 3310810M91	Lifting	L	14		**P034011S**	
1200 1250	1878255M92	Auxiliary + Steering	R	32		**P034012S**	
	886821M94	Multi Power		N/A		**P034035S**	
1080	1808294M92	Steering	R	6.5		**P034019E**	
1004 1200 1250	1686765M91	Auxiliary + PTO		13 + 7		**P034034E**	
1114 2nd assembly		Differential gearing	L	3.8		**P034040S**	**N/A**
1114: 1st assembly		Differential gearing	L	3.8		**P034041S**	**N/A**
1114		Differential gearing	L	11 + 8.5		**P034042S**	**N/A**
2600 SERIES							
2620 2625 2640 2645 2675 2680 2685	3038730M2 3790722M1	Lifting	L	N/A		**P034027K**	
2640 2645 2675 2680 2685	3038732M2 3790723M1 3903882M1	Main	L	N/A		**P034062W**	**N/A**
2700 SERIES							
2705 2720 2725	3038730M2 3790722M1	Lifting	L	N/A		**P034027K**	
2745 2775 2805	3038732M2 3790723M1 3903882M1	Main	L	N/A		**P034062W**	**N/A**
3000 SERIES							
3050 3060 3065 3070 3075 3080 3085 3090 3095	3382280M1	Lifting + Steering	L	19 + 11	**P034038F**	**P034038B**	
3100 SERIES							
3115 3120 3125 3140	3382280M1	Lifting + Steering	L	19 + 11	**P034038F**	**P034038B**	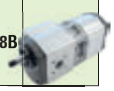

MASSEY FERGUSON

Type of tractor	OEM reference	Description	Rotation	Displ. (cm³)	HYDROKIT version	ORIGINAL version	Illustr.
3600 SERIES							
3630 3635 3645 3650 3655 3670 3680 3690	3038730M2 3790722M1	Lifting	L	N/A		**P034027K**	
	3038732M2 3790723M1 3903882M1	Main	L	N/A		**P034062W**	**N/A**
4200 SERIES							
4225 4225HV 4235 4240 4245 4255 4260 4265 4270	3800194M91 3816909M91	N/A	R	14 + 10	**P034044F**	**P034044B**	
4300 SERIES							
4325 4335 4345 4355 4360	3800194M91 3816909M91	N/A	R	14 + 10	**P034044F**	**P034044B**	
5400 SERIES							
5445 5455 5460 5465 5470 5475 5480	3797116M1 3797116M2	Lifting + Steering	L	19 + 14		**P034064B**	**N/A**
6100 SERIES							
6110 6120 6130 6140 6150 6160 6170 6180 6190	3382280M1	Lifting + Steering	L	19 + 11	**P034038F**	**P034038B**	
	3038732M2 3790723M1 3903882M1	Main	L	N/A		**P034062W**	**N/A**
6200 SERIES							
6235 6245 6255 6260 6265 6270 6280 6290	3382280M1	Lifting + Steering	L	19 + 11	**P034038F**	**P034038B**	
	3797116M1 3797116M2	Lifting + Steering	L	19 + 14		**P034064B**	**N/A**
6400 SERIES							
6445 6455 6460 6470 6475 6480 6485 6490 6495	3797116M1 3797116M2	Lifting + Steering	L	19 + 14		**P034064B**	**N/A**
8100 SERIES							
8110 8120 8130 8140 8150 8160	3038730M2 3790722M1	Lifting	L	N/A		**P034027K**	
	3038732M2 3790723M1 3903882M1	Main	L	N/A		**P034062W**	**N/A**
8000 SERIES							
SPECIFIC PPE PISTONS N/A							

AGRICULTURAL TRACTOR PUMPS (CONT.)

MERCEDES						
Type of tractor	Manufacturer reference	Description	Rotation	Displ. (cm³)	ORIGINAL version	Illustr.
MB 1000 MB 1300 MB 1500 MB 1600	0005537201	N/A	L	15	**P036001H**	**N/A**
MB 700 MB 800 MB 900	000553740 0005537401	N/A	R	15	**P036002H**	**N/A**
MB1000 MB1100 MB1300 MB1500	0005537101	N/A	R	12	**P036003H**	**N/A**

RENAULT							
Type of tractor	OEM reference	Description	Rotation	Displ. (cm³)	HYDROKIT version	ORIGINAL version	Illustr.
CLASSIC SERIES							
D 16 D22 D30 D35 N70 N71 N72 N73 Super 2D Super 3 Super 3D Super 4D Super 5 Super 5D Super 6 Super 6D Super 7 Super 7D N 73 N 77 R 77 V 73	0854577400 0854877400 6005020868	Lifting ASP 22X150 REF 16X150	R	9.5	**P040001F**		
			R	14		**P040036E**	
	0855946500 0855946599 6005020869 6005030954 7700035331	Lifting ASP 22X150 REF 18X150	R	9.5	**P040003F**		
	33854100	Lifting ASP 22X150 REF 16X150	L	9.5	**P040004F**		
		Lifting ASP 26X150 REF 18X150	L	9.5	**P040005F**		
R45 R50 R51 R53 R55 R56 R57 R60 R70 R80 R82 R86 R88 R89 R90 R91 R92 R94 R96 R98 32.50F 32.50V 32.60F 32.60SV 34.60V 42.70V 42.70F 44.70F 301 351 M 361 421 M 421 461 461 M 490 S 460 S 466 S 480 S 556 S 656 S	7700544581 6005020867 6005030951 7700035322 7700544580 7700568528 7701499131	Lifting	L	14	**P040010F**		
VINEYARD AND ORCHARD 32.50F 32.50V 32.60F 32.60SV 34.60V 42.70V 42.70F 44.70F	6005020867 6005030951 7700035322 7700544580 7700568528 7701499131	Lifting		16	**P040045F**		

Part numbers ending in:
F = Hydrokit PRODUCT
S = SAUER / PLESSEY
B = BOSCH
D = DOWTY / ULTRA
W = HAMWORTHY / DAVID BROWN
H = HPI
R = REXROTH
E = ENERFLUX / BENDIX
K = CASAPPA

RENAULT PUMPS, CONTINUED ... ON THE FOLLOWING PAGE

Headquarters: +33 (0)2 51 34 10 10 / **UK:** +44 (0)1728 684 800

AGRICULTURAL TRACTOR PUMPS (CONT.)

RENAULT

Type of tractor	OEM reference	Description	Rotation	Displ. (cm³)	HYDROKIT version	ORIGINAL version	Illustr.
94 421 461 462 466 461S 496.4 501.4 551 551S 551.4 556 556S 601.4 651 651.4 652 656 656S 681 681S 751 751S 752 782.4 781 851 891 921 951 951 981.4 981 1151 1151.4 1181.4	6005020874 7700013742 7700035327 7700563531 7700566099 7700568529 7700568530 7700706110	Lifting + Steering	L	14 + 8	**P040016F**		
	6005020874 7700013742 7700035327 7700563531 7700566099 7700568529 7700568530 7700706110	Lifting + Steering	L	18 + 8	**P040026F**		
700 M 704M 720M 724M 800M 804M 600M 650MI 750MI 754MI 850MI 854MI	6005020877 6005020879 6005020880 7700013007 7700020957 7700021767 7700028033 7700030851 7700034422 7700035337 7700035338 7700699878	Lifting + Steering	R	14 + 8	**P040017F**		
		Lifting + Steering	R	17 + 11	**P040020F**		
		Lifting + Steering	R	14 + 11	**P040021F**		
12 SERIES							
61 12 RS-RA 68 12 RS-RA 75 12 RS-RA 77 12TS 75 12TS 85 12TS 80 12TX 85 12TX 95 12 RSRE-RX-TS-TX 103 12RS-RE-RX-TSTX 113 12RS-RE-RX-TSTX	6005020877 6005020879 6005020880 7700013007 7700020957 7700021767 7700028033 7700030851 7700034422 7700035337 7700035338 7700699878	Lifting + Steering	R	14 + 8	**P040017F**		
		Lifting + Steering	R	17 + 11	**P040020F**		
		Lifting + Steering	R	14 + 11	**P040021F**		
58-12LS 65-12LS 70-12F 70-12LB 70-12SP 70-12V 75-12RA 75-12RS 75-12TS 80-12F 80-12SP 80-12TX 80-12V 85-12LS 85-12TS 85-12TX	6005020874 7700013742 7700035327 7700563531 7700566099 7700568529 7700568530 7700706110	Lifting + Steering	L	14 + 8	**P040016F**		
		Lifting + Steering	L	18 + 8	**P040026F**		

RENAULT

Type of tractor	OEM reference	Description	Rotation	Displ. (cm³)	HYDROKIT version	ORIGINAL version	Illustr.
70.12SP	7700021635 7700035340	Lifting + Steering	R	16 + 12	**P040024F**		
ORCHARD AND VINEYARD 50.12V 50.12LB 55.12V 55.12LB 70.12LB	6005030957	Lifting + Steering	L	14	**P040023F**		
14 SERIES							
61 14 RS-RA 68 14 RS-RA 75 14 RS-RA 77 14TS 75 14TS 85 14TS 80 14TX 85 14TX 95 14 RSRE-RX-TS-TX 103 14RS-RE-RX-TSTX 106 14 SP 113 14 TS-TXRE 110 14 120 14 133 14 145 14	6005020877 6005020879 6005020880 7700013007 7700020957 7700021767 7700028033 7700030851 7700034422 7700035337 7700035338 7700699878	Lifting + Steering	R	14 + 8	**P040017F**		
		Lifting + Steering	R	17 + 11	**P040020F**		
		Lifting + Steering	R	14 + 11	**P040021F**		
61-14RA 61-14RS 68-14RA 68-14RS 70-14F 70-14LB 70-14SP 70-14V 75-14LS 75-14RA 75-14RS 75-14TS 80-14F 80-14SP 80-14TX 80-14V 85-14LS 85-14TS 85-14TX	6005020874 7700013742 7700035327 7700563531 7700566099 7700568529 7700568530 7700706110	Lifting + Steering	L	14 + 8	**P040016F**		
	6005020874 7700013742 7700035327 7700563531 7700566099 7700568529 7700568530 7700706110	Lifting + Steering	L	18 + 8	**P040026F**		
70.14SP	7700021635 7700035340	Lifting + Steering	R	16 + 12	**P040024F**		
VINEYARD AND ORCHARD 55.14V 55.14LB 70.14LB	6005030957	Lifting	L	14	**P040023F**		
7014 V 7014 F 8014 F	6000103113	Version without trunnion bearing Lifting + Steering	L	14 + 11		**P040031S**	**N/A**
		Version with trunnion bearing Lifting + Steering	L	14 + 11		**P040047S**	**N/A**

RENAULT PUMPS, CONTINUED ... ON THE FOLLOWING PAGE

- An extensive product range of pumps, motors and interchangeable components.
- A long-term guarantee of 24 months.
- The best value for money on the market.

AGRICULTURAL TRACTOR PUMPS (CONT.)

RENAULT

Type of tractor	OEM reference	Description	Rotation	Displ. (cm³)	HYDROKIT version	ORIGINAL version	Illustr.
32 SERIES							
MODELS: MX ME MA MS 58 32 65 32 75 32 MODELS: TRACFOR 85 32 90 32 75 32 TX 85 32 TX 90 32 TX	6005020877 6005020879 6005020880 7700013007 7700020957 7700021767 7700028033 7700030851 7700034422 7700035337 7700035338 7700699878	Lifting + Steering	R	14 + 8	**P040017F**		
		Lifting + Steering	R	17 + 11	**P040020F**		
		Lifting + Steering	R	14 + 11	**P040021F**		
	7700022735 7700035275 7700034421	Lifting + Steering	L	19 + 11	**P040030F**	**P040030B**	
	6005020877 7700019142 7700021284 7700030854 7700035335 7700030943 6005030944	Lifting + Steering	L	17 + 11	**P040022F**		
MODELS PA PE PS PX 70.32 80.32P	7700021635 7700035340	Lifting + Steering	R	16 + 12	**P040024F**		
34 SERIES							
MODELS: M MX ME MA MS 58 34 65 34 75 34 MODELS: TRACFOR 85 34 90 34 MODELS: TX 75 34 85 34 90 34	6005020877 6005020879 6005020880 7700013007 7700020957 7700021767 7700028033 7700030851 7700034422 7700035337 7700035338 7700699878	Lifting + Steering	R	14 + 8	**P040017F**		
		Lifting + Steering	R	17 + 11	**P040020F**		
		Lifting + Steering	R	14 + 11	**P040021F**		
	6005030944	Lifting + Steering	L	19 + 11	**P040030F**	**P040030B**	
	6005020877 7700019142 7700021284 7700030854 7700035335 7700030943 6005030944	Lifting + Steering	L	17 + 11	**P040022F**		
MODELS PA PE PS PX 70.34 80.32P	7700021635 7700035340	Lifting + Steering	R	16 + 12	**P040024F**		
52 SERIES							
MODELS: TS-TX-TA-TE-ME-RE 103.52	6005020877 6005020879 6005020880 7700013007 7700020957 7700021767 7700028033 7700030851 7700034422 7700035337 7700035338 7700699878	Lifting + Steering	R	14 + 8	**P040017F**		
		Lifting + Steering	R	17 + 11	**P040020F**		
		Lifting + Steering	R	14 + 11	**P040021F**		
TRACTONIC TRACTOSHIFT BOX 103 52 TS TX TA TE	6005020877 7700019142 7700021284 7700030854 7700035335 7700030943 6005030944	Lifting + Steering	L	17 + 11	**P040022F**		
	6005030944	Lifting + Steering	L	19 + 11	**P040030F**	**P040030B**	

RENAULT

Type of tractor	OEM reference	Description	Rotation	Displ. (cm³)	HYDROKIT version	ORIGINAL version	Illustr.
54 SERIES							
MODELS: TS-TX-TA-TE-ME-RE 103.54 MODELS TRACFOR 106.54 106 54 TL TRACTONIC TRACTOSHIFT GEARBOX TS TX TZ TE TA 110.54 120.54 130.54 133.54 145.54 155.54	6005020877 6005020879 6005020880 7700013007 7700020957 7700021767 7700028033 7700030851 7700034422 7700035337 7700035338 7700699878	Lifting + Steering	R	14 + 8	**P040017F**		
		Lifting + Steering	R	17 + 11	**P040020F**		
		Lifting + Steering	R	14 + 11	**P040021F**		
TRACTONIC TRACTOSHIFT GEARBOX 106 54 103 54 TS TX TA TE MECHANICAL BOX 106 54 110 54 120 54 133 54 145 54 155 54	6005030944	Lifting + Steering	L	19 + 11	**P040030F**	**P040030B**	
103.54 106.54	6005020877 7700019142 7700021284 7700030854 7700035335 7700030943 6005030944	Lifting + Steering	L	17 + 11	**P040022F**		
TS TE TA TX TZ Series: TRACTOSHIFT GEARBOX 110.54 120.54 130.54 133.54 145.54 155.54	7700031856 7700033312	Lifting + Steering + Gearbox	R	17 + 11 + 8		**P040027S**	**N/A**
ARES							
Ares 0 Series Ares 540 Ares 550 Ares 610 Ares 620 Ares 630 Ares 640 Ares 6 Series: Ares 546 Ares 556 Ares 566 Ares 616 Ares 626 Ares 636 Ares 656 Ares 696 Ares 816 Ares 826 Ares 836 Ares 7 Series: Ares 547 Ares 557 Ares 567 Ares 577 Ares 617 Ares 657 Ares 697	6005029358	Lifting + Steering	L	19 + 11		**P040037B**	

AGRICULTURAL TRACTOR PUMPS (CONT.)

RENAULT

Type of tractor	OEM reference	Description	Rotation	Displ. (cm³)	HYDROKIT version	ORIGINAL version	Illustr.
CELTIS							
Hydraulic shuttle 426 436 446 456	7700062603	Lifting + Steering	L	28 + 22		**P040041W**	
CERES							
GEARBOX WITHOUT TWINSHIFT Ceres 65 Ceres 75 Ceres 85 Ceres 95 Mechanical shuttle version Ceres 310 Ceres 320 Ceres 330 Ceres 340	7700036171 7700036351	Lifting + Steering	L	22.5 + 11		**P040029B**	
GEARBOX WITHOUT TWINSHIFT CERES 65 CERES 95		Lifting + Steering	R	17 + 11	**P040020F**		
325 335 345 355	7700057296	Lifting + Steering	L	22 + 22		**P040039B**	
Hydraulic shuttle version 310 320 325 330 340	7700054245	Lifting + Steering	L	22 + 22		**P040043S**	
CERGOS							
330 340 350	7700036171 7700036351	Lifting + Steering	L	22.5 + 11		**P040029B**	
With hydraulic clutch 335 345 355	7700057296	Lifting + Steering	L	22 + 22		**P040039B**	
335 345 355	7700054245	Lifting + Steering	L	22 + 22		**P040043S**	
DIONIS							
110 120 130 140	6005030957	Lifting	L	14	**P040023F**		
130 140	6000103113	Version without trunnion bearing Lifting + Steering	L	14 + 11		**P040031S**	**N/A**
		Version with trunnion bearing Lifting + Steering	L	14 + 11		**P040047S**	**N/A**
ERGOS							
JOHN DEERE ENGINE 85 95 105	7700036171 7700036351	Lifting + Steering	L	22.5 + 11		**P040029B**	
436 446	0011134040 7700062602 0010527211		L	28 + 11		**P040038S**	

RENAULT

Type of tractor	OEM reference	Description	Rotation	Displ. (cm³)	HYDROKIT version	ORIGINAL version	Illustr.
90 100 110	7700057296	Lifting + Steering	L	22 + 22		**P040039B**	
MECHANICAL CLUTCH 90 100 110	7700054245	Lifting + Steering	L	22 + 11		**P040043S**	
FRUCTUS							
110 120 130 140	6005030957	Lifting	L	14	**P040023F**		
130	6000103113	Version without trunnion bearing Lifting + Steering	L	14 + 11		**P040031S**	**N/A**
		Version with trunnion bearing Lifting + Steering	L	14 + 11		**P040047S**	**N/A**
PALES							
210 230 240	6005030957	Lifting	L	14	**P040023F**		
TEMIS							
550X T	7700057296	Lifting + Steering	L	22 + 22		**P040039B**	
550X DM	7700054245	Lifting + Steering	L	22 + 11		**P040042W**	
610 630 650	7700056045	Lifting + Steering	L	14 + 14		**P040040B**	**N/A**

AGRICULTURAL TRACTOR PUMPS (CONT.)

SAME							
Type of tractor	**OEM reference**	**Description**	**Rotation**	**Displ. (cm³)**	**HYDROKIT version**	**ORIGINAL version**	**Illustr.**
Trident Condor 55SYN Taurus 60EXP Minitaurus 60 Mercury 85EXP Jaguar 95 CONDOR 55	245292700 24529270010	Steering	L	8	**P042001AF**		
ANTARES							
Antares 110 II Antares 130 II	245297800 245396200 245396300	Lifting	R	22	**P042031F**		
	245297800 245396200 245396300	Lifting	R	22	**P042018F**	**P042018S**	
100 110 130	245297400	Lifting	R	17	**P042017F**	**P042017S**	
100 110 110 II 130 130II	245299200 245393100 245397900 245399200 24599200	Steering	L	17		**P042023S**	
ASTER							
60 70	245297600	Lifting + Steering	R	16	**P042003F**	**P042003S**	
	245293700	Steering	R	17	**P042020F**	**P042020B**	
110	N/A	Steering	L	14		**P042021S**	
AURORA							
45	245292500	Steering	L	6	**P042007S**		
	245292600	Lifting	L	11	**P042008S**		
BUFFALO							
130	245292700 24529270010	Steering	L	8	**P042001AF**		
	245292900	Steering	L	11	**P042001F**		
	245294200	Steering	R	11	**P042004F**		
	245294000 245394100	Auxiliary	L	19	**P042011F**		
	24529300020 245393300	Lifting	L	22	**P042019F**	**P042019B**	
	N/A	Steering	L	8		**P042027S**	
CENTAURO							
70 EXP	245292700 24529270010	Steering	L	8	**P042001AF**		
70 EXP 70SP	245292900	Steering	L	11	**P042001F**		
	245293900 24529430010 245394300	Lifting	L	17	**P042010F**		
	N/A	Steering	L	8		**P042027S**	
70 SPECIAL	245294200	Steering	R	11	**P042004F**		

SAME							
Type of tractor	**OEM reference**	**Description**	**Rotation**	**Displ. (cm³)**	**HYDROKIT version**	**ORIGINAL version**	**Illustr.**
CENTURION							
Centauro 70EX Centurion 75EX	245292700 24529270010	Steering	L	8	**P042001AF**		
75EXP 75SP	245292900	Steering	L	11	**P042001F**		
	245293900 24529430010 245394300	Lifting	L	17	**P042010F**		
	245294000 245394100	Auxiliary	L	19	**P042011F**		
	245294200	Steering	R	11	**P042004F**		
	N/A	Steering	L	8		**P042027S**	
DELFINO							
32 35	245292500	Steering	L	6	**P042007S**		
	245292600	Lifting	L	11	**P042008S**		
DORADO							
Dorado 55 Dorado 60 Dorado 65 Dorado 70 Dorado 75 Dorado 85	245390900	Lifting	L	19		**P042029S**	
EXPLORER							
55 60 65 70 75 80 90 70SP 80SP 90SP	245297800 245396200 245396300	Lifting	R	22	**P042031F**		
55 60 65 70 75 80 90	245294700 24529470010	Steering	L	8	**P042006F**		
	245297400	Lifting	R	17	**P042017F**	**P042017S**	
55 60 65 70 75 80	24529440010	Lifting	R	15	**P042016F**	**P042016S**	
60 70SP 80SP 90SP	245297800 245396200 245396300	Lifting	R	22	**P042018F**	**P042018S**	
EXPLORER II							
Explorer 60 II Explorer 70 II Explorer 80 II Explorer 90 II	245297800 245396200 245396300	Lifting	R	22	**P042031F**		
	245297800 245396200 245396300	Lifting	R	22	**P042018F**	**P042018S**	
Explorer 80 II Explorer 90 II	245297400	Lifting	R	17	**P042017F**	**P042017S**	
EXPLORER II SP							
Explorer 60SP II Explorer 70SP II	245297800 245396200 245396300	Lifting	R	22	**P042031F**		
	245297800 245396200 245396300	Lifting	R	22	**P042018F**	**P042018S**	

Headquarters: +33 (0)2 51 34 10 10 / **UK:** +44 (0)1728 684 800

AGRICULTURAL TRACTOR PUMPS (CONT.)

SAME

Type of tractor	OEM reference	Description	Rotation	Displ. (cm³)	HYDROKIT version	ORIGINAL version	Illustr.
FRUTTETO							
60 75 85	245297600	Lifting + Steering	R	16	**P042003F**	**P042003S**	
	N/A	Steering	L	8	**P042025S**		
GALAXY							
170	245294200	Steering	R	11	**P042004F**		
	24529300020 245393300	Lifting	L	22	**P042019F**	**P042019B**	
HERCULES							
130	245292700 24529270010	Steering	L	8	**P042001AF**		
160 160EXP	245294000 245394100	Auxiliary	L	19	**P042011F**		
160	24529300020 245393300	Lifting	L	22	**P042019F**	**P042019B**	
LASER							
Laser 90 Laser 100 Laser 110 Laser 130 Laser 150	245294200	Steering	R	11	**P042004F**		
Laser 90 Laser 100 Laser 110 Laser 130	24529300020 245393300	Lifting	L	22	**P042019F**	**P042019B**	
LEOPARD							
Leopard 85EX Leopard 85	245292700 24529270010	Steering	L	8	**P042001AF**		
75C 85EXP 90 90DT	245292900	Steering	L	11	**P042001F**		
	245293900 24529430010 245394300	Lifting	L	17	**P042010F**		
	245294000 245394100	Auxiliary	L	19	**P042011F**		
	N/A		L	8		**P042027S**	
90	245294200	Steering	R	11	**P042004F**		
	24529300020 245393300	Lifting	L	22	**P042019F**	**P042019B**	
RANGER							
45	245292500	Steering	L	6	**P042007S**		
	245292600	Lifting	L	11	**P042008S**		
RUBIN							
120 135 150	245293900 24529430010 245394300	Lifting	L	17	**P042010F**		

SAME

Type of tractor	OEM reference	Description	Rotation	Displ. (cm³)	HYDROKIT version	ORIGINAL version	Illustr.
SILVER							
Silver 80 Silver 90 Silver 100.4 Silver 100.6 Silver 110 Silver 130	245297800 245396200 245396300	Lifting	R	22	**P042031F**		
	245297800 245396200 245396300	Lifting	R	22	**P042018F**	**P042018S**	
	245299200 245393100 245397900 245399200 24599200	Steering	L	17		**P042023S**	
Silver 80 Silver 90 Silver 100.4 Silver 100.6	245297400	Lifting	R	17	**P042017F**	**P042017S**	
TIGER							
100	245292700 24529270010	Steering	L	8	**P042001AF**		
100 SIX105	245292900	Steering	L	11	**P042001F**		
	245294000 245394100	Auxiliary	L	19	**P042011F**		
	N/A	Steering	L	8		**P042027S**	
SIX105	24529300020 245393300	Lifting	L	22	**P042019F**	**P042019B**	
100		Steering	L	8		**P042022S**	
TITAN							
160 190	245293900 24529430010 245394300	Lifting	L	17	**P042010F**		
145 160 190	245294000 245394100	Auxiliary	L	19	**P042011F**		
	24529830020	Lifting	R	22	**P042026F**	**P042026S**	
	24539670010	Lifting + Steering	R	16 + 16		**P042035B**	**N/A**
ARGON 60	N/A	Steering	R	19		**P042032S**	
TRIDENT							
130	245294300	Steering	L	11	**P042005F**		
	245293900 24529430010 245394300	Lifting	L	17	**P042010F**		
VINEYARD SERIES							
35 45 60	245292500	Steering	L	6	**P042007S**		
	245292600	Lifting	L	11	**P042008S**		

Part numbers ending in:

F = Hydrokit PRODUCT
S = SAUER / PLESSEY
B = BOSCH
D = DOWTY / ULTRA
W = HAMWORTHY / DAVID BROWN
H = HPI
R = REXROTH
E = ENERFLUX / BENDIX
K = CASAPPA

AGRICULTURAL TRACTOR PUMPS (CONT.)

STEYR							
Type of tractor	OEM reference	Description	Rotation	Displ. (cm³)	HYDROKIT version	ORIGINAL version	Illustr.
100 SERIES							
190	N/A	Lifting	L	11	**P045011F**		
110	406130004 406130024	Lifting	L	17	**P045012F**		
200 SERIES							
288 290	406130004 406130024	Lifting	L	17	**P045012F**		
400 SERIES							
450	406130004 406130024	Lifting	L	17	**P045012F**		
500 SERIES							
545/A 548/A	1986963C1	Steering	L	8		**P045001S**	
540 540A 545 545A 548 548A	N/A	Lifting	L	11	**P045011F**		
600 SERIES							
650 658 658/A	1986963C1	Steering	L	8		**P045001S**	
	406130004 406130024	Lifting	L	17	**P045012F**		
	N/A	Lifting	L	19		**P045023B**	
650 658	N/A	Lifting	L	16		**P045004S**	
	397750030	Lifting	R	19		**P045006B** **P045006S**	
	407130058	Lifting + Steering	L	16 + 8		**P045015B**	
	31100130011	Lifting	L	11		**P045007S**	
650H	31100130011	Lifting	L	11		**P045007S**	
	N/A	Lifting	L	16		**P045004S**	
700 SERIES							
750 760 768	1986963C1	Steering	L	8		**P045001S**	
	397750030	Lifting	R	19		**P045006B** **P045006S**	
	406130004 406130024	Lifting	L	17	**P045012F**		
	31100130011	Lifting	L	11		**P045007S**	
760A 768A	N/A	Lifting	L	16		**P045004S**	
750 760 760A 768 780	407130058	Lifting + Steering	L	16 + 8		**P045015B**	
750 760 760A	N/A	Lifting	L	19		**P045023B**	
760H 768H	31100130011	Lifting	L	11		**P045007S**	
	N/A	Lifting	L	16		**P045004S**	

STEYR							
Type of tractor	OEM reference	Description	Rotation	Displ. (cm³)	HYDROKIT version	ORIGINAL version	Illustr.
800 SERIES							
870	1986963C1	Steering	L	8		**P045001S**	
	406130004 406130024	Lifting	L	17	**P045012F**		
	407130058	Lifting + Steering	L	16 + 8		**P045015B**	
	N/A	Lifting	L	19		**P045023B**	
	31100130011	Lifting	L	11		**P045007S**	
870A	N/A	Lifting	L	16		**P045004S**	
870 870A	397750030	Lifting	R	19		**P045006B** **P045006S**	
870H	31100130011	Lifting	L	11		**P045007S**	
	N/A	Lifting	L	16		**P045004S**	
900 SERIES							
988	1986963C1	Steering	L	8		**P045001S**	
	406130004 406130024	Lifting	L	17	**P045012F**		
	407130058	Lifting + Steering	L	16 + 8		**P045015B**	
	N/A	Lifting	L	19		**P045023B**	
	31100130011	Lifting	L	11		**P045007S**	
980A 988	N/A	Lifting	L	16		**P045004S**	
975 TURBO	N/A	Lifting	L	5	**P045017F**		
955 964 970	01176000 155700750003	Lifting + Steering	L	16 + 11	**P045018F**	**P045018B**	
980H	31100130011	Lifting	L	11		**P045007S**	
	N/A	Lifting	L	16		**P045004S**	
1000 SERIES							
1090 1100 1108 1200 1400	61100130021	Lifting	L	14		**P045003S**	
	N/A	Lifting	L	16		**P045004S**	
	397750030	Lifting	R	17		**P045005S**	
1090 1090A 1100 1100A 1108 1108A 1200 1400 1400A	N/A	Lifting	L	19		**P045023B**	

Headquarters: +33 (0)2 51 34 10 10 / **UK:** +44 (0)1728 684 800

AGRICULTURAL TRACTOR PUMPS (CONT.)

STEYR

Type of tractor	OEM reference	Description	Rotation	Displ. (cm³)	HYDROKIT version	ORIGINAL version	Illustr.
2000 SERIES							
2036	61100130021	Lifting	L	14		**P045003S**	
	N/A	Lifting	L	16		**P045004S**	
	397750030	Lifting	R	17		**P045005S**	
	N/A	Lifting	L	19		**P045023B**	
3000 SERIES							
3875	61100130021	Lifting	L	14		**P045003S**	
	N/A	Lifting	L	16		**P045004S**	
	397750030	Lifting	R	17		**P045005S**	
	N/A	Lifting	L	19		**P045023B**	
8000 SERIES							
8055	1986963C1	Steering	L	8		**P045001S**	
8050 8055 8060 8070 8075 8080 8090	61100130019	Steering	L	11		**P045002S**	
	61100130021	Lifting	L	14		**P045003S**	
	N/A	Lifting	L	16		**P045004S**	
	407130058	Lifting + Steering	L	16 + 8		**P045015B**	
8050L 8055L 8070L 8075L 8080L 8080TD	61100130021	Lifting	L	14		**P045003S**	
	N/A	Lifting	L	16		**P045004S**	
8050 8050A 8060 8060A 8070 8075 8080 8090	31100130011	Lifting	L	11		**P045007S**	
8050L 8055L 8070L 8080L 8100L 8120L	61100130019	Steering	L	11		**P045002S**	
8050 8055 8060 8060 TURBO 8060 A TURBO 8060AS TURBO 8070 8070A 8075 8080 8080TD 8090 8090TD	N/A	Lifting	L	19		**P045023B**	
8050 8050A 8060 8060A 8070 8075 8080 8090	31100130011	Lifting	L	11		**P045007S**	
8050L 8055L 8070L 8080L 8100L 8120L	61100130019	Steering	L	11		**P045002S**	

STEYR

Type of tractor	OEM reference	Description	Rotation	Displ. (cm³)	HYDROKIT version	ORIGINAL version	Illustr.
8050 8055 8060 8060 TURBO 8060 A TURBO 8060AS TURBO 8070 8070A 8075 8080 8080TD 8090 8090TD	N/A	Lifting	L	19		**P045023B**	
8055 8055A 8060 TURBO 8060 A TURBO	132515005	Lifting	R	33		**P045026B**	
8100 SERIES							
8100 8120 8130 8140 8160 8170	61100130019	Steering	L	11		**P045002S**	
	61100130021	Lifting	L	14		**P045003S**	
	31100130011	Lifting	L	11		**P045007S**	
	407130058	Lifting + Steering	L	16 + 8		**P045015B**	
8100 8100L 8110A 8120 A TURBO 8120L 8120L 8130 TURBO 8140 8150 8160 8170	61100130021	Lifting	L	14		**P045003S**	
	N/A	Lifting	L	16		**P045004S**	
8140S 8160S	397750030	Lifting	R	17		**P045005S**	
8075 8090	31100130013 31100130019	N/A	L	11		**P045016S** **P045016B**	
8100 8100A 8120 8120 TURBO 8120 A TURBO 8130 8140 8140A 8150 8160 8170	N/A	Lifting	L	19		**P045023B**	
9000 SERIES							
9090	61100130019	Steering	L	11		**P045002S**	
	61100130021	Lifting	L	14		**P045003S**	
	N/A	Lifting	L	16		**P045004S**	
	31100130011	Lifting	L	11		**P045007S**	
	407130058	Lifting + Steering	L	16 + 8		**P045015B**	
	N/A	Lifting	L	19		**P045023B**	
9078 9086 9094 9083	01176000 155700750003	Lifting + Steering	L	16 + 11	**P045018F**	**P045018B**	
9100 SERIES							
9105 9115 9125 9145	132515005	Lifting	R	33		**P045026B**	
M SERIES							
M9078 M9083 M9086 M9094	01176000 155700750003	Lifting + Steering	L	16 + 11	**P045018F**	**P045018B**	
T SERIES							
T185 T280A	313T130010	N/A	R	11		**P045022S**	

AGRICULTURAL TRACTOR PUMPS (CONT.)

VALTRA						
Type of tractor	OEM reference	Description	Rotation	Displ. (cm³)	ORIGINAL version	Illustr.
505 605 705 805 905	30225120	Lifting + Steering	R	17 + 22	**P052002D**	**N/A**
205 305 405 365 465 565 665	32905600 731310	Lifting + Steering	L	12 + 10	**P052006S**	**N/A**
205 305 405 365 465 565 665	31851700 33000132220 731320	Lifting + Steering	L	11 + 11	**P052011B**	**N/A**
SERIES 100 800 900	31851700 33000132220 731320	Lifting + Steering	L	11 + 11	**P052011B**	**N/A**
505 605 705 805 905 655 755 855	30225110	Lifting + Steering	R	11 + 23	**P052013W**	**N/A**
6000 SERIES						
6000 6100 6200 6200LS 6300 6300LS 6400 6400LS 6600 6600E 6800 6800E 6900	31852330	Lifting + Steering	L	25 + 8.3	**P052003B**	
6000 6100 6200 6300 6400 6600 6800 6900	31852310 34306100	Lifting + Steering	L	23 + 6	**P052004S**	
8000 SERIES						
8300 8600 8800	F30387302	Lifting	L	44	**P052001K**	
8000 8000LS 8050 8050LS 8050E 8100 8100LS 8100E 8150 8150LS 8150E 8200 8200E 8400 8400E 8450 8450E 8550 8550E 8750 8750E	31852330 33564400	Lifting + Steering	L	25 + 8.3	**P052003B**	

VALTRA						
Type of tractor	OEM reference	Description	Rotation	Displ. (cm³)	ORIGINAL version	Illustr.
8000 8050 8100 8150 8200 8400 8450 8550 8750	31852310 34306100	Lifting + Steering	L	23 + 6	**P052004S**	
6000 HIGH TECH SERIES						
6250HI 6350HI 6550HI 6650HI 6750HI 6850HI	33664100 35108100	Lifting + Steering	L	32 + 11	**P052012B**	**N/A**
8000 HIGH TECH SERIES						
8050HI 8150HI 8350HI 8450HI 8550HI 8950HI	33664100 35108100	Lifting + Steering	L	32 + 11	**P052012B**	**N/A**

ZETOR						
Type of tractor	OEM reference	Description	Rotation	Displ. (cm³)	HYDROKIT version	ORIGINAL version
ZETOR Less than 80 hp up to 1992 47.18 50.11 52.11 55.11 57.11 59.11 67.11 70.11 77.11 72.11 77.11 52.45 62.45 72.45 77.45	70114610 70114601					**P050001A**
72 SERIES	N/A		L	16		**P050002S** **P050002H**
7745	10944614		L	19	**P050003F**	**P050003S**
5511	N/A		L	8		**P050004S**
86.41 96.41 116.41	53420911	Lifting				**P050010A**
95.40	7840901 9408228					**P050011W**
385DT	55113952 70118300 70118320					**P050012W**
5320	A72454140 18229485DL					**P050013W**

Headquarters: +33 (0)2 51 34 10 10 / **UK:** +44 (0)1728 684 800

PUMPS FOR HEDGECUTTERS

VARIOUS HEDGECUTTERS		
Machine make	**Description**	**ORIGINAL version**
Rousseau	Kit - multiplier + sleeve	**MMDR1**
Mc Connel	Kit - multiplier + sleeve	**MMDR2**
Sleeve for P158001S	Kit - multiplier + sleeve	**PA15800006**

BERRY					
Type of hedgecutter	**OEM reference**	**Rotation**	**Displ. (cm³)**	**HYDROKIT version**	**ORIGINAL version**
A 420 SNI B480 SH A380		R	44 + 6		**P062002S**
B430		R	40 + 6		**P062003H**
1981 SERIES		R	50 + 8		**P062006H**
R501AV		R	43 + 11		**P062009K**
A420 SNI B 480 SH		B	33.5		**M062004S**

CMV					
Type of hedgecutter	**OEM reference**	**Rotation**	**Displ. (cm³)**	**HYDROKIT version**	**ORIGINAL version**
CMV100	PRN63+11 D C043 SNP3.63D C043	R	63 + 11		**P064003S**
450 GP					**P064005D**
CMV100		B	30		**M064001H**
CMV40	MC3F181D159 97374				**M064002O**
CMV 100 CMV R91	DENISSON M4SCVS31WN00A104 replaced by M4SCVS31WN00A504		Vane motor 31 cm3		**M064004O**

BOMFORD TURNER					
Type of hedgecutter	**OEM reference**	**Rotation**	**Displ. (cm³)**	**HYDROKIT version**	**ORIGINAL version**
GT 435 GT 450 GT 465 GT 468 Super Trim Hedge mower 4.50 Tornado B498 1929N B377 GT 375 2204M 3592 P Mirage 1929N	05.650.002 02.865.46	R	46		 **P146001D**
GT 375 GT 465	06.415.01	L	8		 **P146002D**
GT 455 B 498 GT plus Tornado B48XRH	06.415.01	L	10		**P146003H** **P146003S**
Hedge mower 4.50 GT375	0400217	L	8		**P146004D**
TURNER	3021082	R	45 + 9		 **P146009D**
65 MX B53X		R	45		**P146010D**
GT 49T GT 58T GT 70T 54 Assembly 97					**P146011D**
GT 580		L	77		**P146012D**

BOMFORD TURNER					
Type of hedgecutter	**OEM reference**	**Rotation**	**Displ. (cm³)**	**HYDROKIT version**	**ORIGINAL version**
TURNER			77		**P146015D**
B49 GT468	4190402 0953702 0953722	L	11		**P146016S**
5333 8181	953703				**P146021D**
G55					**P146023D**
GT49 GT64		R			**P146024W**
B54X GT427	4608201 0565003	R			**P146025W**
GT56		L	10		**P146026W**
B 588 RH * 468 (Ref on rotor 1108MW) Tornado	02865.46	B	31		 **M146005W**
GT 470 (82-83) Concorde GT 450 GT 455 GT 468 Super trim	02.865.37 02.865.01 0286541	B	24		 **M146006W**
XM 80 B48XRH	286559	B	41		 **M146007W**
Concorde GT375 GT435 GT450 GT447RH 447 950 Faucon	02 865 42 02.865.26	B	24		 **M146008W**
GT 470		B	24		**M146013K**
TURNER		B	40		**M146015K**
B58T GT49 Rotor ref: ISPM	977304	B	44		**M146019D**
TAIL'NET HEDGE MOWER					 **M146024D**
Bomfort B468			0977306 0977305		

PUMPS FOR HEDGECUTTERS (CONT.)

Mc CONNEL

Type of hedgecutter	OEM reference	Rotation	Displ. (cm³)	HYDROKIT version	ORIGINAL version
PA33 PA44		R	46		**P142001D**
P10 DYNACUT		R	45		**P142002D** **P142002S**
P33 PA33 PA44 DYNACUT PA55	8201480	R	45 + 9		**P142003D**
PA93 PA94 PA 92 PA23 PA24 MAG450E MAG460	80134444 8201466	R	33 + 6		**P142005D** **P142005S**
PA37 PA95 PA96 PA97		R	45 + 8		 **P142006S**
PA25		R	33		**P142007S**
PA44		L	DOUBLE		**P142008D**
PA91 PA92 PA93		R	33 + 6		**P142011S**
2050T 2070 MAG480 MAG500	8201685 8201700	R	44 + 6		 **P142014D**
Panthere		R	48 + 12		**P142020S**
POLYVERT 2012 POLYVERT 2013		R	53 + 6		**P142022S**
PA2060		R	43 + 8		**P142024K**
PA97 433-434		R	48 + 14		**P142032S**
PA93	Secondary	R	6.3		**P142034K**
POLYVERT 2015E		R	63 + 17		**P142035S**
P33 Polymark ARM	8301014	B	33		 **M142004D**
PA92 PA93 PA94		B	28		 **M142008K**
PA2070/868P PA2080 AGRAM 460 PA33 PA55 PA37 PA97	8301271	B	38		 **M142009K**
PA91 ORSI CR450		B	21		**M142010K**  **M142010S**
Phanther 3 SPAN		B	36		**M142012O**

Mc CONNEL

Type of hedgecutter	OEM reference	Rotation	Displ. (cm³)	HYDROKIT version	ORIGINAL version
MAG 500 MAG500E MAG 480 POLYVERT 2013E POLYVERT 2018 TWOSE PA 96 2070	8301273	B	41		 **M142013W**
PA33		B	38		**M142016K**
PA93					**M142017M**
PA33 PA55 PA37 PA97		B	24		**M142019O**
500E		B	41		**M142021D**
12HR84					**M142022D**
MAG 450S					**M142024D**
AGRAM 460 ARGOS 500		L	27		**M142026K**
MAG 7000T	8301290				**M142029N**
PANTHERE					**M142030A**

NICOLAS

Type of hedgecutter	OEM reference	Rotation	Displ. (cm³)	HYDROKIT version	ORIGINAL version
460 N460 4600 4700 5400		R	50 + 6		 **P156001H**
Hedge mower 3800 4004		R	40 + 6		 **P156002H**
360TI 425		R	34 + 6		**P156003S**
Rubis Origine Opale		R	40 + 10		 **P156004H**
PRUNER 360 TI 425		R	31 + 6		 **P156005H**
4300 Model 92		B	20		 **M156005H**
4400 4600 TI OPALE		B	25		 **M156006H**
4600 TI		B	31		 **M156007H**
360 TI pruner 425 360T		R	20		**M158008S**

Headquarters: +33 (0)2 51 34 10 10 / **UK:** +44 (0)1728 684 800

PUMPS FOR HEDGECUTTERS (CONT.)

ROUSSEAU					
Type of hedgecutter	OEM reference	Rotation	Displ. (cm³)	HYDROKIT version	ORIGINAL version
420 SE 451 SE 470 SE 471 SE 471 SP 480 SP Argo 48 Castor 42	SAUER pump 270038 REXROTH pump: 270039 270030	R	44 + 6		**P158001S**
	SAUER secondary	R	6		**P158021S**
	SAUER primary	R	44		**P158023S**
	Double pump + multiplier				**P158029S**
420 SE and the entire series 44 mounted on 18-mm cyl. shaft 480 PRO 420SP		R	44 + 6		**P158002S**
451SP 451 S 500 SL 500 SP 572 SP/ TP	270058 2700120 2700570	L	11	P158003F	**P158003S**
570		L	11		 **P158004S**
SHF400	270817	R	23 + 4		 **P158005S**
M44DSE 44I 45I Scorpion Super Mangouste SM350 35 I 42I M 441 RL851	2304601 270023 270024 270010	R	32 + 6		 **P158006S**
Fulgor: 5000 6000 7500 1000		R	17		 **P158007S**
Fulgor 5000 6000 6000+	270115	R	45		**P158019R**
Minotor		R	25		**P158022S**
37 I		R	33 + 6		**P158025S**
Fulgor 7000 plus	374121	R	14		 **P158026S**
702 SL500	270064	R	56		**P158028R**
Axiona		R	44 + 6		**P158030S**
Argos 500			43 + 8		**P158031K**
420 SE 430 PRO 470 SE 471 SE 480 PRO Mangouste Castor Argo 48	255150 230554 255131	B	25		 **M158008S**
420SE 470SE	255134 71098017	B	25		**M158009H**
420 SE 430 PRO 471 SE 480 PRO Scorpion Mangouste	255130 255161 255161	B	20		 **M158010S**
Mangouste Super Mangouste M350 PRO35 TI35I		R	20		**M158011H**

ROUSSEAU					
Type of hedgecutter	OEM reference	Rotation	Displ. (cm³)	HYDROKIT version	ORIGINAL version
35BSR RL851 420SE 421.42 DSP SHF 400		R	20		**M158011H**
420 SE Super Mangouste	270028 255120	R	26		**M158012H**
451 SE 451 SP 471 SPE SM521 425 sp 702 SP 452	255133	B	28		**M158013R**
451 SP	255106 385498	B	28		**M158014R**
500SL			30		**M158015M**
420SE		L	30		**M158016R**
430 470SE 470SP 480PRO	255131	B	25		 **M158017S**
44I 45I 45SI	255154	B	22		 **M158018S**
Super Mangouste		B	19		 **M158020S**
Fulgor 7500 Fulgor 5000	Replacement kit piston pump		45		**KP158Y02V1**
Fulgor 6000 Fulgor 7000	385498 3797902 255165	Engine			**Repair service**

SMA					
Type of hedgecutter	OEM reference	Rotation	Displ. (cm³)	HYDROKIT version	ORIGINAL version
Tigre 8		R	40 + 12		**P160002H**
Jaguar		R	75		**P160004D**
Jaguar Lynx Puma 7		R	92 + 20		**P160006D**
Leopard 475		R	55 + 11		**P160008S**
Lynx		R	38		**P160012S**
Serval		R	14		**P160013S**
Jaguar		L	25		 **P160014S**
1000		R	38		 **P160015S**
Panther		R	38 + 11		**P160016S**
Jaguar		R	38 + 28		**P160019Y**
Jaguar Compact 5CS41			46		**P160020S**
Leopard		B	46		**M160001O**
SF 146		B	24		**M160002O** **M160002A**
MK6		B	34		**M160003A**
Leopard 490		B	41		**M160005W**
MK 5 Panther C		B	34		**M160009A**
Lynx		B	24		**M160012O**

PUMPS FOR COMBINES/FORAGERS

BOURGOIN

Type of combine	OEM reference	Rotation	Displ. (cm³)	HYDROKIT version	ORIGINAL version
GX 400		L	31 + 22		P023001H
		L	25 + 25 + 22		P023002H
MD 8 (69)		L	8 + 4		P023003H

BRAUD

Type of combine	OEM reference	Rotation	Displ. (cm³)	HYDROKIT version	ORIGINAL version
602, 604		R	14		P083001H
1014		L	25 + 20 + 20		P083003H
60, 605, 700, 701, 801		L	14 + 8		P083004H
605, 700, 701, 750, 800, 801	20012960	L	14		P083005S
640		L	10		
MV 1114		L	25 + 20		P083007H
MV 2720		R	23 + 20		P083008D
602, 604		R	14		P083009H
MV 2720		R	28 + 20 + 20		P083010D

CLAAS

Type of combine	OEM reference	Rotation	Displ. (cm³)	HYDROKIT version	ORIGINAL version
114 CS MEGA 218 Forage harvester 690	0070603.2	L	6 + 12 + 4		P061501A
88, 96, 98, 106 MEGA360 MEDION 310	656860 683500 93200756	L	6 + 12	P061502F1	
8208 4086 0880	0759700	L	9 + 6 + 12		P061503Q
DOMINATOR CLASS 88 SL LEXION 460, 860		R	19		P061504S
VARIO 750					P061505B
TELESCO C50	3339110228 3181820				P061507D
LEXION 420		L	14 + 6		P061508S
LEXION	0683630.0	R	100	Service exchange REPSAUES518457	
LEXION	0669018.2	R	100	Service exchange REPSAUES502051	
LEXION	0668740.2	R	130	Service exchange REPSAUES501838	
LEXION	/	R	100	Service exchange REPSAUES11036852	
LEXION	0683631.1	R	130	Service exchange REPSAUES516458	
LEXION	0668741.0	Motor Both ways	100	Service exchange REMSAUES501829	
LEXION	0669133.0	Motor Both ways	100	Service exchange REMSAUES513904	
LEXION	/	Motor Both ways	100	Service exchange REMSAUES519390	
Ranger 920		L	37		P061509D
MEGA 204	9350058		90R075NA	Repair service	

DEUTZ

Type of combine	OEM reference	Rotation	Displ. (cm³)	HYDROKIT version	ORIGINAL version
M900, 1000, 1102, 1202	1116220520 2239042	L	15	P085001F	
3580, 2680, 2780	6261692 6261693 1212322990000 06261692	L	11 + 8		P085002S
1600 H		L	15		P085004S
3610, 4070H		L	11 + 8		P085005S
1620		L	11 + 8		P085006S
4075		L	14 + 4 + 8		P085007S
4080		L	14 + 4 + 8		P085008S

IH

Type of combine	OEM reference	Rotation	Displ. (cm³)	HYDROKIT version	ORIGINAL version
321, 431, 531, 541	3159857R91 3159857R92	L	10 + 6		P021501S
923, 933, 943, 953	3170290R91	L	8 + 4		P021502S
MB DANIA		L	11.3 + 26		P021503M
AXIAL 1440		R	26		P021504H
AXIAL 1660, 1680	1272258C91 1272258C92				P021505W

FIAT SOMECA

Type of combine	OEM reference	Rotation	Displ. (cm³)	HYDROKIT version	ORIGINAL version
103, 133, 140, 153		L	8		P092001S
133, 135, 140, 153, 722, 1500, 1520/1530	396468 442800	L	11		P092002S
133, 135, 140, 153, 1500, 1520, 1530/1545		L	11	P092003F	P092003S
135/140, 1520/1530, 1540/1550, 1555, 8050/8060, 8070/8080	387505 426984 421597 421596	L	17	P092004F	P092004S
TF 44, TF 42		L	19		P092005S
8530 8060, 8070, 8080		L	11 + 6		P092006S P092006H
8040		R	11		P092007S
TF42, TF44		L	19 + 8		P092008S
TX 34		R	15 + 8		P092009S
8050		R	11 + 6		P092010S
TX36		R	19 + 8		P092011S
Heston 7720, 7725		L	11 + 2.2		P092012S
TA150 MB LAVERDA M132 forage harvester		L	15 + 4.5		P092013M
TC 50		L	19		P092015S
LAVERDA 524, 624		L	11 + 6		P092020S
LAVERDA 624	322104500	L	100		P092023S
LAVERDA 624	89508952	Motor Both ways	100		M092002S
Autoloader					P092014N
LAVERDA 5270AL					P219S18BCS + CP20K
CX740 straw spreader motor					M092001S

JOHN DEERE

Type of combine	OEM reference	Rotation	Displ. (cm³)	HYDROKIT version	ORIGINAL version
MB 1052		L	15		P090001S
Forage harvesters: 6610, 6710, 6810, 6910, 2054	AZ49120 AZ49121	L	11 + 8 + 6		P090002B
MB 1177, 1188	AZ365555	L	16 + 6		P090003B
1085					P090005N
970	AZ19692				P090006N
MB 1065, 1075, 1085	AZ25777 AZ51046 AZ33650	L	18 + 6		P090007E
		L	14 + 8 + 6		P090008B
5820					P090011W
1075					P090012A
MB 1065, 1075	3349122106 AZ33650 AZ51047				P090012A
CTS9780					P090013S
CTS9780		L	22		P090014S

MASSEY FERGUSON

Type of combine	OEM reference	Rotation	Displ. (cm³)	HYDROKIT version	ORIGINAL version
487, 387		R	8		P091001S
520	619601M91	R	11 + 4		P091002B
530, 520, 560, 565Pas, 660	3916242M1 3373620M1 3374034M91	L	17 + 7		P091003H
MF506, MF307	1604632	L	6		P091004E
MF 510		R	18 + 6		P091005H
327		L	11 + 26		P091006M
27		L	11 + 16		P091007M
MF36, MF38, MF40	ULTRA 6685 3398 8381 8666	L	11.3 + 26		P091008N

CONSTRUCTION MACHINE PUMPS

JCB		
Type of machine	**Manufacturer reference**	**Hydrokit ref.**
3CX Turbo de 1985 – 3C of 1989	MOD03101102	**P128001S**
3CX Turbo 1000 series	MOD20/203600 MOD20/205200	**P128002S**
3D2 – 3C5 – 3C – 3C2	MOD20/200400	**P128003S**
525B4HL – 520 – 520H4L – 530 Forklift 930 – 2CX – 926 – 940	MOD20/203200 MOD20/202900	**P128005D P128005S**
325.65 – 525.67 – 525.58 – 530.110 – 930.95 408	MOD20/202500 MOD20/202700	**P128006AD P128006AS**
525.52 – 527.58 – 527.67 – 537 – 520.110	20/902400	**P128006BS**
525.58 – 525.67 – 530.110 – 530.120 530.95	MOD20/203800 MOD20/204900	**P128008S**
3C – 4C – 3DII – 3CXP6	919/27000 919/74200	**P128010W**
3C – 4C – 3DII – 3CXP6	920/27100 919/72400	**P128011W**
3CXP7 – 3CXP8 – 3CX4Turbo 33700 from 1989 3CX4	919/66800 919/62400 919/71400	**P128012W**
3C – 3D – 3C III	919/21800	**P128013W**
510.40 – 508 – 508C – 530.120 – 537.120 537.130 – 540.120	20/901100 20/908700 20/901100R	**P128014S**
520.4	-	**P128015S**
Mini excavator 801 – 801.4 – 801.5 (1995 – 1996)	MOD20/204100 MOD20/300800	**P128016S**
530 – 540	MOD20/202800	**P128018S**
3CX	919/66900 919/71500	**P128019W**
3CX4 – 412840 – 3CX – 410000 – 436 – 790 3CX II	20/903100 20/912800R	**P128020W**
Backhoe loader 2DX (1996) – 2CX (1998)	20/906700	**P128021D**
Backhoe loader 2DX (1996) – 2CX	20/906100	**P128022D**
802 – 803 – 802.7	20/905100 20/90800	**P128025D**
1CX – Robot 165	20/205500 20950285	**P128026S**
Mini excavator 801.4 – 801.5 – 801.5 Power Plus 801.6 – Forklift 926	-	**P128027D P128027K**
520	MOD20/202600	**P128028S**
-	206100 – 208100	**P128030S**
803	20/901600 20903700	**P128031D**
2D – 3C2 (1970)	MOD12689	**P128032S**
2CX	-	**P128033D**
3CX	04/500217	**P128035A**
1CX	-	**P128036W**
4CX	919/71800R 91968600	**P128037W**
Fastract 1135	-	**P128028S**
Loader 406 – 407 – 408 – 408B – 409 926 – 934	20/209800 20/908400	**P128039S**
Loader 420	-	**P128040C**
410 – 412	-	**P128041C**
JBC 1X	-	**P128042S**
JBC3CX4	-	**P128043S**
Backhoe loader 3C3 – 3D	-	**P128044C**
Robot 170	-	**P128045W**
Fastrac	201208	**P128046S**
802	-	**P128050D**
Fastrac	-	**P128052S**
3C III	-	**P128053W**
807	-	**P128054W**
JS160	-	**P128056Y**
520	-	**P128059C**
Fastrac	-	**P128060S**
Loader 409B	-	**P128061S**
1CX	-	**P128062S**
1CX	-	**P128063S**
Fastrac – 1134	-	**P128064S**
520	-	**P128065C**
525 – 52	20/908100	**P128066C**
JCB 2DII	-	**P128068C**
3CXL	-	**P128069A**
FASTRAC	A40/12,8L36326	**P128071S**
TLT30D	-	**P128072A**
2CX	ULTRA 4506	**P128075W**
426	Steering pump	**P128080W**
803	-	**P128085W**

CONSTRUCTION MACHINE PUMPS (CONT.)

MANITOU		
Type of machine	**Manufacturer reference**	**Hydrokit ref.**
MC15 (1969-1973) – MB20SM – MB20 MC6 – MC20 – MC20E – MC25 – MC25A	-	**P106001AF**
BS423 Power-assisted steering – 35C 4RM – 9049	-	**P106002F**
MB20C – MB25C – MB30C – 20C4RM 25C4RM – MB2500H	49054	**P106003S**
MC50SC – MT425C – MB30	24456	**P106004S**
MB20C – MB25C – MB30C – 20C4RM 25C4RM – MB2500H	-	**P106005L**
MB20C – MB21C – MB30J – MB30A – MB30	-	**P106008D P106008H**
MB30C	-	**P106009H**
MB21C – MB21J – MB30J – MC40TC M26NF – 425	53840	**P106010D P106010H**
MB20C – MB25F – MB30G – MC30C	25237 – 173284 176797	**P106011D**
MT425CP – 425SP – MLT425 – MT431CP	75998 – 177896	**P106014H**
626MTL	8779	**P106015D**
626MTL	928	**P106016D P106016S**
MB70H – MB60C – MC40C	-	**P106017E**
4RE25RH	-	**P106018H**
MC15A – MC18A – MC20 – MT20	-	**P106019H**
MCE30H – MCE25H – MCL25H – MCL30	-	**P106020H**
MB20SA – 440TP	-	**P106021H**
MT430CPS	-	**P106022S**
MC40CP	-	**P106023H**
MC50EC	-	**P106024H**
MCL30H – MCE25H – MC20H	-	**P106025H**
Models MLT 526, 630, 626, 725 Ultra Mono, Ultra Turbo series,	197297	**P106026D**
MCE20 – MCE25H – MCE25HZ	-	**P106028H**
MC80F – MC100	-	**P106031H**
CPH250	-	**P106032H**
MT1425CP	-	**P106033H**
727	L10400	**P106034A**
MLT728	-	**P106036D**
MLT728	6783 – 212846	**P106037D**
MB25	-	**P106038S**
KR2J	-	**P106039H**
840	-	**P104041A**

MERLO		
Type of machine	**Manufacturer reference**	**Hydrokit ref.**
P26.6LPT – P26.6SPT – P26.6EVT P28.7EVT – P30.7	-	**P139001K P139001S**
P25.7	-	**M139002R**
P25.7 – P30.7	-	**P139003S**
P27	-	**P139004S**
P37 XS – P359XS	-	**P139005S**
P20.6	-	**P139006S**
P23.6	-	**P139007S**
MULTIFARMER	-	**P139008K**

MATBRO		
Type of machine	**Manufacturer reference**	**Hydrokit ref.**
Telestar 3, 260X, 905, 930, T260	-	**P136001S**
TS260	-	**P136002S**
TS280	-	**P136003D**
TR250, TS350	-	**P136004D**
TR200, TS270, TS280, TS350	37791	**P136005D**
RWC Teleshift, TS240, TS440	-	**P136006W**
TS270	-	**P136007D**
TS290	-	**P136011D**
270	-	**P136014D**

JOHN DEERE		
Type of machine	**Manufacturer reference**	**Hydrokit ref.**
450A, E7450	-	**P127002S**
450 Telescopic	-	**P127003D**
450 Telescopic	-	**P127004D**
455A	-	**P127005N**

SANDERSON CLAAS		
Type of machine	**Manufacturer reference**	**Hydrokit ref.**
11.30, 11.35	-	**P152001S**
T2 6.22, T2 7.25	81.62222/6	**P152002C**
907T	-	**P152003C**
		P152003W
RL7	-	**P152004D**
1130	-	**P152006W**
K70	-	**P152013A**

FDI SAMBRON DERRUPE TRAMAC		
Type of machine	**Manufacturer reference**	**Hydrokit ref.**
Sambron Derrupe backhoe loader	Y402D/7110	**P111001S**
DIM25S	-	**P111002E**
924S	-	**P111003E**
924T, J24T, 2504	55380.0 + 59981.1	**P111004H**
AM22	-	**P111005F**
425M 225	-	**P111006H**
		P111006S
T26 series, T2665	88252.2	**P111007H**
Drop 2000	-	**P111009H**
T2260, T2565	100435-13M 100496-09N	**P111011S**
J24, 25X	-	**P111012H**
		P111012S
Jack 24S	-	**P111013H**
Jack 35	-	**P111014S**
D1000	-	**P111015S**
D20	311172	**P111016G**
Derrupe CD4 compactor	-	**M111017C**
CMJ24, 25TX, J24T	-	**P111018S**
Derrupe CD3 compactor	N1243530 P1949608	**P111019H**
Sambron 2P28	-	**P111020S**
DX, D35	-	**P111021H**
J24S	-	**P111022S**
T2265, T2565	-	**P111023S**
J24S	-	**P111025S**
2DX, 3DX	-	**P111031H**
ITL9050	-	**P111032S**
T25/56	23271200	**P111036R**
JV24	-	**P111037S**
MF8926	-	**P111038R**
T25.66, T30.71, T30.93, T40.140	-	**P111040H**
D3100/2902	-	**P111041R**
T130	-	**P111042R**
T25/26	-	**P111045H**
T130.30	-	**P111047S**
T130.30	-	**P111048H**
J24T	-	**P111052S**
T3570	-	**P111053S**

Headquarters: +33 (0)2 51 34 10 10 / **UK:** +44 (0)1728 684 800

HYDRAULIC RESERVOIRS

Specifications

- 2 mm steel reservoir, delivered in a black exterior paint finish.
- Equipped with a level gauge and filler cap.
- Nominal filtration 30 µm.
- Bypass valve 1.5 bar.

Usable capacity (l)	Max. flow rate (l/min)	Plate aperture (BSP)	Reference without return filter	With return filter reference	Spare cartridge reference	Fill cap reference
12	55	Ø 3/4"	**701015**	**701015F**	CRS07025NA	**BR300**
25	55	2 x Ø 3/4"	**701025**	**701025F**	CRS07025NA	**BR300**
40	65	Ø 1"	**701040**	**701040F**	CRS07025NA	**BR500**
80	100	2 x Ø 1"1/4	**701080**	**701080F**	CRS12025NA	**BR500**
100	160	2 x Ø 1"1/2	**701100**	**701100F**	CRS16025NA	**BR500**
150	160	2 x Ø 1"1/2	**701150**	**701150F**	CRS16025NA	**BR500**

12 and 25-litre models

Dimensions of 25-litre model in brackets

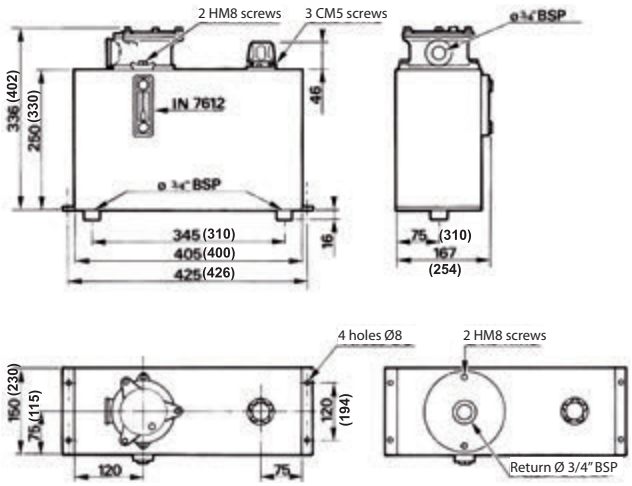

40-litre model

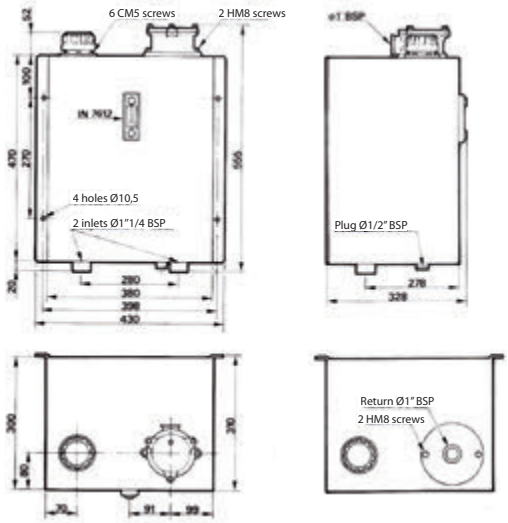

80-litre model

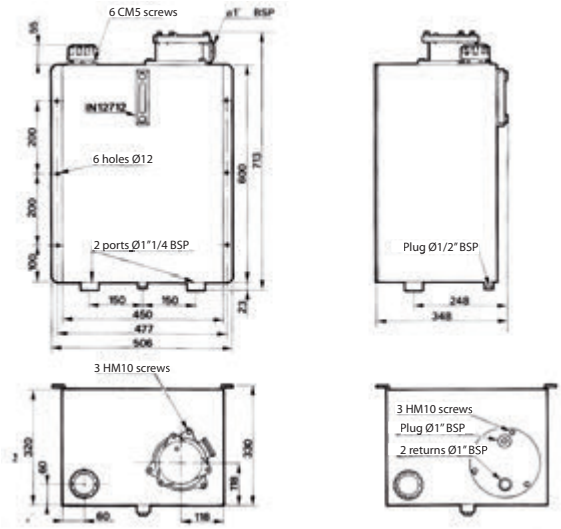

100 and 150-litre models

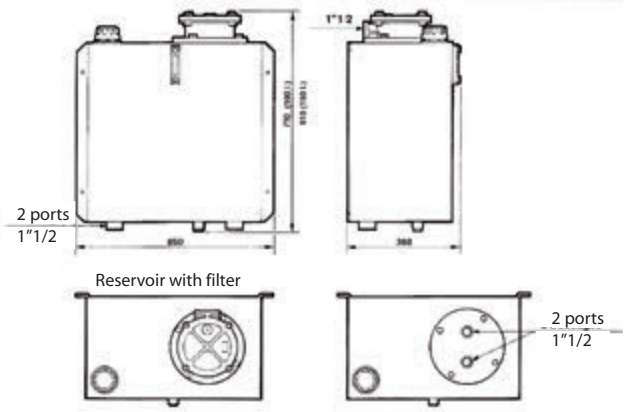

Dimensions in mm

FILLER CAPS

Reservoir mounting	Cap exterior dimensions h x Ø (mm)	Item	Cap reference	Cork seal reference
3 M5 screws on Ø 42	43 x Ø 46.5	1	BR300	UC13806
6 M5 screws on Ø 72	58.2 x Ø 76.2	2	BR500A	UC11635
6 M5 screws on Ø 72.5	56.5 x Ø 81	3	BR500AD	UC11635
6 M5 screws on Ø 72.5	56.5 x Ø 81	4	BR500AD3	UC11635
Models 3 and 4: overflow prevention caps.				

BREATHER CAPS

Material	Mounting A	Level of filtration	B	C	D	E	F	L	CH	Reference	Item
Plastic	3/8" BSP	10 µ	-	-	-	-	-	-	-	BR038	1
Plastic	1/2" BSP	10 µ	-	-	-	-	-	-	-	BR012	
Plastic	3/4" BSP	10 µ	-	-	-	-	-	-	-	BR034	
Plastic	3/8" BSP	60 µ	36	23	17	5	11	4	-	BR038GH	2
Plastic	1/2" BSP	60 µ	41	28	18	5	12	4	-	BR012GH	
Plastic	3/4" BSP	60 µ	47	33	17	5	12	5	-	BR034GH	
Plastic	1" BSP	60 µ	52	38	20	5	12	5	-	BR100GH	
Plastic	1" 1/4 BSP	60 µ	63	49	23	5	13	5	-	BR114GH	
Plastic	1" 1/2 BSP	60 µ	63	55	23	5	13.5	5	-	BR112GH	
Brass	1/4" BSP	-	20	9	-	-	-	-	17	REN014	3
Brass	3/8" BSP	-	19	9	-	-	-	-	20	REN038	
Brass	1/2" BSP	-	19	10	-	-	-	-	24	REN012	
Brass	3/4" BSP	-	23	12	-	-	-	-	32	REN034	
Brass	1" BSP	-	30	13	-	-	-	-	40	REN100	

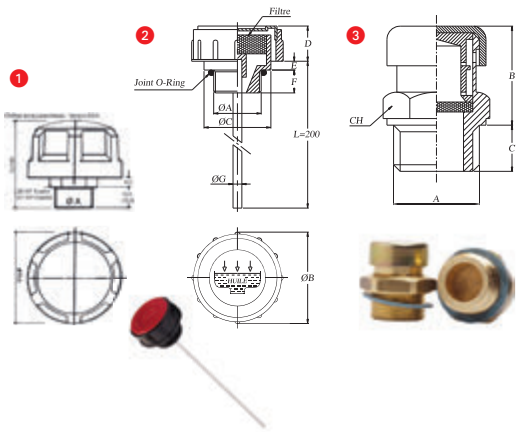

CARTRIDGE AIR FILTERS FOR RESERVOIR

Sleeve thread	Level of filtration	Reservoir mounting	Height without cartridge (mm)	Complete reference: seal, screw, tube, filter	Spare cartridge reference	Item
3/4"	5 µm	3 M5 screws on Ø 42	40	FAR03005NA	CFA5	1
	5 µm	6 M5 screws on Ø 72	40	FAR03005NB	CFA5	
	5 µm	6 M5 screws on Ø 72	190	FAR03005NC	CFA5	
	10 µm	3 M5 screws on Ø 42	40	FAR05010NA	CRL05010NA	
	10 µm	6 M5 screws on Ø 72	40	FAR05010NB	CRL05010NA	
	10 µm	6 M5 screws on Ø 72	190	FAR05010NC	CRL05010NA	
1" 1/4	10 µm	6 M5 screws on Ø 72	40	FAR14010NA	CRL14010NA	1
1" 1/2	2 µm	6 Ø6 holes on Ø 73	Total height: 244 mm	FAR15003AA	PA38800001	2
Cork seal, 3 screws: UC13806				Cork seal, 6 screws: UC11635		

LEVEL INDICATORS

External dimensions	Distance (mm)	Fastener diameter (mm)	Thermometer	Reference
108 x 34.5	76	10	No	IN7610
108 x 34.5	76	12	No	IN7612
108 x 34.5	76	12	Yes	INT7612
159 x 34.5	127	12	No	IN12712
159 x 34.5	127	12	Yes	INT12712
159 x 34.5	127	10	Yes	INT12710
159 x 34.5	127	12	Yes	INT12712
285 x 34.5	254	10	No	IN25410
285 x 34.5	254	10	Yes	INT25410
285 x 34.5	254	12	Yes	INT25412

Level indicator accessories

		12	60°C probe	TSE65C12
		12	80°C probe	TSE80C12

Digital level indicators

Visual and digital level indicator L = 127 1	12		A4200
Screw-on digital level indicator L = 300 2	1" BSP		INEF300
Screw-on digital level indicator L = 600 2	1" BSP		INEF600
Digital level indicator set on flange L = 300 3	Flange + screw		PA69100005
Double threshold digital level indicator L = 550 4	Flange + screw		INEF5502N

AIR DRYER FILTERS

Reference: DC2

Reference support: DC12

Level indicators Contact us

Complete list of brass, polyamide and aluminium level indicators

FILTRATION, IN-LINE (SPIN ON)

Features

In-line filter for suction and return circuits.

- Cast aluminium body.
- Bypass valve calibrated to 0.17 bar (FAL) and 1.05 bar (FRL).
- Optical clogging indicator in series.
- Max. working pressure: 7 bar.
- Filtration media: 10 µm absolute, fibreglass composite, 25 µm absolute, impregnated cellulose.
- Temperature: -30°C to +90°C

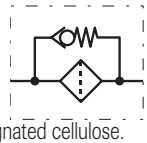

Absolute filtration (µm)	Mounting C BSP-BSPP	Suction		Return		Spare cartridge Reference	A mm	B mm	D mm	E mm	F mm	G mm	ØH mm	I mm	L mm	M mm	P mm	Q mm	R mm	S mm	Item
		Max. flow rate (l/min)	Reference	Max. flow rate (l/min)	Reference																
10	3/4	8	**FAL01510AA**	45	**FRL04010AA**	**CRL04010AA**	195	46	18	96	21	215	96	54.5	38	78	26	50	16	19.5	1
25	3/4	15	**FAL01525AA**	60	**FRL04025AA**	**CRL04025AA**	195	46	18	96	21	215	96	54.5	38	78	26	50	16	19.5	1
10	1" 1/4	25	**FAL06010AA**	120	**FRL12010AA**	**CRL12010AA**	248	64	22	134	33	273	128	72	50	114	37	59	15	20.5	2
25	1" 1/4	50	**FAL06025AA**	180	**FRL12025AA**	**CRL12025AA**	248	64	22	134	33	273	128	72	50	114	37	59	15	20.5	2
10	1" 1/2	70	**FAL15010AA**	240	**FRL28010AA**	**2 x CRL12010AA**	214	249	181	126	-	-	-	-	-	-	-	-	-	-	3
25	1" 1/2	110	**FAL15025AA**	360	**FRL28025AA**	**2 x CRL12025AA**	214	249	181	126	-	-	-	-	-	-	-	-	-	-	3

1 2

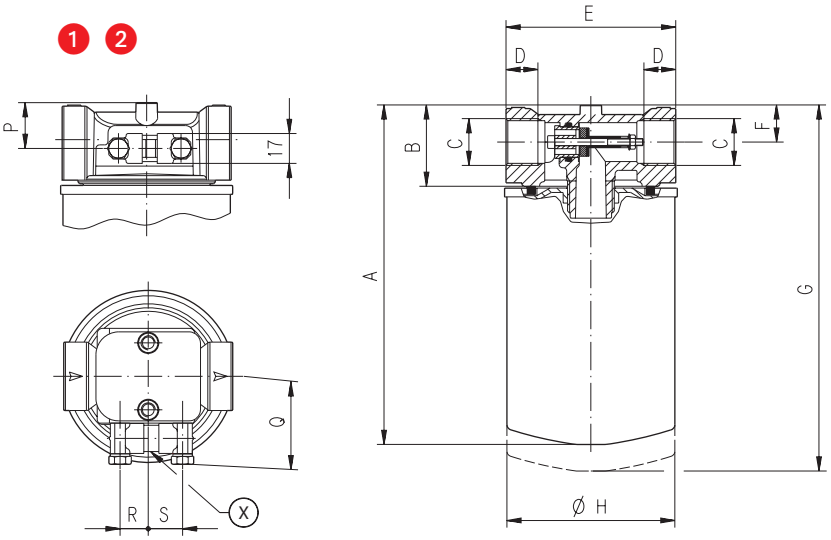

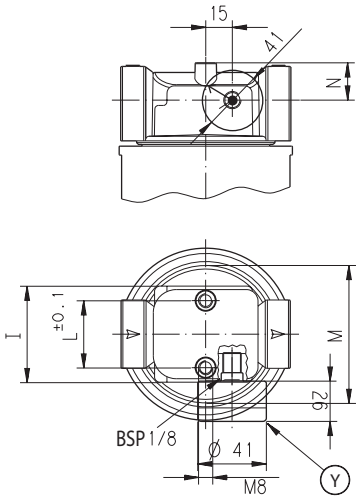

3

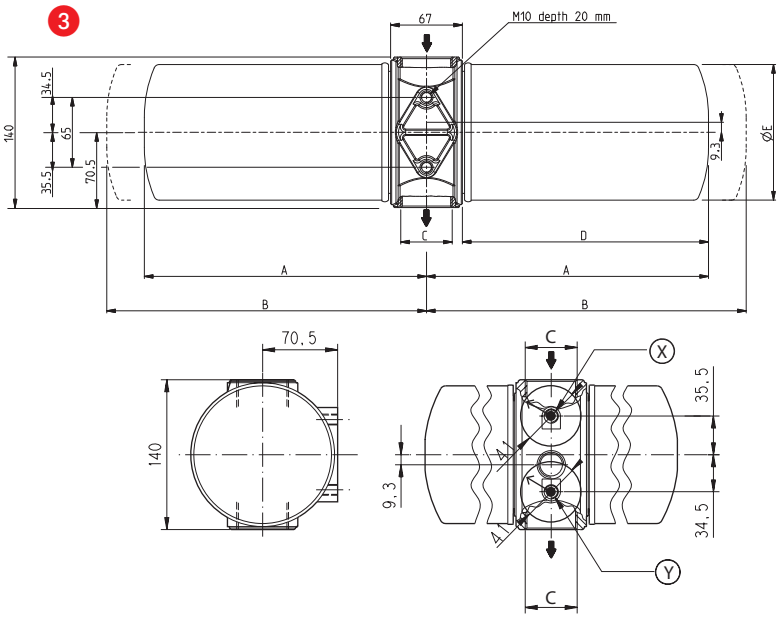

• Pressure drop in the filter head

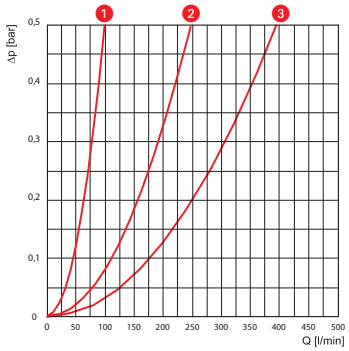

• Pressure drop when passing through the filter media

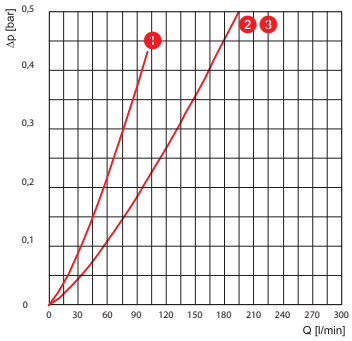

RETURN FILTERS, SEMI-IMMERSED

Features

- Max. working pressure: 10 bar.
- Bypass valve calibrated to 1.5 bar.
- Standard filtration: 30 µm nominal (contact us for other filtration levels).
- Filter media: paper.
- Adjustment on the reservoir top.
- Filter delivered with cartridge.

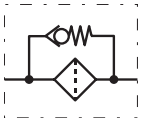

Max. flow rate (l/min)	Mounting ①	A (mm)	B (mm)	C (mm)	D (mm)	E (mm)	F (mm)	G (mm)	H (mm)	I (mm)	L (mm)	M (mm)	O (mm)	P (mm)	Reference	Item	Spare cartridge reference
20	1/2"	24	62	66.5	83	54.5	8	20.5	22	52.6	51	88 to 90	104	7	**FRS02525NA**	1	**CRS02525NA**
40	3/4"	27.4	80	80	106.6	73	11	28.5	27	67	67	114 to 116	135	8.5	**FRS04525NA**	1	**CRS04525NA**
65	1"	27.4	80	80	151.5	73	11	28.5	27	67	67	114 to 116	135	8.5	**FRS07025NA**	1	**CRS07025NA**
100	1"	40.5	111	129	229.5	86.5	12	35.5	36.5	-	95	175	195	-	**FRS12025NA**	2	**CRS12025NA**
140	1" 1/2	50	151	174	171	108	11.5	41	44.5	-	119	220	242	-	**FRS16025NA**	3	**CRS16025NA**

1

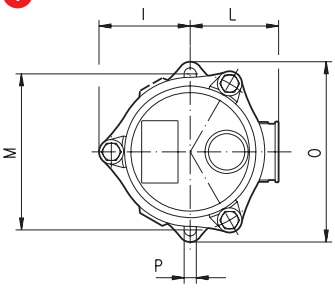

2

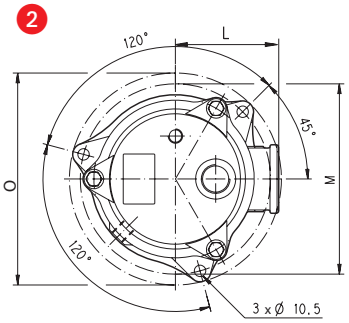

3

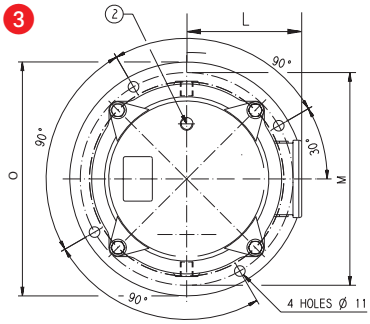

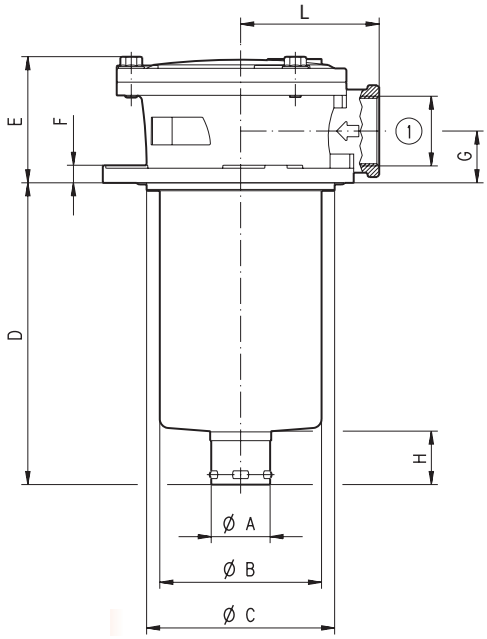

CLOGGING INDICATOR

Optical clogging indicator	Electrical clogging indicator
IFRV018	**ICRE018**

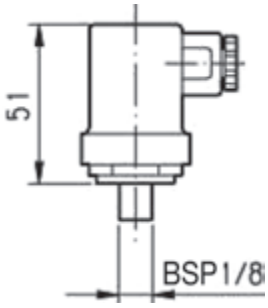

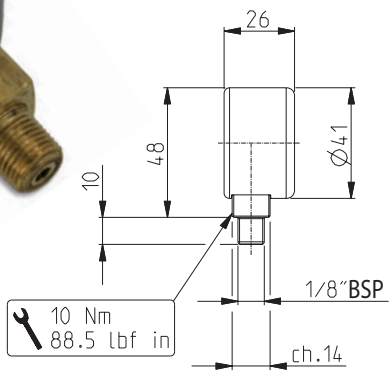

IN-LINE FILTRATION 60 TO 320 L/MIN

Features

- Working temperature: -30°C to +90°C.
- Inorganic filter.
- Level of filtration 10 µm absolute (ß10 = 200).
- Max. differential pressure: 20 bar.

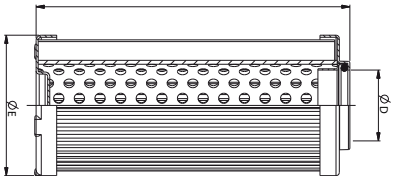

Flow rate (l/min)	Bypass valve calibration (bar)	Maximum/test pressure (bar)	A (mm)	Mounting B (BSP)	D (mm)	E (mm)	F (mm)	Filter surface cm²	Retention (ISO MTD) Δp = 5 bar (g)	Filter reference	Item	Cartridge reference
50	6	420 / 600	199	1/2"	25.5	46.5	113	560	4.5	**FPL06010AB**	1	**CPL06010AD**
80	6	280 / 420	250	3/4"	27.5	54.5	122	908	7.3	**FPL08010AB**	2	**CPL08010AC**
145	6	280 / 420	358	1"	27.5	54.5	230	1808	14.5	**FPL12010AB**	2	**CPL12010AD**

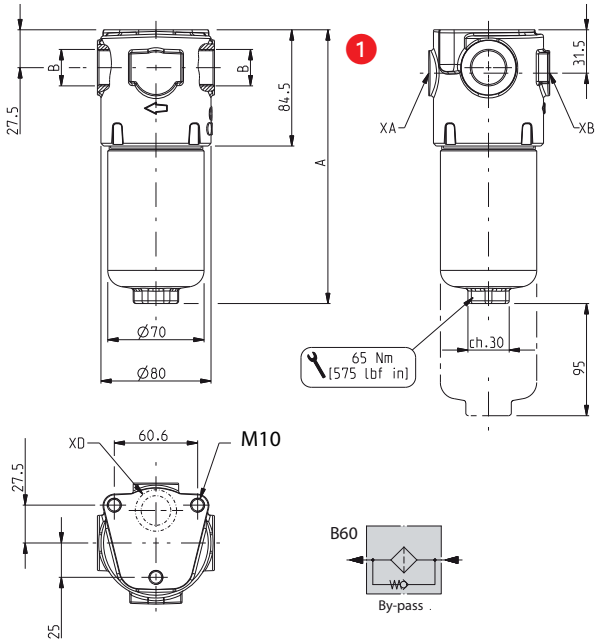

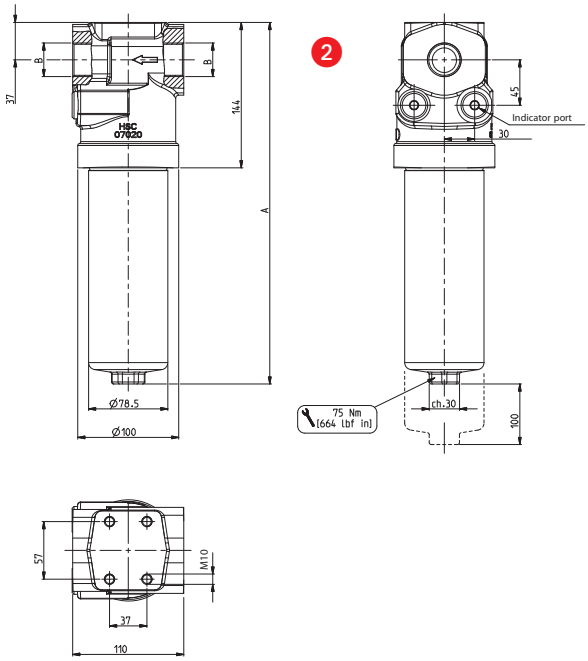

SUCTION STRAINERS

Features

- Metal wire sieve.
- Filtration level: 125 µm.
- Working temperature: -20°C to +90°C.

A (BSP)	B (mm)	C (mm)	CH (mm)	Flow rate at 125 µm (l/min)	Reference
3/4"	103	70	34	30	**FAI030125A**
1"	148	70	34	55	**FAI055125A**
1" 1/4	154	99	60	80	**FAI080125A**
1" 1/2	200	99	60	130	**FAI130125A**
2"	235	130	100	200	**FAI200125A**
2"	279	130	100	250	**FAI250125A**

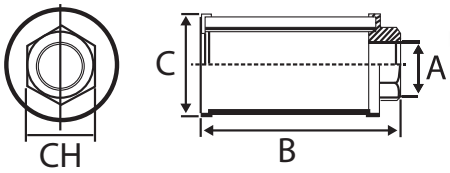

CLOGGING INDICATORS FOR PRESSURE FILTERS

Optical clogging indicator	Electrical clogging indicator
IFP80V1	**IFP80E1**

Oil analysis Contact us

HEAT EXCHANGERS

• Just one reference for a complete set (bypass, sensor, fan, etc.).

Specifications

- Opening pressure: 2 bar.
- Max. pressure: 30 bar.
- Aluminium profile.
- Voltage: 12, 24, 220 and 380 V.
- Different temperature probes are available.
- Fully-integrated bypass.

Item	Flow rate (l/min)	Reference without fan	Reference with fan			Reference fan only
			Voltage	Power	Reference	
1	15 - 80	RHC08000B	12 VDC	90 W	RHC080A1B	VRHA19012G
			24 VDC	75 W	RHC080A2B	VRHA19024G
			220/380 three-phase	200 W	RHC080A3B	VRHA190380G
			230 VDC monophase		RHC080A4B	VRHA190230G
2	20 - 110	RHC11000B	12 VDC	90 W	RHC110A1B	VRHA30512G
			24 VDC	75 W	RHC110A2B	VRHA30524G
			220/380 three-phase	200 W	RHC110A3B	VRHA305380G
			220 VDC monophase		RHC110A4B	VRHA305230G
3	45 - 160	RHC16000B	12 VDC	90 W	RHC160A1B	VRHA30512G
			24 VDC	75 W	RHC160A2B	VRHA30524G
			220/380 three-phase	200 W	RHC160A3B	VRHA305380G
			220 VDC monophase		RHC160A4B	VRHA305230G

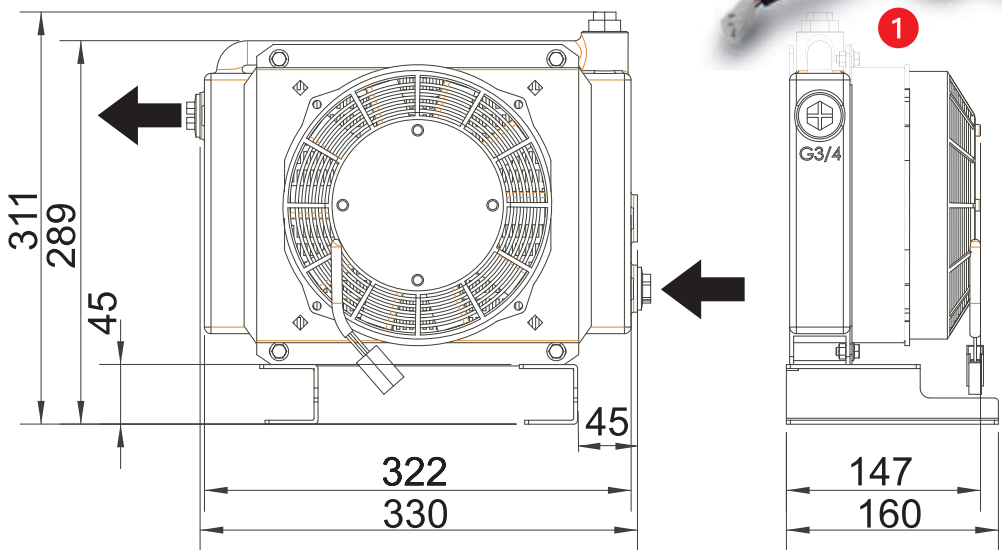

• Pressure drop

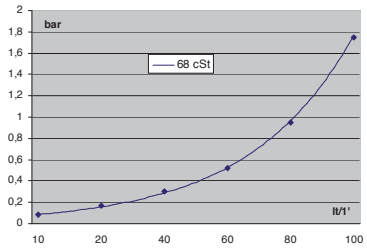

• Exchange capacity

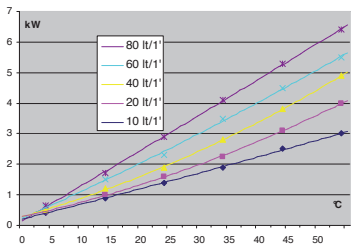

I = Hydraulic, P = 12/24 V, 220 V = 220/380 V

HEAT EXCHANGERS (CONT.)

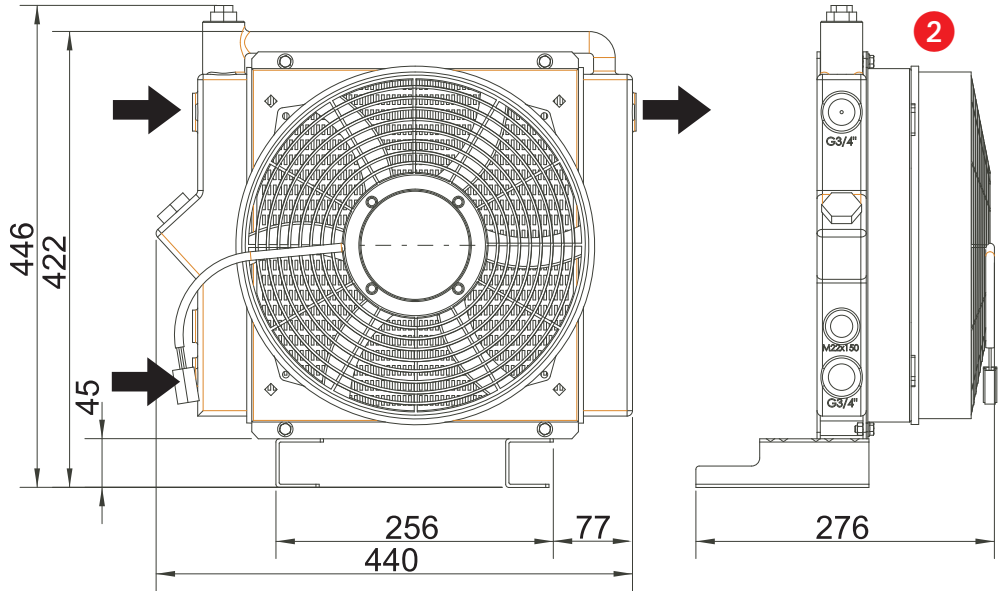

• Pressure drop

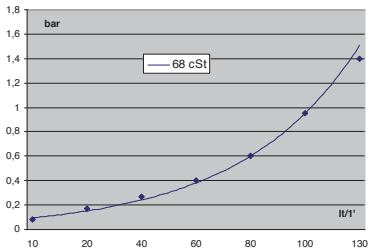

• Exchange capacity

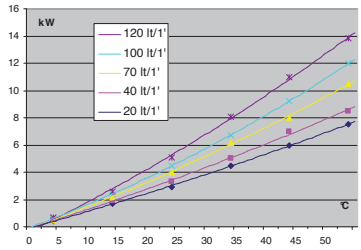

I = Hydraulic, P = 12/24 V, 220 V = 220/380 V

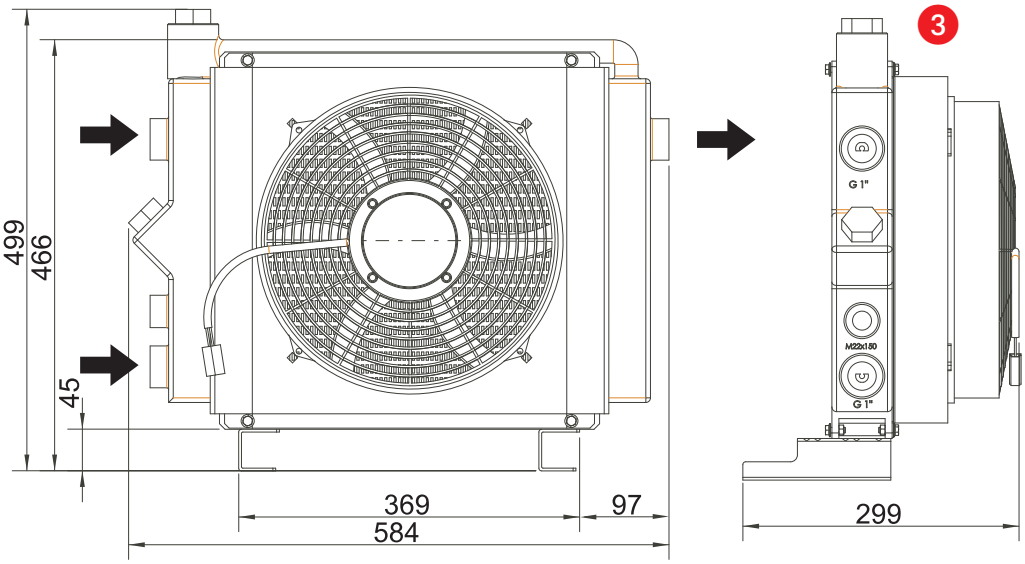

• Pressure drop

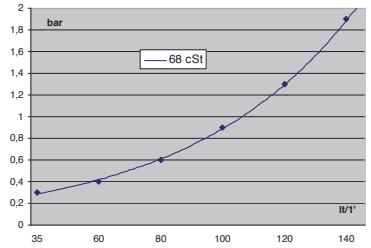

• Exchange capacity

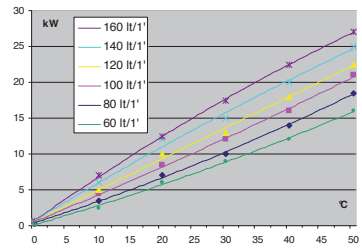

I = Hydraulic, P = 12/24 V, 220 V = 220/380 V

Exchanger flow rate greater than 120 l/min Contact us

TEMPERATURE SENSORS FOR COOLERS

Contact temperature	Thread	Reference	Sealing ring reference
35 to 45	22 x 150	**TC3545**	**BS22**
50 to 60	22 x 150	**TC5060**	**BS22**
70 to 80	22 x 150	**TC7080**	**BS22**

FAN ELECTRONIC MODULES

The electronic module enables instant reversal of the exchanger fan's direction of rotation in order to blow the dust off the exchanger's grill, and keep the oil cool over time.
Comment: the air flow can decrease, depending on the shape of the fan blades.

- Operates at 12 V and 24 V.
- No circuit disruption: smooth start-up.
- The cycle operates 15 minutes in the normal direction, then 30 seconds in the opposite direction.
- Diagnostics: a control indicator can be connected.

Reference:
E12MVENTI1

15 minutes
30 seconds

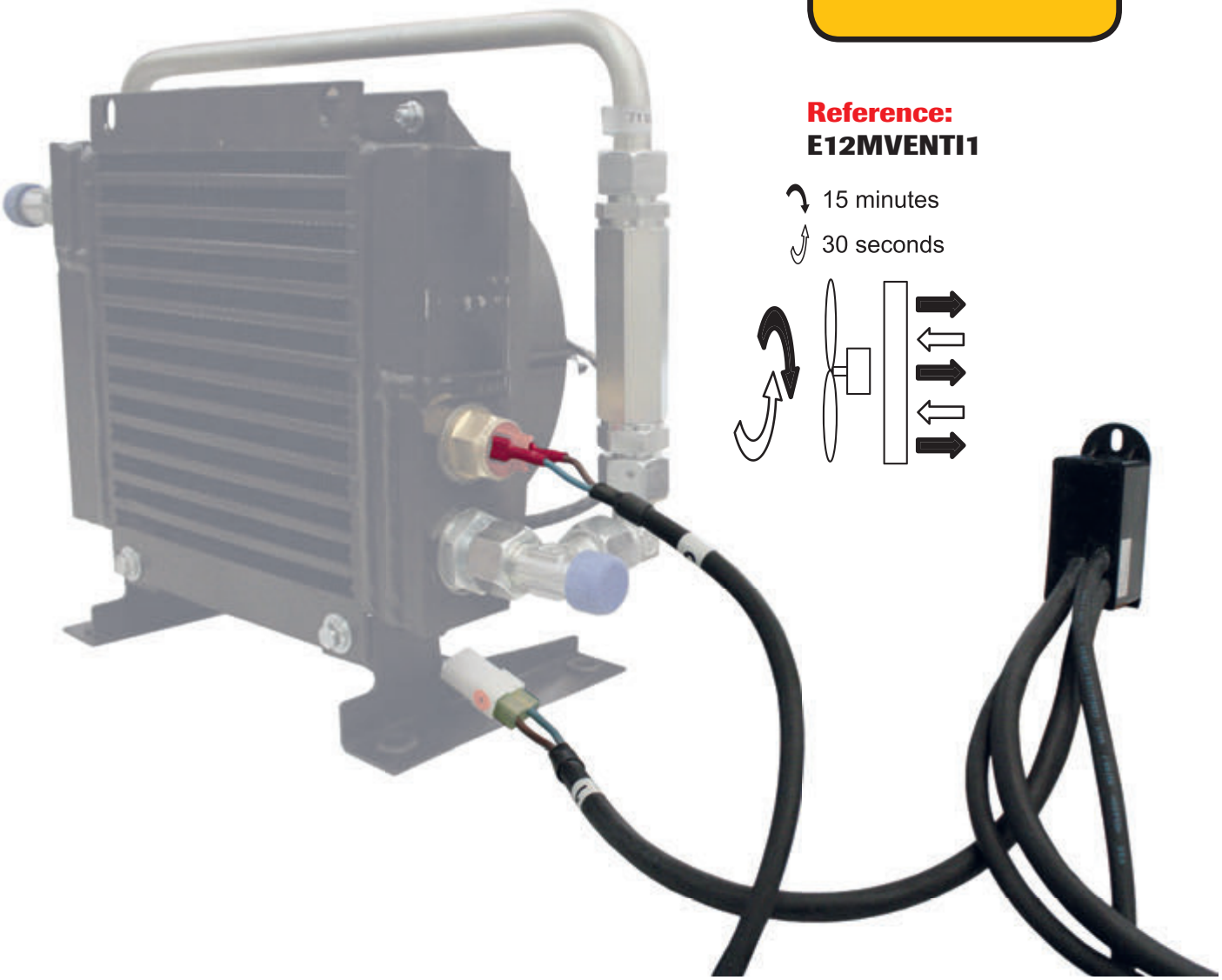

Headquarters: +33 (0)2 51 34 10 10 / UK: +44 (0)1728 684 800

CALCULATION OF DISPLACEMENT

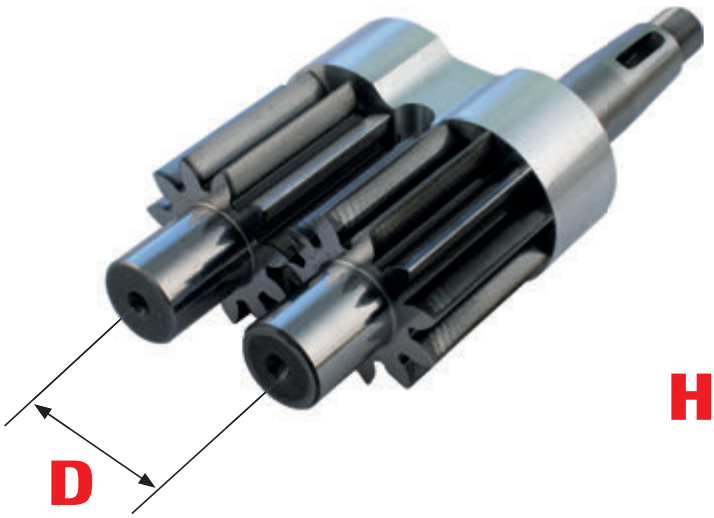

D = centre-to-centre distance between the 2 pinions

W = width of the pinion tooth

H = tooth height

Values in cm

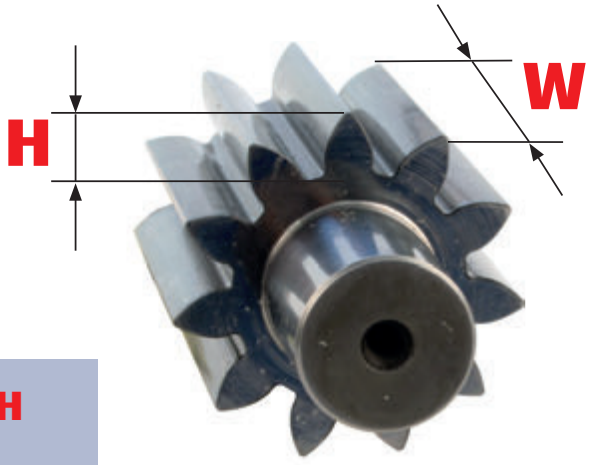

Displacement = 3.14 x D x W x H (cm³/rev)

HYDROKIT GROUP 1 PUMPS
ITALIAN FRONT FLANGE - 1/8 TAPER SHAFT

Displacement (cm³/rev)	Max. working pressure (bar)	Max. speed (rpm)	Minimum speed (rpm)	A	B	Suction			Delivery			Reference
						E	d	F	E	d	F	
1	250	3500	750	39.1	81	30	M6	12	30	M6	12	**P110 . 18BBF**
1.25	250	3500	750	39.5	82	30	M6	12	30	M6	12	**P112 . 18BBF**
1.6	250	3500	750	40.3	83.6	30	M6	12	30	M6	12	**P116 . 18BBF**
2	250	3500	750	41.1	85.2	30	M6	12	30	M6	12	**P120 . 18BBF**
2.5	250	3500	750	42.1	87.2	30	M6	12	30	M6	12	**P125 . 18BBF**
3.15	250	3500	750	43.5	89.8	30	M6	12	30	M6	12	**P131 . 18BBF**
3.65	250	3500	750	44.4	91.9	30	M6	12	30	M6	12	**P136 . 18BBF**
4.2	250	3500	750	45.5	94.1	30	M6	12	30	M6	12	**P142 . 18BBF**
5	250	3000	750	47.1	97.2	30	M6	12	30	M6	12	**P150 . 18BBF**
5.7	200	3000	750	48.5	100.1	30	M6	12	30	M6	12	**P157 . 18BBF**
6.1	200	2500	750	49.4	101.8	30	M6	12	30	M6	12	**P161 . 18BBF**
D = clockwise rotation; S = anti-clockwise rotation												

Specify the desired rotation in your order: D or S in place of the dot

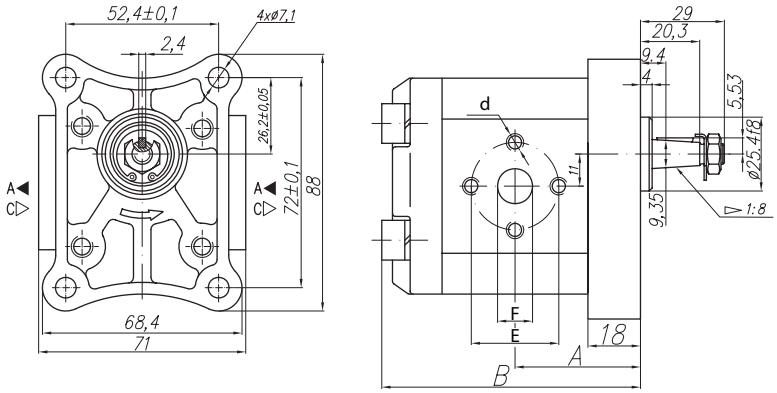

Flanges for pumps See page 183

HYDROKIT GROUP 2 PUMPS
ITALIAN FRONT FLANGE - 1/8 TAPER SHAFT

Displacement (cm³/rev)	Max. working pressure (bar)	Max. speed (rpm)	Minimum speed (rpm)	A	B	Suction			Delivery			Reference
						E	d	F	E	d	F	
4.5	250	3500	650	42.5	80	30	M6	13	30	M6	13	P204 . 18BBF
6.3	250	3500	650	42.5	80	30	M6	13	30	M6	13	P206 . 18BBF
8.2	250	3500	650	42.5	80	30	M6	13	30	M6	13	P208 . 18BBF
10	250	3500	650	47	89	40	M8	19	30	M6	14	P210 . 18BCF
11.3	250	3500	650	48	91.1	40	M8	19	30	M6	14	P211 . 18BCF
12	250	3500	650	48.6	92.3	40	M8	19	30	M6	14	P212 . 18BCF
14	250	3500	650	50	95.4	40	M8	19	30	M6	14	P214 . 18BCF
15	250	2500	650	51	96.9	40	M8	19	30	M6	14	P215 . 18BCF
16	250	2500	650	52	98.6	40	M8	19	30	M6	14	P216 . 18BCF
19	200	2500	650	54	103.5	40	M8	19	30	M6	14	P219 . 18BCF
22	180	2000	650	57	108.5	40	M8	19	30	M6	14	P222 . 18BCF
25	160	2000	650	59.2	113.4	40	M8	19	40	M8	19	P226 . 18BDF
D = clockwise rotation; S = anti-clockwise rotation												

Specify the desired rotation in your order: D or S in place of the dot

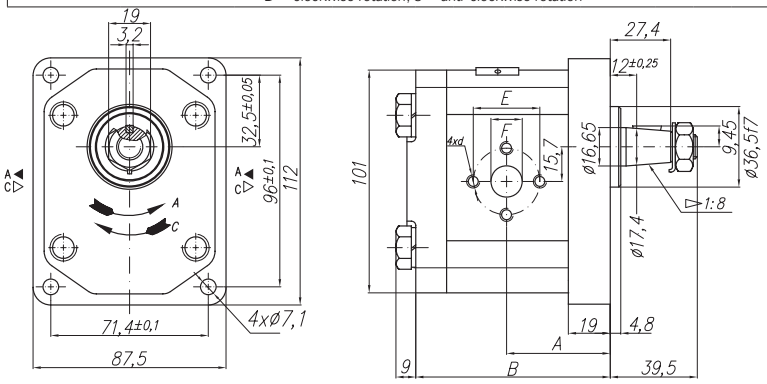

PUMP GROUP 2, HYDROKIT PRODUCT
BOLT-THROUGH FRONT FLANGE - 1/5 TAPER SHAFT

Displacement (cm³/rev)	Max. working pressure (bar)	Max. speed (rpm)	Minimum speed (rpm)	A	B	Suction			Delivery			Reference
						E	d	F	E	d	F	
4.5	250	3500	650	37.3	75.1	40	M6	15	35	M6	15	P204 . . 5ABF
6.3	250	3500	650	38.6	78	40	M6	15	35	M6	15	P206 . . 5ABF
8.2	250	3500	650	40.6	78	40	M6	20	35	M6	15	P208 . . 5ABF
10	250	3500	650	45	87	40	M6	20	35	M6	15	P210 . . 5ABF
11.3	250	3500	650	45	89.1	40	M6	20	35	M6	15	P211 . . 5ABF
12	250	3500	650	45	90.3	40	M6	20	35	M6	15	P212 . . 5ABF
14	250	3500	650	45	93.4	40	M6	20	35	M6	15	P214 . . 5ABF
15	250	2500	650	45	94.9	40	M6	20	35	M6	15	P215 . . 5ABF
16	250	2500	650	45	96.5	40	M6	20	35	M6	15	P216 . . 5ABF
19	200	2500	650	45	101.5	40	M6	20	35	M6	15	P219 . . 5ABF
22	180	2000	650	52.5	106.5	40	M6	20	35	M6	15	P222 . . 5ABF
25	160	2000	650	57.2	111.4	40	M6	20	35	M6	15	P226 . . 5ABF
D = clockwise rotation; S = anti-clockwise rotation												

Specify the desired rotation in your order: D or S in place of the dot

Specify the front flange in your order: 3 or 4 in place of the dot

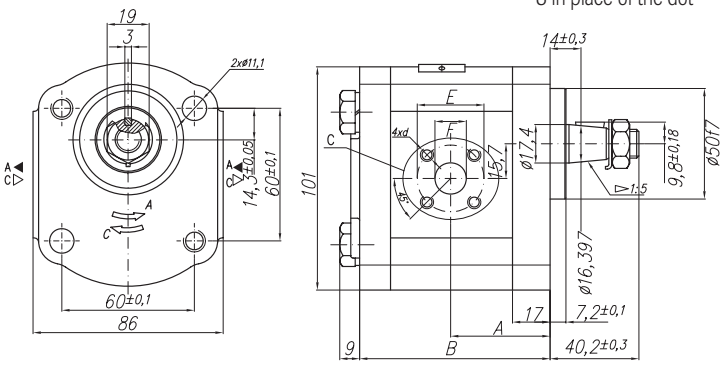

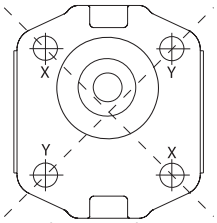

Flange 3 = XX bores
Flange 4 = YY bores

3 = the 2 fastening openings of the pump are on the XX axis

4 = the 2 fastening openings of the pump are on the YY axis

HYDROKIT GROUP 2 PUMPS
SAE A FRONT FLANGE - 9-TOOTH SPLINED SHAFT

Displacement (cm³/rev)	Max. working pressure (bar)	Max. speed (rpm)	Minimum speed (rpm)	A	B	Suction			Delivery			Reference
						E	d	F	E	d	F	
4.5	250	3500	650	42	79.6	40	M6	15	35	M6	15	**P204 . 80ABF**
6.3	250	3500	650	43.6	82.6	40	M6	15	35	M6	15	**P206 . 80ABF**
8.2	250	3500	650	45	85.6	40	M6	20	35	M6	15	**P208 . 80ABF**
10	250	3500	650	46.6	88.7	40	M6	20	35	M6	15	**P210 . 80ABF**
11.3	250	3500	650	47.6	90.7	40	M6	20	35	M6	15	**P211 . 80ABF**
12	250	3500	650	48.2	91.9	40	M6	20	35	M6	15	**P212 . 80ABF**
14	250	3500	650	49.6	95	40	M6	20	35	M6	15	**P214 . 80ABF**
15	250	2500	650	50.6	96.5	40	M6	20	35	M6	15	**P215 . 80ABF**
16	250	2500	650	51.6	98.2	40	M6	20	35	M6	15	**P216 . 80ABF**
19	200	2500	650	53.6	103.1	40	M6	20	35	M6	15	**P219 . 80ABF**
22	180	2000	650	56.6	108.1	40	M6	20	35	M6	15	**P222 . 80ABF**
25	160	2000	650	58.8	113	40	M6	20	35	M6	15	**P226 . 80ABF**
D = clockwise rotation; S = anti-clockwise rotation												

Specify the desired rotation in your order:
D or S in place of the dot

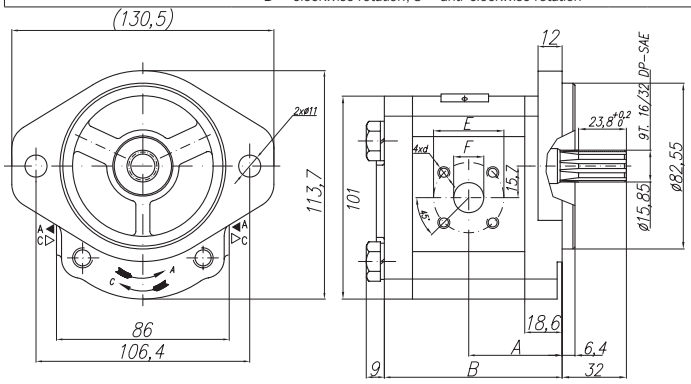

HYDROKIT GROUP 2 PUMPS
DIN FRONT FLANGE - 1/5 TAPER SHAFT

Displacement (cm³/rev)	Max. working pressure (bar)	Max. speed (rpm)	Minimum speed (rpm)	A	B	Suction			Delivery			Reference
						E	d	F	E	d	F	
4.5	250	3500	650	39.8	78	40	M6	15	35	M6	15	**P204 . 25ABF**
6.3	250	3500	650	41	81	40	M6	15	35	M6	15	**P206 . 25ABF**
8.2	250	3500	650	43.1	83.9	40	M6	20	35	M6	15	**P208 . 25ABF**
10	250	3500	650	47.5	87	40	M6	20	35	M6	15	**P210 . 25ABF**
11.3	250	3500	650	47.5	89	40	M6	20	35	M6	15	**P211 . 25ABF**
12	250	3500	650	47.5	90.3	40	M6	20	35	M6	15	**P212 . 25ABF**
14	250	3500	650	47.5	93.4	40	M6	20	35	M6	15	**P214 . 25ABF**
15	250	2500	650	47.5	95	40	M6	20	35	M6	15	**P215 . 25ABF**
16	250	2500	650	47.5	96.5	40	M6	20	35	M6	15	**P216 . 25ABF**
19	200	2500	650	47.5	101.5	40	M6	20	35	M6	15	**P219 . 25ABF**
22	180	2000	650	55	106.5	40	M6	20	35	M6	15	**P222 . 25ABF**
25	160	2000	650	57.2	111.4	40	M6	20	35	M6	15	**P226 . 25ABF**
D = clockwise rotation; S = anti-clockwise rotation												

Specify the desired rotation in your order:
D or S in place of the dot

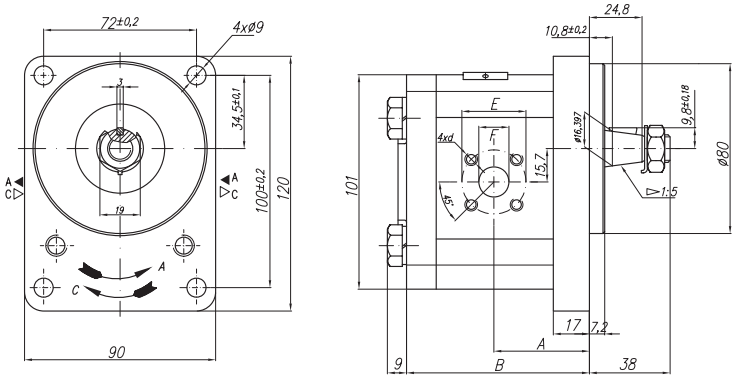

HYDROKIT GROUP 3 PUMPS
ITALIAN FRONT FLANGE - 1/8 TAPER SHAFT

Displacement (cm³/rev)	Max. working pressure (bar)	Max. speed (rpm)	Minimum speed (rpm)	A	B	Suction			Delivery			Reference
						E	d	F	E	d	F	
20	250	3000	650	56.1	116.7	40	M8	19	40	M8	19	P320 . 18BDF
22.5	250	3000	650	57.6	119.7	40	M8	19	40	M8	19	P322 . 18BDF
25	250	3000	650	58.3	121.1	40	M8	19	40	M8	19	P325 . 18BDF
32	250	3000	650	66.5	137.3	51	M10	27	40	M8	19	P332 . 18BEF
36	250	2800	650	68.0	140.5	51	M10	27	40	M8	19	P336 . 18BEF
42	230	2500	650	70.8	146.1	51	M10	27	40	M8	19	P342 . 18BEF
46	230	2300	650	72.7	149.8	51	M10	27	40	M8	19	P346 . 18BEF
50	200	2100	650	74.5	153.4	51	M10	27	40	M8	19	P350 . 18BEF
55	200	1750	650	76.7	157.9	51	M10	27	40	M8	19	P355 . 18BEF
D = clockwise rotation; S = anti-clockwise rotation												

Specify the desired rotation in your order:
D or S in place of the dot

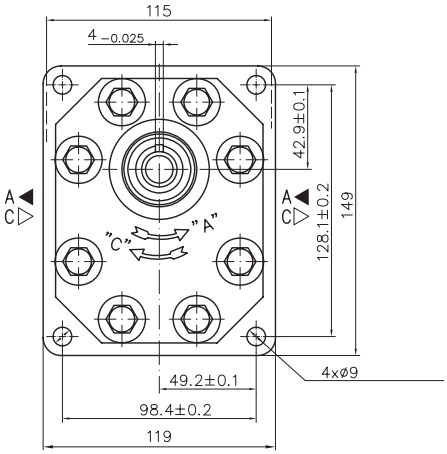

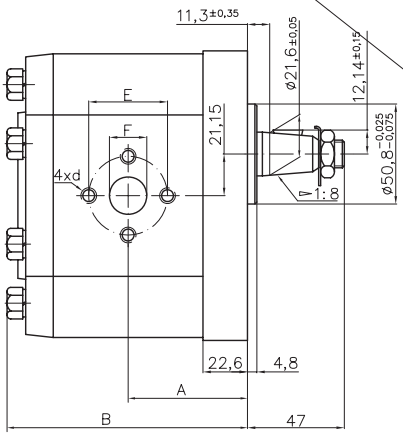

Flanges for pumps See page 183

HYDROKIT GROUP 3 PUMPS
SAE B FRONT FLANGE - 13-TOOTH SPLINED SHAFT

Displacement (cm³/rev)	Max. working pressure (bar)	Max. speed (rpm)	Minimum speed (rpm)	A	B	Suction			Delivery			Reference
						E	d	F	E	d	F	
20	250	3000	650	56.1	116.7	40	M8	19	40	M8	19	P320 . 93AEF
22.5	250	3000	650	57.6	119.7	40	M8	19	40	M8	19	P322 . 93AEF
25	250	3000	650	58.3	121.1	40	M8	19	40	M8	19	P325 . 93AEF
32	250	3000	650	66.5	137.3	55	M8	27	55	M8	19	P332 . 93ACF
36	250	2800	650	68.0	140.5	55	M8	27	55	M8	19	P336 . 93ACF
42	230	2500	650	70.8	146.1	55	M8	27	55	M8	19	P342 . 93ACF
46	230	2300	650	72.7	149.8	55	M8	27	55	M8	19	P346 . 93ACF
50	200	2100	650	74.5	153.4	55	M8	27	55	M8	19	P350 . 93ACF
55	200	1750	650	76.7	157.9	55	M8	27	55	M8	19	P355 . 93ACF
D = clockwise rotation; S = anti-clockwise rotation												

Specify the desired rotation in your order:
D or S in place of the dot

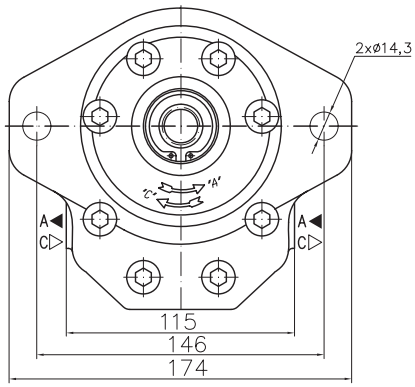

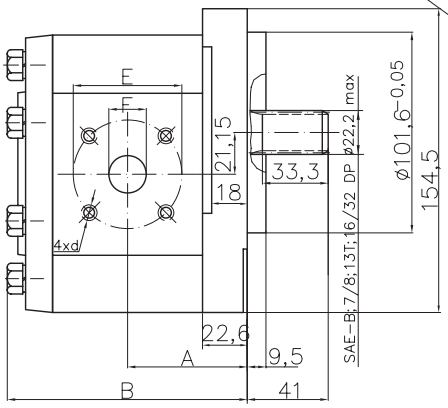

TUROLLA GROUP 1 PUMPS
ITALIAN FRONT FLANGE 1/8 TAPER SHAFT

Displacement (cm³/rev)	Max. working pressure (bar)	Max. speed (rpm)	A	B max.	Suction			Delivery			Reference
					C	D	E	C	D	E	
1.2	210	5000	37.75	79.5	12	26	M5	12	26	M5	P112 . 18BAS
1.6	210	5000	38.5	81	12	26	M5	12	26	M5	P117 . 18BAS
2.1	210	5000	39.5	83	12	26	M5	12	26	M5	P122 . 18BAS
2.6	210	5000	40.5	85	12	26	M5	12	26	M5	P126 . 18BAS
3.1	210	5000	41.5	87	12	26	M5	12	26	M5	P132 . 18BAS
3.7	210	5000	42.5	89	12	26	M5	12	26	M5	P138 . 18BAS
4.2	210	3000	43.5	91	12	26	M5	12	26	M5	P143 . 18BAS
5.9	160	3000	46.75	97.5	12	26	M5	12	26	M5	P160 . 18BAS
7.6	140	3000	50	104	12	26	M5	12	26	M5	P178 . 18BAS
D = clockwise rotation; S = anti-clockwise rotation											

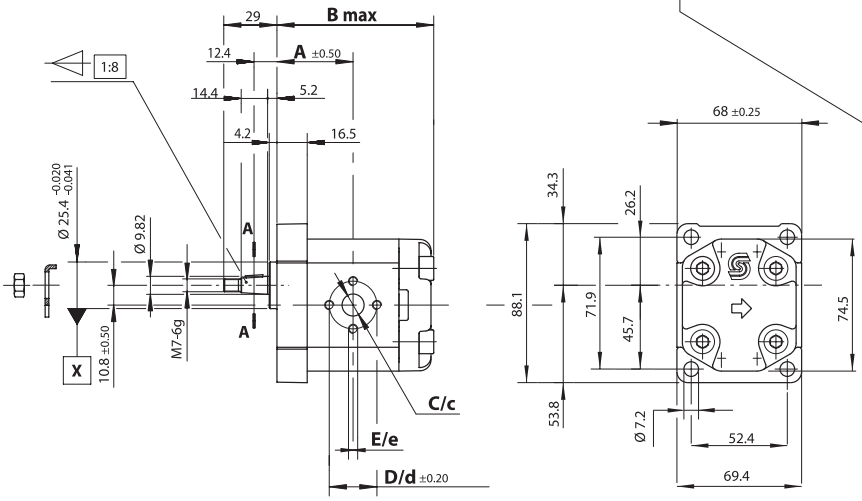

Specify the desired rotation in your order:
D or S in place of the dot

TUROLLA GROUP 2 PUMPS
ITALIAN FRONT FLANGE 1/8 TAPER SHAFT

Displacement (cm³/rev)	Max. working pressure (bar)	Max. speed (rpm)	Min. speed (rpm) (max. 100 b)	A	B max.	Suction			Delivery			Reference
						C	D	E	C	D	E	
3.9	250	4000	600	42.5	80	13.5	30	M 6	13.5	30	M 6	P204 . 18BBS
6	250	4000	600	42.5	80	13.5	30	M 6	13.5	30	M 6	P206 . 18BBS
8.4	250	4000	600	42.5	80	13.5	30	M 6	13.5	30	M 6	P208 . 18BBS
10.8	250	4000	500	47	20	40	8	M 6	13.5	30	M 6	P211 . 18BCS
14.4	250	3500	500	48	91.1	20	40	M 8	13.5	30	M 6	P214 . 18BCS
16.8	250	3000	500	48.7	92.3	20	40	M 8	13.5	30	M 6	P217 . 18BCS
19.2	210	3000	500	50.2	95.4	20	40	M 8	13.5	30	M 6	P219 . 18BCS
22.8	180	3000	500	51	96.9	20	40	M 8	13.5	30	M 6	P222 . 18BCS
25.2	160	3000	500	51.8	98.9	23.5	40	M 8	20	40	M 8	P225 . 18BDS
D = clockwise rotation; S = anti-clockwise rotation												

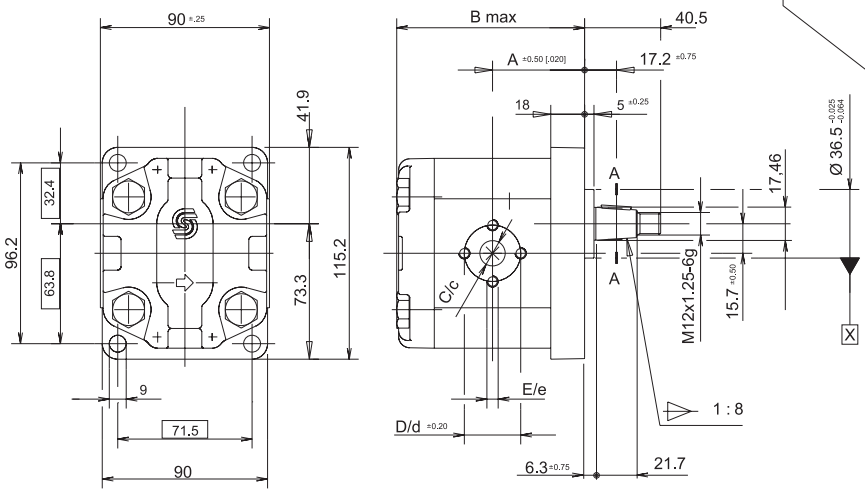

Specify the desired rotation in your order:
D or S in place of the dot

TUROLLA GROUP 2 PUMPS - DIN FRONT FLANGE

Displacement (cm³/rev)	Max. working pressure (bar)	Max. speed (rpm)	Min. speed (rpm) (max. 100 b)	A	B max.	Suction			Delivery			Reference Shaft 5 1/5 taper shaft	Reference Shaft 7 9-tooth splined shaft
						C	D	E	C	D	E		
3.9	250	4000	600	39.8	92.5	15	40	M 6	15	35	M 6	**P204 . 25ABS**	**P204 . 27ABS**
6	250	4000	600	41.1	96	20	40	M 6	15	35	M 6	**P206 . 25ABS**	**P206 . 27ABS**
8.4	250	4000	600	43.1	100	20	40	M 6	15	35	M 6	**P208 . 25ABS**	**P208 . 27ABS**
10.8	250	4000	500	47.5	104	20	40	M 6	15	35	M 6	**P211 . 25ABS**	**P211 . 27ABS**
14.4	250	3500	500	47.5	110	20	40	M 6	15	35	M 6	**P214 . 25ABS**	**P214 . 27ABS**
16.8	250	3000	500	47.5	114	20	40	M 6	15	35	M 6	**P217 . 25ABS**	**P217 . 27ABS**
19.2	210	3000	500	47.5	118	20	40	M 6	15	35	M 6	**P219 . 25ABS**	**P219 . 27ABS**
22.8	180	3000	500	55	124	20	40	M 6	15	35	M 6	**P222 . 25ABS**	**P222 . 27ABS**
25.2	160	3000	500	64.5	128	20	40	M 6	15	35	M 6	**P225 . 25ABS**	**P225 . 27ABS**
D = clockwise rotation; S = anti-clockwise rotation													

Shaft 5

Specify the desired rotation in your order:
D or S in place of the dot

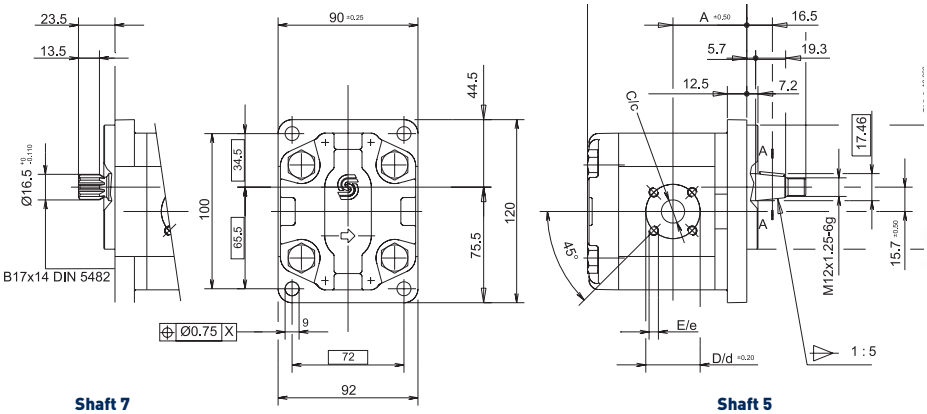

Shaft 7 **Shaft 5**

Shaft 7

TUROLLA GROUP 2 PUMPS - SAE A FRONT FLANGE

Displacement (cm³/rev)	Max. working pressure (bar)	Max. speed (rpm)	Min. speed (rpm) (max. 100 b)	A	B max.	Suction			Delivery			Reference Shaft 0 9-tooth splined shaft	Shaft 4 reference Cylindrical shaft Ø15.875
						C	D	E	C	D	E		
3.9	250	4000	600	39.8	92.5	15	40	M 6	15	35	M 6	**P204 . 80ABS**	**P204 . 84ABS**
6	250	4000	600	41.1	96	20	40	M 6	15	35	M 6	**P206 . 80ABS**	**P206 . 84ABS**
8.4	250	3500	600	43.1	100	20	40	M 6	15	35	M 6	**P208 . 80ABS**	**P208 . 84ABS**
10.8	250	3000	500	47.5	104	20	40	M 6	15	35	M 6	**P211 . 80ABS**	**P211 . 84ABS**
14.4	210	3000	500	47.5	110	20	40	M 6	15	35	M 6	**P214 . 80ABS**	**P214 . 84ABS**
16.8	180	3000	500	47.5	114	20	40	M 6	15	35	M 6	**P217 . 80ABS**	**P217 . 84ABS**
19.2	160	3000	500	47.5	118	20	40	M 6	15	35	M 6	**P219 . 80ABS**	**P219 . 84ABS**
22.8	180	3000	500	55	124	20	40	M 6	15	35	M 6	**P222 . 80ABS**	**P222 . 84ABS**
25.2	160	3000	500	64.5	128	20	40	M 6	15	35	M 6	**P225 . 80ABS**	**P225 . 84ABS**
D = clockwise rotation; S = anti-clockwise rotation													

Shaft 4

Specify the desired rotation in your order:
D or S in place of the dot

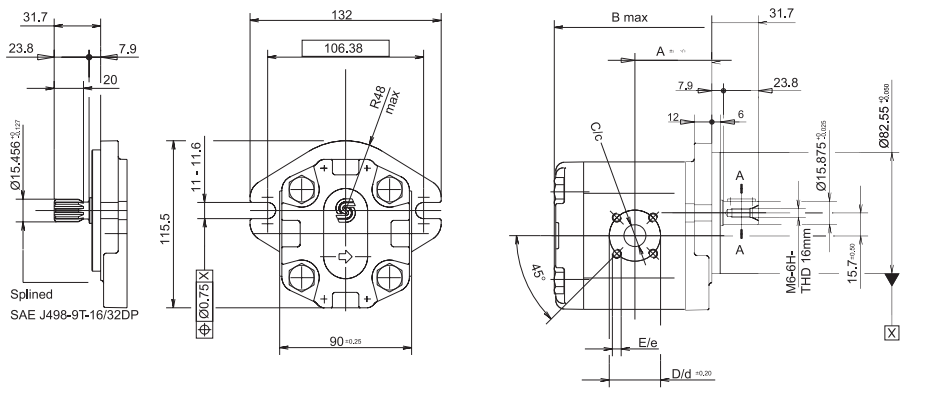

Shaft 0 **Shaft 4**

Shaft 0

TUROLLA GROUP 2 PUMPS
BOLT-THROUGH FRONT FLANGE 1/5 TAPER SHAFT

Displacement (cm³/rev)	Max. working pressure (bar)	Max. speed (rpm)	Min. speed (rpm) (max. 100 b)	A	B max.	Suction			Delivery			Reference
						C	D	E	C	D	E	
3.9	250	4000	600	37.3	81.5	15	40	M 6	15	35	M 6	P204 . . 5ABS
6	250	4000	600	38.6	85	20	40	M 6	15	35	M 6	P206 . . 5ABS
8.4	250	4000	600	40.6	89	20	40	M 6	15	35	M 6	P208 . . 5ABS
10.8	250	4000	500	45	93	20	40	M 6	15	35	M 6	P211 . . 5ABS
14.4	250	3500	500	45	99	20	40	M 6	15	35	M 6	P214 . . 5ABS
16.8	250	3000	500	45	103	20	40	M 6	15	35	M 6	P217 . . 5ABS
19.2	210	3000	500	45	107	20	40	M 6	15	35	M 6	P219 . . 5ABS
22.8	180	3000	500	52.5	113	20	40	M 6	15	35	M 6	P222 . . 5ABS
25.2	160	3000	500	62	117	20	40	M 6	15	35	M 6	P225 . . 5ABS
D = clockwise rotation; S = anti-clockwise rotation												

Specify the desired rotation in your order:
D or S in place of the dot

Specify the front flange in your order:
3 or 4 in place of the dot

3 = the 2 fastening openings of the pump are on the XX axis

4 = the 2 fastening openings of the pump are on the YY axis

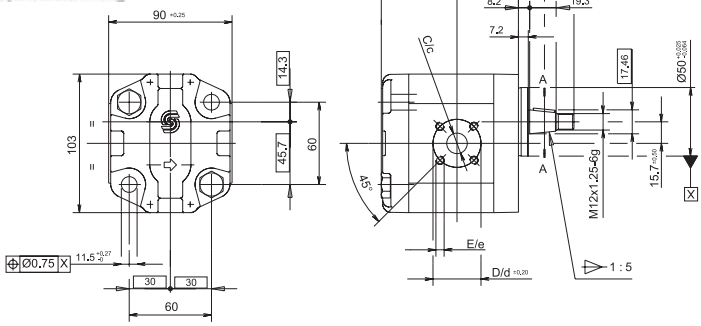

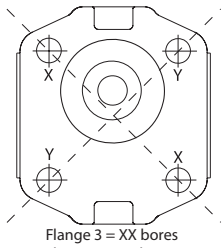

Flange 3 = XX bores
Flange 4 = YY bores

TUROLLA GROUP 3 PUMPS -
ITALIAN FRONT FLANGE 1/8 TAPER SHAFT

Displacement (cm³/rev)	Max. working pressure (bar)	Max. speed (rpm)	Min. speed (rpm) (max. 100 b)	A	B max.	Suction			Delivery			Reference
						C	D	E	C	D	E	
22.1	250	3000	800	63	132.5	20	40	M 8	20	40	M 8	P322 . 18BDS
26.2	250	3000	800	64.5	135.5	20	40	M 8	20	40	M 8	P326 . 18BDS
33.1	250	3000	800	67	140.5	27	51	M 10	20	40	M 8	P333 . 18BES
37.9	250	2500	800	68.8	144	27	51	M 10	20	40	M 8	P338 . 18BES
44.1	250	2500	800	71	148.5	27	51	M 10	27	51	M 10	P344 . 18BFS
48.3	230	2500	800	72.5	151.5	27	51	M 10	27	51	M 10	P348 . 18BFS
55.1	230	2300	800	75	156.5	27	51	M 10	27	51	M 10	P355 . 18BFS
63.4	210	2300	600	78	162.5	36	62	M 10	36	62	M 10	P363 . 18BGS
74.4	180	2300	600	84	170.5	36	62	M 10	36	62	M 10	P375 . 18BGS
88.2	150	2300	600	87	180.5	36	62	M 10	36	62	M 10	P390 . 18BGS
D = clockwise rotation; S = anti-clockwise rotation												

Specify the desired rotation in your order:
D or S in place of the dot

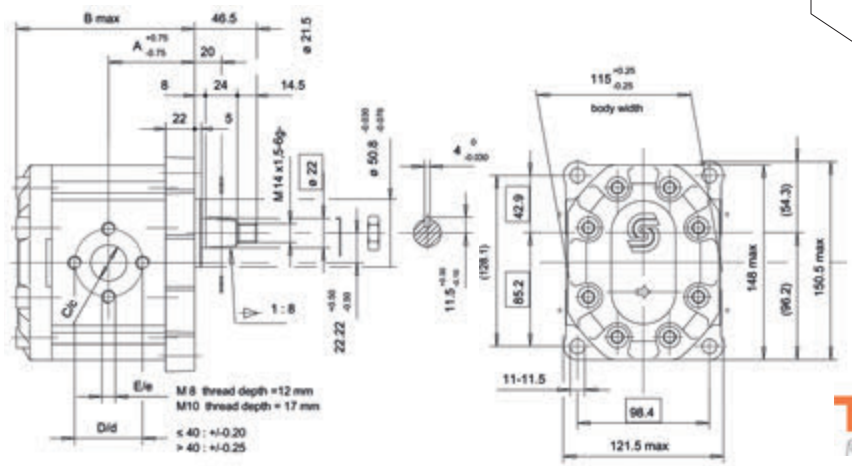

TUROLLA GROUP 3 PUMPS
SAE B FRONT FLANGE 13-TOOTH SPLINED SHAFT

Displacement (cm³/rev)	Max. working pressure (bar)	Max. speed (rpm)	Min. speed (rpm) (max. 100 b)	A	B max.	Suction				Delivery				Reference
						C	D	E	F	C	D	E	F	
22.1	250	3000	800	63	132.2	25.4	26.19	52.37	3/8 16 UNC-2B	19.1	22.23	47.63	3/8 16 UNC-2B	**P322 . 93EDS**
26.2	250	3000	800	64.5	135.5	25.4	26.19	52.37	3/8 16 UNC-2B	19.1	22.23	47.63	3/8 16 UNC-2B	**P326 . 93EDS**
33.1	250	3000	800	67	140.5	31.8	30.18	58.27	7/16 14 UNC-2B	25.4	26.19	52.37	3/8 16 UNC-2B	**P333 . 93EGS**
37.9	250	2500	800	68.8	144	31.8	30.18	58.27	7/16 14 UNC-2B	25.4	26.19	52.37	3/8 16 UNC-2B	**P338 . 93EGS**
44.1	250	2500	800	71	148.5	31.8	30.18	58.27	7/16 14 UNC-2B	25.4	26.19	52.37	3/8 16 UNC-2B	**P344 . 93EGS**
48.3	230	2500	800	72.5	151.5	31.8	30.18	58.27	7/16 14 UNC-2B	25.4	26.19	52.37	3/8 16 UNC-2B	**P348 . 93EGS**
55.1	230	2300	800	75	156.6	38.1	35.71	69.85	1/2 13 UNC-2B	31.8	30.18	58.27	7/16 14 UNC-2B	**P355 . 93EJS**
63.4	210	2300	600	78	162.5	38.1	35.71	69.85	1/2 13 UNC-2B	31.8	30.18	58.27	7/16 14 UNC-2B	**P363 . 93EJS**
74.4	180	2300	600	82	170.5	38.1	35.71	69.85	1/2 13 UNC-2B	31.8	30.18	58.27	7/16 14 UNC-2B	**P375 . 93EJS**
88.2	150	2300	600	87	180.5	38.1	35.71	69.85	1/2 13 UNC-2B	31.8	30.18	58.27	7/16 14 UNC-2B	**P390 . 93EJS**
D = clockwise rotation; S = anti-clockwise rotation														

Specify the desired rotation in your order:
D or S in place of the dot

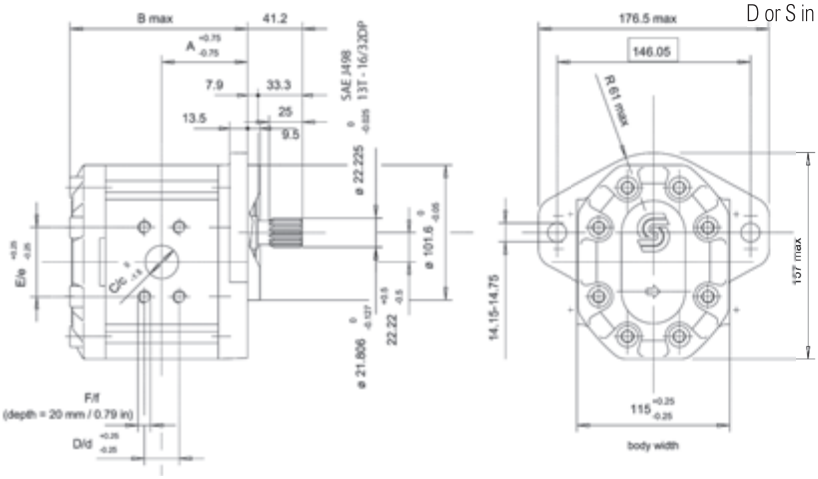

TUROLLA
fast forward thinking

ADDITIONAL OPTIONS
FOR TUROLLA AND HPI PUMPS

Rear covers with pressure relief valve for Turolla Group 2 pumps

Name	Reference
Rear cover with pressure relief valve (20 to 70 bar)	**PSCL20A70**
Rear cover with pressure relief valve (35 to 180 bar)	**PSCL35A180**
Rear cover with pressure relief valve (70 to 210 bar)	**PSCL70A210**

PSCL35A180

Rear covers with pressure relief valve for HPI Group 2 and Group 3 pumps

Name	Reference
Rear cover with pressure relief valve (20 to 90 bar)	**PHCL090**
Rear cover with pressure relief valve (160 bar)	**PHCL160**
Rear cover with pressure relief valve (180 bar)	**PHCL180**

PHCL090

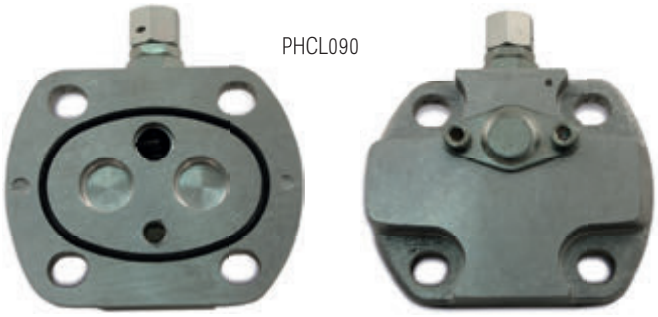

TUROLLA AND HPI MULTI-SECTION PUMPS

Feasible with a 24-hour lead time, depending on the possible combinations of the various groups: Group 3 / Group 2 / Group 1.

Turolla multiple pumps - (Specifications: see previous pages)

Group	Displacement (cm³)	A (mm)	B (mm)	C (mm)	D (mm)	E (mm)	F (mm)
1	1.2	75.75	37.75	76.00	38.00	79.75	**38.00**
	1.7	77.25	38.50	77.50	38.75	81.25	**38.75**
	2.2	79.25	39.50	79.50	39.75	83.25	**39.75**
	2.6	81.25	40.50	81.50	40.75	85.25	**40.75**
	3.2	83.25	41.50	83.50	41.75	87.25	**41.75**
	3.8	85.25	42.50	85.50	42.75	89.25	**42.75**
	4.3	87.25	43.50	87.50	43.75	91.25	**43.75**
	6	93.75	46.75	94.00	47.00	97.75	**47.00**
	7.8	100.25	50.0	100.5	50.25	104.25	**50.25**
	10	109.25	54.50	109.5	54.75	113.25	**54.75**
	12	117.25	58.50	117.5	58.75	121.25	**58.75**
2	4	87.50	43.3	87.50	43.3	93.0	**43.3**
	6	91.0	45.0	91.00	45.0	96.5	**45.0**
	8	95.0	45.0	95.00	45.0	100.5	**45.0**
	11	99.0	49.0	99.00	49.0	104.5	**49.0**
	14	105.0	52.0	105.0	52.0	110.5	**52.0**
	17	109.0	52.0	109.0	52.0	114.5	**52.0**
	19	113.0	56.0	113.0	56.0	118.5	**56.0**
	22	119.0	59.0	119.0	59.0	124.5	**59.0**
	25	123.0	59.0	123.0	59.0	128.5	**59.0**
3	22	126.0	63.0	126.0	63.0	132.5	**63.0**
	26	129.0	64.5	129.0	64.5	135.5	**64.5**
	33	134.0	67.0	134.0	67.0	140.5	**67.0**
	38	137.5	68.8	137.5	68.8	144.0	**68.8**
	44	142.0	71.0	142.0	71.0	148.5	**71.0**
	48	145.0	72.5	145.0	72.5	151.5	**72.5**
	55	150.0	75.0	150.0	75.0	156.5	**75.0**
	63	156.0	78.0	156.0	78.0	162.5	**78.0**
	75	164.0	82.0	164.0	82.0	170.5	**82.0**
	90	174.0	87.0	174.0	87.0	180.5	**87.0**

Thickness of the coupling kit - K mm		
Gr 1 + Gr 1	0	**Communicating by leakage**
Gr 2 + Gr 1	0	**Communicating by leakage**
Gr 2 + Gr 2	0	**Watertight**
Gr 3 + Gr 1	0	**Communicating by leakage**
Gr 3 + Gr 2	25.0	**Communicating by leakage**
Gr 3 + Gr 3	0	**Communicating by leakage**

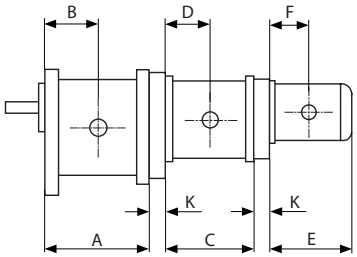

HPI multiple pumps - (Specifications: see following pages)

Group	Displacement (cm³)	R	S	T	U	V	Q	L	M	N	F	G	K
1	1 to 3										17.9	35.8	**18**
	4 to 6										22.7	45.6	**18**
2	4 to 12						42	23.5	47	24			
	15 to 22						42	31	61.6	24			
	26 to 30						42	38.8	77.7	24			
3	20 to 40	36.3	72.7	50	25	45							
	50 to 60	49.5	99.2	50	25	45							
	71 to 100	59.2	119.2	50	25	45							

Mounting combinations between multiple pumps are possible:

Groups	Suction element communication	Independent suction elements (internal communication)	Water-tightness between pumps
	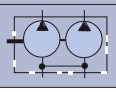	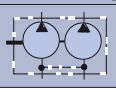	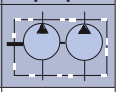
1/1	x	x	
2/1	x	x	**x**
2/2	x	x	**x**
3/2	x	x	**x**
3/3	x	x	
x: possible versions			

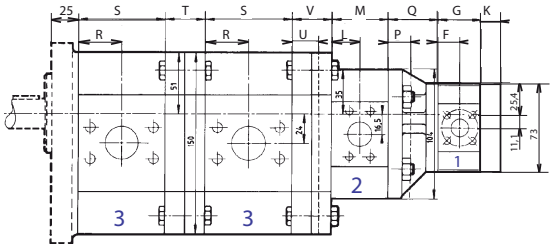

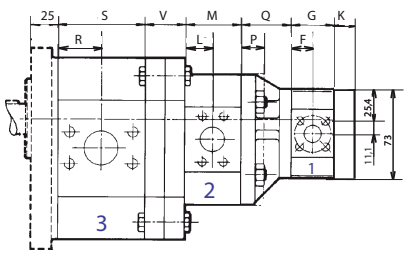

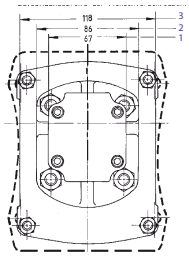

HPI GROUP 1 PUMPS
ITALIAN FRONT FLANGE -1/8 TAPER SHAFT

Displacement (cm³/rev)	Max. working pressure (bar)	Max. speed (rpm)	A	B	Suction		Delivery		Reference
					C	D	C	D	
1.02	300	8000	71.8	35.4	14	30	14	30	P110 . 18AAU
2.05	300	8000	71.8	35.9	14	30	14	30	P120 . 18AAU
3.07	300	7000	71.8	35.9	14	30	14	30	P130 . 18AAU
4.04	250	6000	81.6	40.7	14	30	14	30	P140 . 18AAU
5.12	250	6000	81.6	40.7	14	30	14	30	P150 . 18AAU
6.14	250	5000	81.6	40.7	14	30	14	30	P160 . 18AAU
D = clockwise rotation; S = anti-clockwise rotation									

Specify the desired rotation in your order:
D or S in place of the dot

JTEKT HPI

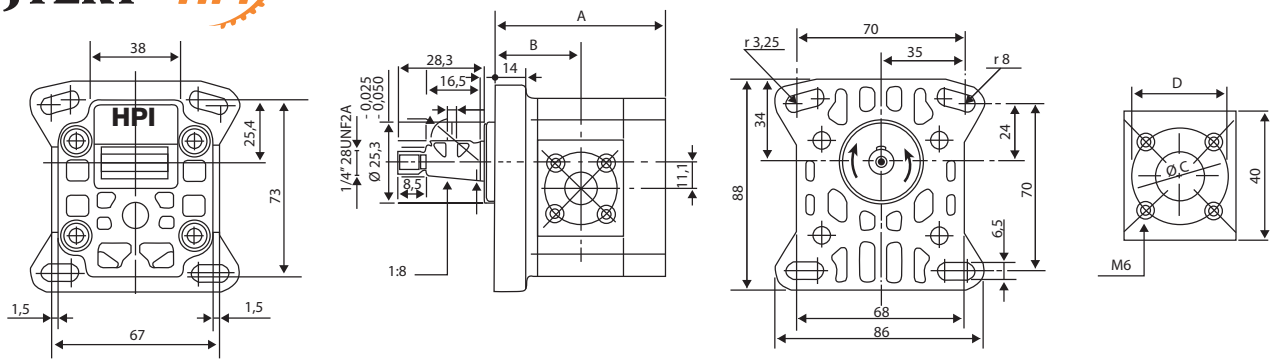

HPI GROUP 2 PUMP
ITALIAN FRONT FLANGE - 1/8 TAPER SHAFT

Displacement (cm³/rev)	Max. working pressure (bar)	Max. speed (rpm)	A	B	Suction			Delivery			Reference
					C	D	E	C	D	E	
4.65	280	3500	123.5	74.5	20	17.4	38	15	17.4	38	P204 . 18HAU
6.45	280	3500	123.5	74.5	20	17.4	38	15	17.4	38	P206 . 18HAU
8.25	280	3500	123.5	74.5	20	17.4	38	15	17.4	38	P208 . 18HAU
10.12	280	3500	123.5	74.5	20	17.4	38	15	17.4	38	P210 . 18HAU
12	280	3500	123.5	74.5	20	17.4	38	15	17.4	38	P212 . 18HAU
15.52	250	3500	138	82	26	47.6	22.4	15	17.4	38	P215 . 18HBU
19.12	200	3500	138	82	26	47.6	22.4	15	17.4	38	P218 . 18HBU
22.87	175	3500	138	82	26	47.6	22.4	15	17.4	38	P222 . 18HBU
27.6	175	3000	154	90	26	47.6	22.4	15	17.4	38	P226 . 18HBU
D = clockwise rotation; S = anti-clockwise rotation											

Specify the desired rotation in your order:
D or S in place of the dot

JTEKT HPI

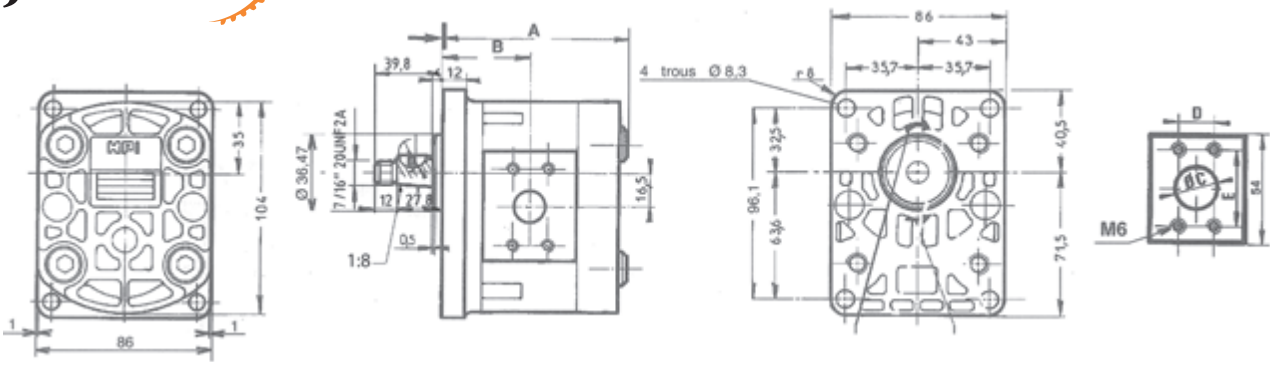

Headquarters: +33 (0)2 51 34 10 10 / UK: +44 (0)1728 684 800

HPI GROUP 2 PUMPS
SAE A FRONT FLANGE - 9-TOOTH SPLINED SHAFT

Displacement (cm³/rev)	Max. working pressure (bar)	Max. speed (rpm)	A	B	Suction			Delivery			Reference
					C	D	E	C	D	E	
4.65	280	3500	92.5	43.5	20	17.4	38	15	17.4	38	P204 . 80HAU
6.45	280	3500	92.5	43.5	20	17.4	38	15	17.4	38	P206 . 80HAU
8.25	280	3500	92.5	43.5	20	17.4	38	15	17.4	38	P208 . 80HAU
10.12	280	3500	92.5	43.5	20	17.4	38	15	17.4	38	P210 . 80HAU
12	280	3500	92.5	43.5	20	17.4	38	15	17.4	38	P212 . 80HAU
15.52	250	3500	107	51	26	47.6	22.4	15	17.4	38	P215 . 80HBU
19.12	200	3500	107	51	26	47.6	22.4	15	17.4	38	P218 . 80HBU
22.87	175	3500	107	51	26	47.6	22.4	15	17.4	38	P222 . 80HBU
27.6	175	3000	123	59	26	47.6	22.4	15	17.4	38	P226 . 80HBU
D = clockwise rotation; S = anti-clockwise rotation											

Specify the desired rotation in your order:
D or S in place of the dot

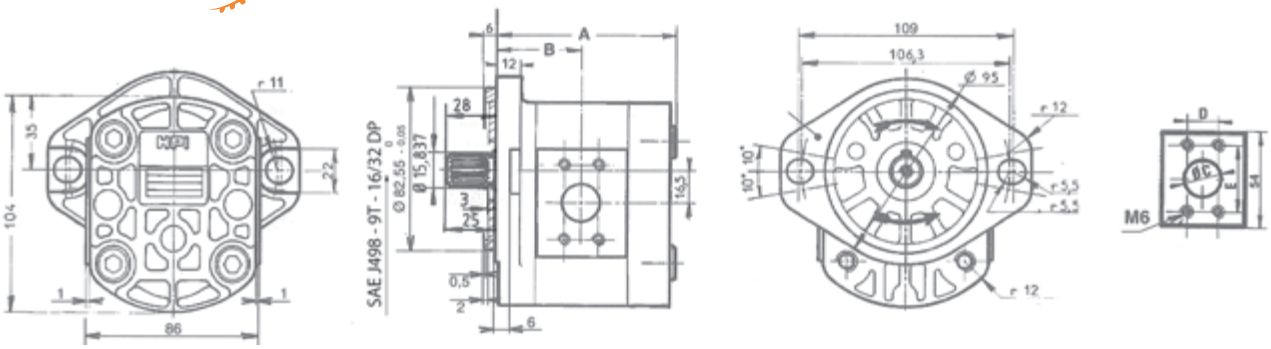

HPI GROUP 2 PUMPS
GERMAN FRONT FLANGE -1/5 TAPER SHAFT

Displacement (cm³/rev)	Max. working pressure (bar)	Max. speed (rpm)	A	B	Suction		Delivery		Reference
					C	D	C	D	
4.65	280	3500	92.5	43.5	20	40	15	35	P204 . 35ABU
6.45	280	3500	92.5	43.5	20	40	15	35	P206 . 35ABU
8.25	280	3500	92.5	43.5	20	40	15	35	P208 . 35ABU
10.12	280	3500	92.5	43.5	20	40	15	35	P210 . 35ABU
12	280	3500	92.5	43.5	20	40	15	35	P212 . 35ABU
15.52	250	3500	107	51	20	40	15	35	P215 . 35ABU
19.12	200	3500	107	51	20	40	15	35	P218 . 35ABU
22.87	175	3500	107	51	20	40	15	35	P222 . 35ABU
27.6	175	3000	123	59	20	40	15	35	P226 . 35ABU
D = clockwise rotation; S = anti-clockwise rotation									

Specify the desired rotation in your order:
D or S in place of the dot

Flanges for pumps See page 183

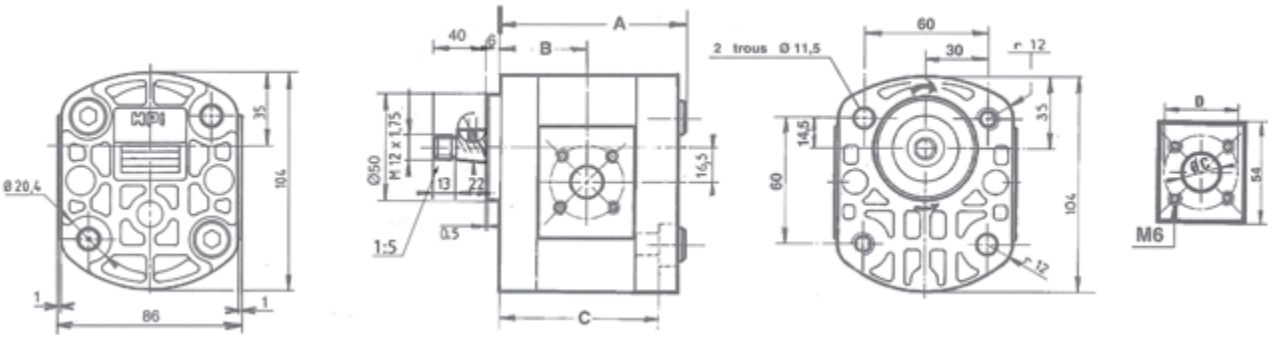

HPI GROUP 2 PUMP
DIN FRONT FLANGE - 1/5 TAPER SHAFT

Displacement (cm³/rev)	Max. working pressure (bar)	Max. speed (rpm)	A	B	Suction			Delivery			Reference
					C	D	E	C	D	E	
4.65	280	3500	123.5	74.5	20	17.4	38	15	17.4	38	P204 . 25HAU
6.45	280	3500	123.5	74.5	20	17.4	38	15	17.4	38	P206 . 25HAU
8.25	280	3500	123.5	74.5	20	17.4	38	15	17.4	38	P208 . 25HAU
10.12	280	3500	123.5	74.5	20	17.4	38	15	17.4	38	P210 . 25HAU
12	280	3500	123.5	74.5	20	17.4	38	15	17.4	38	P212 . 25HAU
15.52	250	3500	138	82	26	47.6	22.4	15	17.4	38	P215 . 25HBU
19.12	200	3500	138	82	26	47.6	22.4	15	17.4	38	P218 . 25HBU
22.87	175	3500	138	82	26	47.6	22.4	15	17.4	38	P222 . 25HBU
27.6	175	3000	154	90	26	47.6	22.4	15	17.4	38	P226 . 25HBU
D = clockwise rotation; S = anti-clockwise rotation											

Specify the desired rotation in your order:
D or S in place of the dot

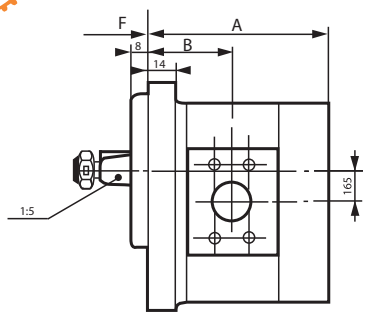

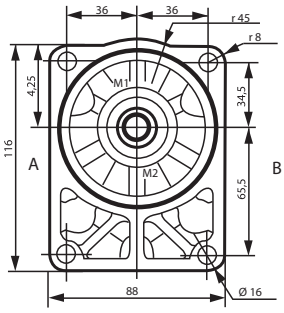

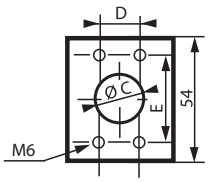

HPI GROUP 3 PUMPS
ITALIAN FRONT FLANGE - 1/8 TAPER SHAFT

Displacement (cm³/rev)	Max. working pressure (bar)	Max. speed (rpm)	A	B	Suction			Delivery			Reference
					C	D	E	C	D	E	
25.8	275	3000	122.7	61.3	28	52.6	26.2	18	52.6	26.6	P325 . 18HDU
32.1	275	3000	122.7	61.3	28	52.6	26.2	18	52.6	26.6	P331 . 18HDU
41.5	275	3000	122.7	61.3	28	52.6	26.2	18	52.6	26.6	P340 . 18HDU
51.65	250	3000	149.2	74.5	42	35.6	69.8	22	35.6	69.8	P350 . 18HEU
62.6	225	2500	149.2	74.5	42	35.6	69.8	22	35.6	69.8	P360 . 18HEU
73.55	225	2500	169.2	84.2	42	35.6	69.8	22	35.6	69.8	P371 . 18HEU
82.95	200	2200	169.2	84.2	42	35.6	69.8	22	35.6	69.8	P380 . 18HEU
92.95	150	2000	169.2	84.2	42	35.6	69.8	22	35.6	69.8	P390 . 18HEU
D = clockwise rotation; S = anti-clockwise rotation											

Specify the desired rotation in your order:
D or S place of the dot

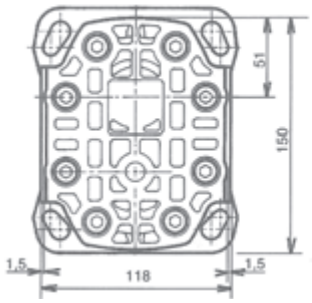

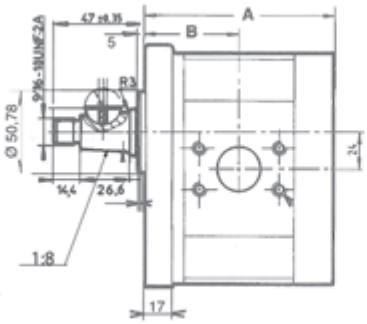

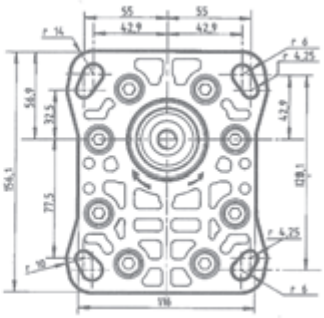

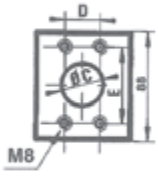

HPI GROUP 3 PUMP
SAE B FRONT FLANGE - 13-TOOTH SPLINED SHAFT

Displacement (cm³/rev)	Max. working pressure (bar)	Max. speed (rpm)	A	B	Suction			Delivery			Reference
					C	D	E	C	D	E	
25.8	275	3000	122.7	61.3	28	52.6	26.2	18	52.6	26.6	**P325 . 93HDU**
32.1	275	3000	122.7	61.3	28	52.6	26.2	18	52.6	26.6	**P331 . 93HDU**
41.5	275	3000	122.7	61.3	28	52.6	26.2	18	52.6	26.6	**P340 . 93HDU**
51.65	250	3000	149.2	74.5	42	35.6	69.8	22	35.6	69.8	**P350 . 93HEU**
62.6	225	2500	149.2	74.5	42	35.6	69.8	22	35.6	69.8	**P360 . 93HEU**
73.55	225	2500	169.2	84.2	42	35.6	69.8	22	35.6	69.8	**P371 . 93HEU**
82.95	200	2200	169.2	84.2	42	35.6	69.8	22	35.6	69.8	**P380 . 93HEU**
92.95	150	2000	169.2	84.2	42	35.6	69.8	22	35.6	69.8	**P390 . 93HEU**
D = clockwise rotation; S = anti-clockwise rotation											

Specify the desired rotation in your order:
D or S in place of the dot

Pumps with higher displacement capacity Contact us

Cast iron pumps Contact us

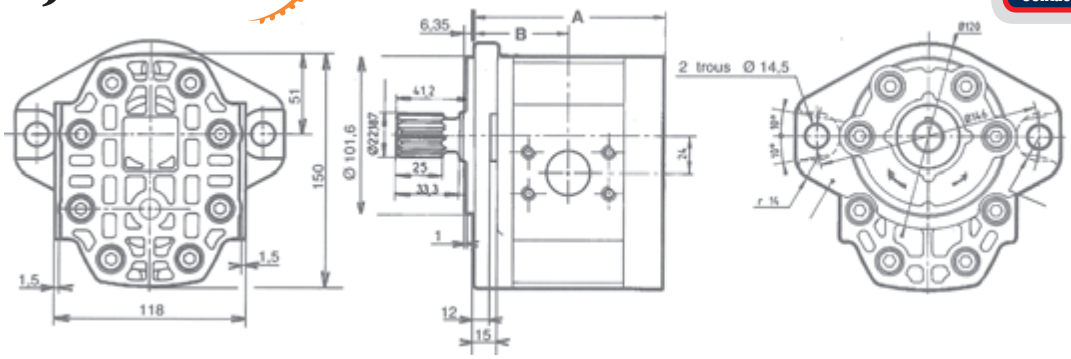

TRUNNION BEARINGS FOR PUMPS
GR 2 AND 3 - HPI-SPECIFIC

Name	Front flange centring Ø	Fastening distance	2 holes	4 holes	Shaft type	Shaft Ø (mm)	Number of teeth	Reference	Item
Type of truck	80	80 x 80	-	X	Splined	34.85	8	**PHCPCC**	1
SAE A for Group 3	82.5	106.3	X	-	Splined, SAE B	22.22	13	**PHCP83**	2
SAE B	101.6	146 4 x Ø 127	X	X	Splined, SAE B	22.22	13	**PHCP93**	3
SAE B	101.6	146 4 x Ø 127	X	X	Splined, SAE BB	25.39	15	**PHCP92**	4
SAE B	101.6	146 4 x Ø 127	X	X	Splined, SAE C	31.71	14	**PHCPB0**	5
SAE B	101.6	146 4 x Ø 127	X	X	Cylindrical, SAE B	22.22	-	**PHCP94**	6
SAE B	101.6	146 4 x Ø 127	X	X	Cylindrical, SAE BB	25.4	-	**PHCPB1**	7
SAE B	101.6	146 4 x Ø 127	X	X	Cylindrical, SAE C	31.75	-	**PHCP9A**	8
SAE C	127	4 x 161.9	-	X	Splined, SAE B	22.22	13	**PHCPR3**	9
SAE C	127	4 x 161.9	-	X	Splined, SAE C	31.71	14	**PHCPR0**	10
SAE C	127	4 x 161.9	-	X	Cylindrical, SAE BB	25.4	-	**PHCPR1**	11
SAE C	127	4 x 161.9	-	X	Cylindrical, SAE C	31.75	-	**PHCPRA**	12
SAE A	82.5	106.3	X	-	Cylindrical	25.4		**PHCP81**	
SAE A	82.5	106.3	X	-	Cylindrical	22.2		**PHCP84**	

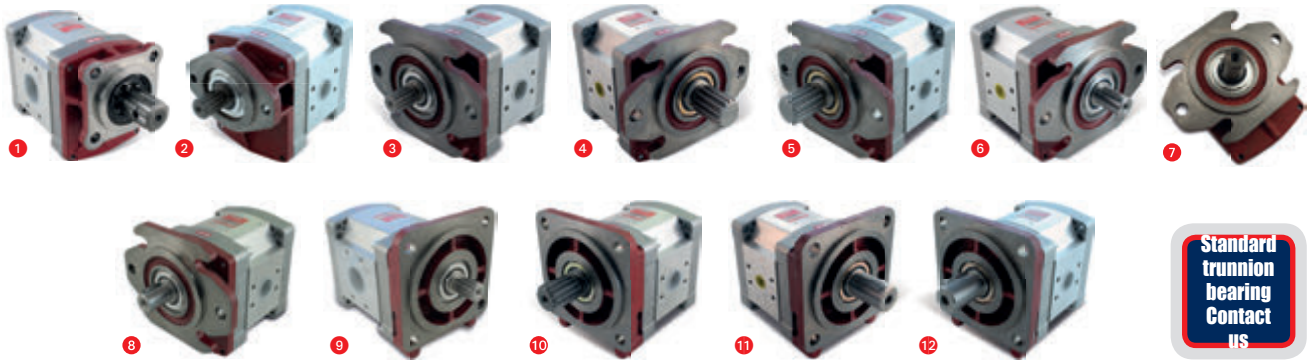

Standard trunnion bearing Contact us

DEFINITION GUIDE: GEAR PUMPS

PHOTOCOPY AND FAX THIS PAGE TO + 33 (0)2 51 34 12 66 (headquarters) or +44 (0) 1728 684 808 (UK)

To avoid errors during ordering, component returns or exchanges, and to ensure better customer service, we recommend that your fill out the following information:

TYPE

Type of machine:.....

.....

Pump make: .....

.....

Engraved reference: .....

.....

PUMP

☐ Single
☐ Double
☐ Triple
☐ Other:

.....

DIRECTION OF ROTATION

Shaft facing you

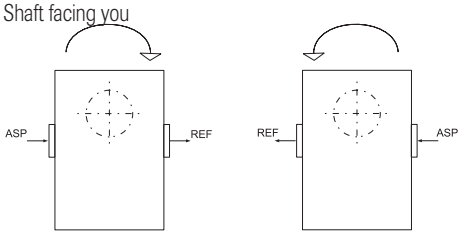

☐ Clockwise rotation ☐ Anti-clockwise rotation

SHAFT

Taper: Ø large cone:.....(mm)
Ø small cone:.....(mm)

Cylindrical: Shaft Ø: .....(mm)

Splined: Number of teeth: .....
Shaft Ø: .....(mm)

MATERIAL

☐ Aluminium

☐ Cast iron

DISPLACEMENT

In cm³/rev:.....

Remember, the displacement capacity calculation is:

Displacement = 3.14 x D x W x H

See explanation on page 77
values in cm

FRONT FLANGE

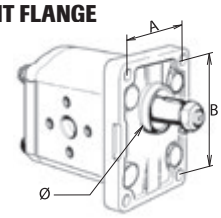

☐ A: .....(mm)
B: .....(mm)
Centring Ø: .....(mm)

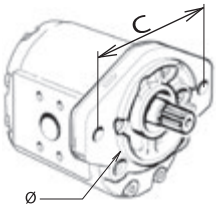

☐ C: .....(mm)
Centring Ø: .....(mm)

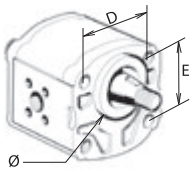

☐ D: .....(mm)
E: .....(mm)
Centring Ø: .....(mm)

SUCTION (IN) AND DELIVERY (OUT) FLANGES

☐ Threaded
IN F: .....(mm)
REF. F: .....(mm)

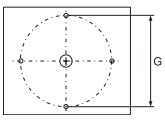

☐ Diamond
IN G: .....(mm)
REF. G: .....(mm)

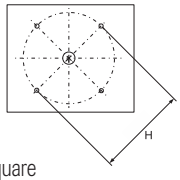

☐ Square
IN H: .....(mm)
REF. H: .....(mm)

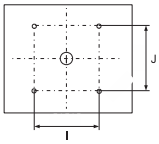

☐ Rectangle
IN I: .....(mm)
REF. I: .....(mm)
IN J: .....(mm)
REF. J: .....(mm)

In the case of multiple pumps, specify the number of suction elements:

HydrokiT
HYDRAULIC GLOBAL SOLUTIONS

Rue du Bocage - La Ribotière
85170 LE POIRÉ-SUR-VIE
France

Tel.: + 33 (0)2 51 34 10 10
Fax: + 33 (0)2 51 34 12 66
e-mail: info@hydrokit.com

COMPANY

Company: .....

.....

Contact person: .....

Phone: .....

Fax: .....

Stamp:

FLEXIBLE COUPLINGS

Group	H	A	d	D	Reference
2	87	65	1/8	24	**ND10**
2	97	65	1/8	28	**ND13**
2	135	86	1/8	38	**ND16**
3	135	86	1/8	38	**ND17**
2	168	108	1/8	42	**ND284**
3	168	108	1/8	42	**ND286**

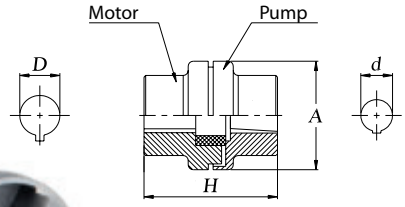

BELL HOUSINGS

Group	A	B	C	N	M	E	Reference
2	200	165	130	71.5	96	36.5	**LA203**
2	250	215	180	71.5	96	36.5	**LA252**
2	300	265	230	71.5	96	36.5	**LA300**
3	300	265	230	98.5	128	50.8	**LA302**

Electric motors Contact us

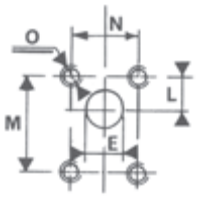

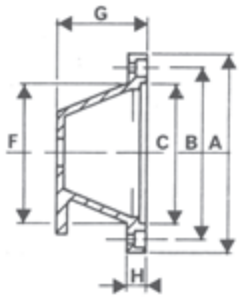

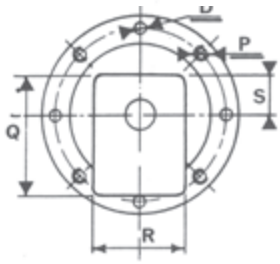

CLUTCHES FOR PUMPS GROUP 2 AND GROUP 3

Agricultural vehicle, trucks, construction machines, marine.
The clutches are designed to drive group 2 and 3 hydraulic pumps.

- **Easy to operate:** with a mechanically controlled clutch.
- **Convenient:** electrically controlled clutch.
- **Practical:** the hydraulic circuit only functions on demand.

For Italian standard gear pump	Electromagnetically controlled clutch 1					Manually controlled clutch 2				
	Voltage (V)	Power (W)	2SPA13 pulley Ø	Torque (daN.m)	Reference	Shaft Ø (mm)	Max. axial load (daN)	Max. speed	Torque (daN.m)	Reference *
GR2	12	40	153	10	**EE100B012B (1)**	20	120	2000	9	**EM050 (3)**
GR2	24	30	153	10	**EE100B024B (1)**	28	160	2700	18.5	**EM100 (1)**
GR3	12	40	178	14	**EE200B012B (2)**	28	160	2700	18.5	**EM100 (4)**
GR3	24	30	178	14	**EE200B024B (2)**	42	260	2700	58	**EM200 (5)**

* Available in clockwise rotation or anti-clockwise rotation: add "D" or "G" to the end of the reference.

(1) See MC32 sleeve
(2) See MC3 sleeve
+ IM2FP3 front flange
(3) See MC2 sleeve
This model is also Group 1
(4) See MC3 sleeve
(5) See IM2M3 sleeve
+ EM200FP3 front flange

BEARING SUPPORTS

❶ Cylindrical shaft Ø 18 centring Ø 50.80 mm

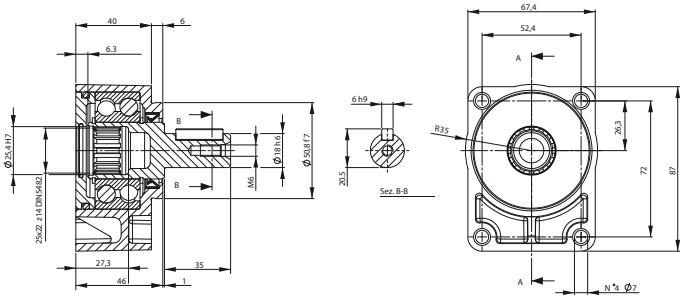

❹ Taper shaft 1/5 centring Ø 80 mm

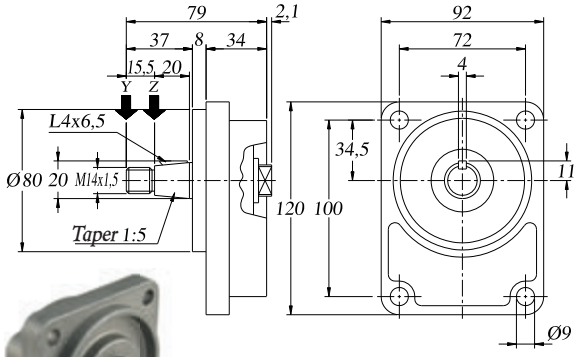

❷ Cylindrical shaft Ø 22 centring Ø 50.7 mm

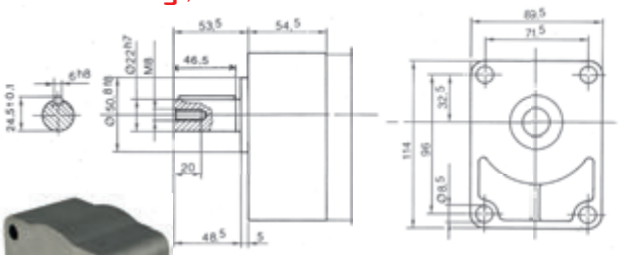

Delivered with coupling

❺ Cylindrical shaft Ø 26 F6 centring Ø 50.7 mm

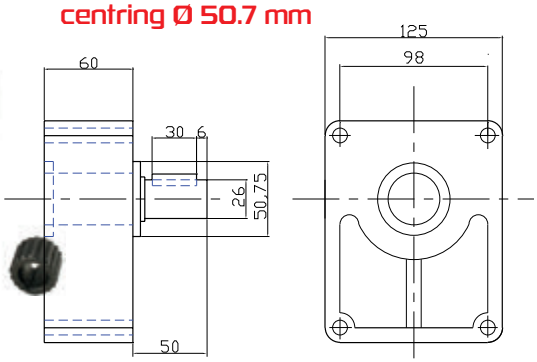

❸ Taper shaft 1/8 (Ø 17.5) centring Ø 50.7 mm

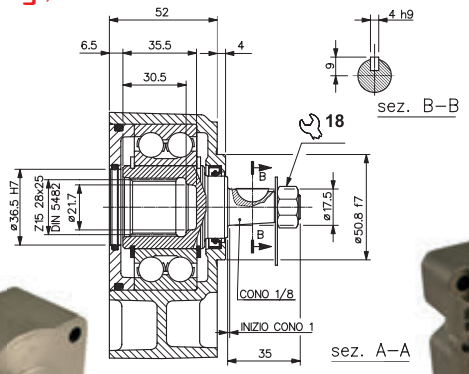

❻ Taper shaft 1/8 centring Ø 50.7 mm

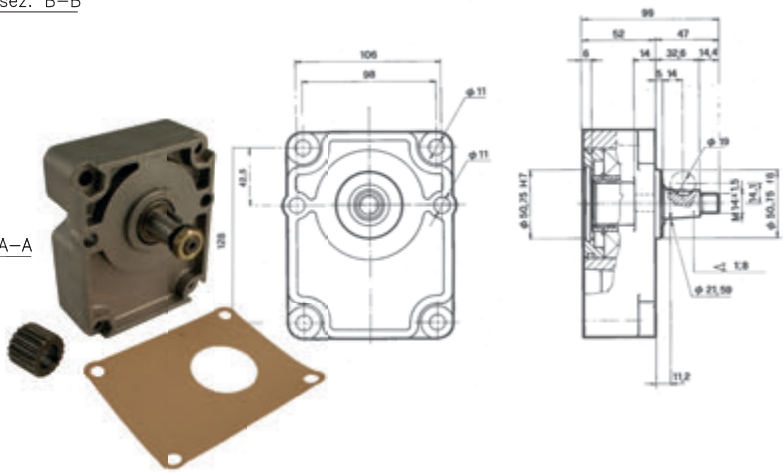

Group	Shaft	Item	Reference with sleeve	Sleeve only, splined	Pump type
1	Cylindrical Ø 18	❶	**CP10**	**MCP1**	GR1 Italian shaft and front flange
2	Cylindrical Ø 22	❷	**CP20**	**MCP2**	GR2 Italian shaft and front flange
2	1/8 taper	❸	**CP20K**	**MCP2**	GR2 Italian shaft and front flange
2	1/5 taper	❹	**CP5280**	**-**	German front flange, screwdriver shaft
3	Cylindrical Ø 26	❺	**CP3026***	**MC3**	GR3 Italian shaft and front flange
3	1/8 taper	❻	**CP30K18**	**MC3**	GR3 Italian shaft and front flange
3	Cylindrical Ø 45		**CP9G45**	**-**	2-hole SAE B front flange and 15-tooth SAE BB splined shaft
* Option complete kit including weld-on plate + PTO shaft 1"3/8 : CP3026K1					

PUMPS WITH G2 AND G3 MULTIPLIER GEARBOXES

- Just one reference for a complete assembly.
- Hydrokit pump.

Application

- Assembly - pump with multiplier gearbox on the tractor PTO (540 rpm), male or female.

Composition

- Multiplier gearbox ratio 1:3.3.
- Pump.
- Suction and delivery flanges.
- Paper seal.
- Coupling sleeve.
- Pump fastening screw.

Option 1000 rpm: contact us

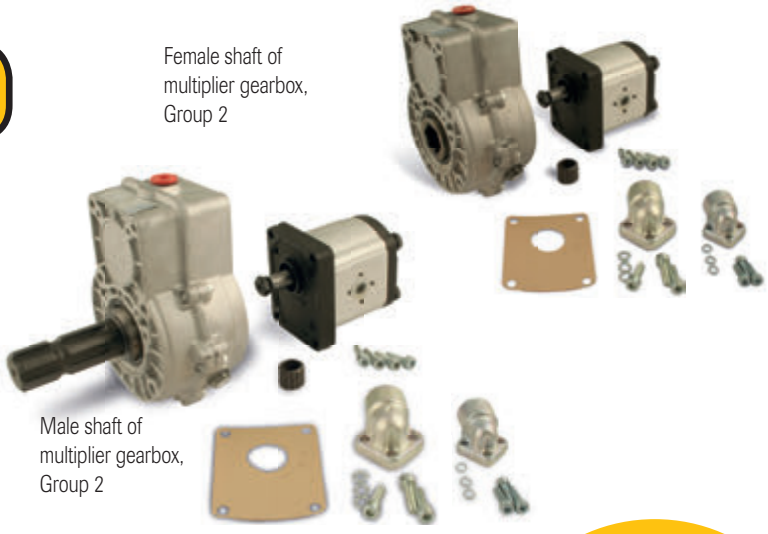

Female shaft of multiplier gearbox, Group 2

Male shaft of multiplier gearbox, Group 2

Group	Flow rate at 1890 rpm (l/min)	Displacement (cm^3/rev)	Max. pressure (bar)	Absorbed power at 100 b (hp)	Reference for multiplier gearbox with male shaft	Reference for multiplier gearbox with female shaft	Reference for multiplier gearbox with female shaft with lock	Suction union, threaded, elbow	Delivery union, threaded, elbow
Group 2	21	11	250	5.3	**MMS35F211D**	**MFS35F211D**	**MFS35F211DV**	1/2" BSP	3/8" BSP
Group 2	26	14	250	6.7	**MMS35F214D**	**MFS35F214D**	**MFS35F214DV**	3/4 " BSP	1/2" BSP
Group 2	36	19	200	9.1	**MMS35F219D**	**MFS35F219D**	**MFS35F219DV**	3/4" BSP	1/2" BSP
Group 2	41	22	200	10.5	**MMS35F222D**	**MFS35F222D**	**MFS35F222DV**	3/4" BSP	1/2" BSP
Group 3	47	25	250	11.9	**MMS35F325D**	**MFS35F325D**	**MFS35F325DV**	3/4" BSP	3/4" BSP
Group 3	60	32	250	15.3	**MMS35F332D**	**MFS35F332D**	**MFS35F332DV**	1" BSP	3/4" BSP
Group 3	79	42	230	20	**MMS35F342D**	**MFS35F342D**	**MFS35F342DV**	1" BSP	3/4" BSP
Group 3	87	46	230	21.9	**MMS35F346D**	**MFS35F346D**	**MFS35F346DV**	1" BSP	3/4" BSP
Group 3	104	55	200	26.2	**MMS35F355D**	**MFS35F355D**	**MFS35F355DV**	1" BSP	3/4" BSP

Standard fastening bracket 300x200 for group 2 and 3 gearboxes : ref : 71013771

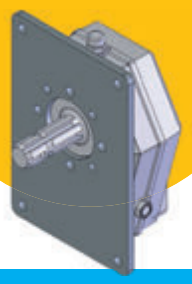

ALUMINIUM MULTIPLIER GEARBOXES FOR PUMPS WITH ITALIAN SHAFT AND FRONT FLANGE

Category	1" 3/8 PTO input/output	Number of outputs	Reference for full kit	Reference for multiplier gearbox only	Sleeve reference	Paper seal reference	Speed reduction gear ratio	Max. torque at inlet (daN.m)	Max. power at inlet (kW)	Item
Group 2	Male	1	**MUL20M35**	**ML32M35**	**MC2**	**JPF201**	1 / 3.35	18.6	10.3	1
Group 2	Female	1	**MUL20F35**	**ML32F35**	**MC2**	**JPF201**	1 / 3.35	18.6	10.3	2

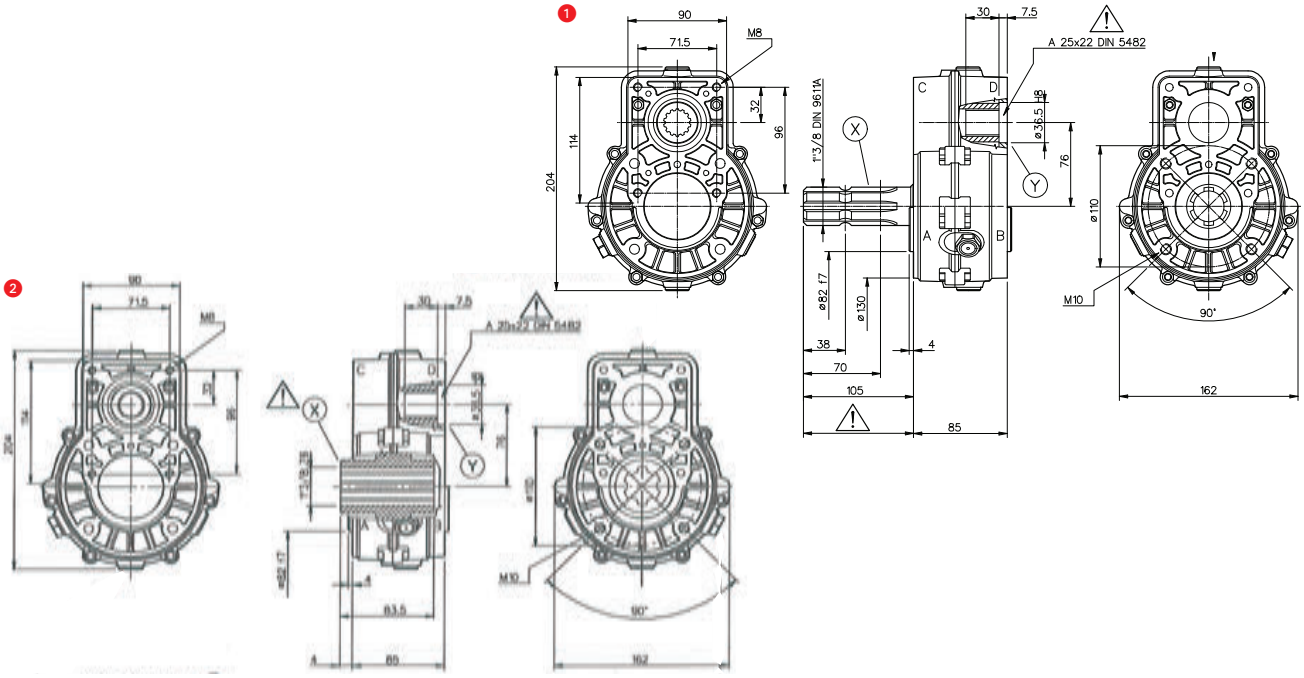

ALUMINIUM MULTIPLIER GEARBOXES FOR PUMPS WITH ITALIAN SHAFT AND FRONT FLANGE (CONT.)

Category	1" 3/8 PTO input/output	Number of outputs	Reference for full kit	Reference for multiplier gearbox only	Sleeve reference	Paper seal reference	Speed reduction gear ratio	Max. torque at inlet (daN.m)	Max. power at inlet (kW)	Item
Group 2	Female with coupling	1		**ML32F33A**	**MC2**	**JPF201**	1 / 3.35	18.6	10.3	3
Group 2	Male	1	-	**ML52M35**	**MC32**	**JPF201**	1 / 3.5	46	20	4
Group 3			**MUL30M35**	**ML52M35**	**MC3**	**JPF301**				
Group 2	Female	1	-	**ML52F35**	**MC32**	**JPF201**	1 / 3.5	46	20	4
Group 3			**MUL30F35**	**ML52F35**	**MC3**	**JPF301**				
Group 2	Male	2		**B502**	**MC32 x2**	**JPF201 x2**	1 / 3.5	90.4	35	5
Group 3					**MC3 x2**	**JPF301 x2**				
Group 2	Female with coupling	1		**ML52F35AA**	**MC32**	**JPF201**	1 / 3.5	46	20	4
Group 3					**MC3**	**JPF301**				
Group 2	Male / Male	1		**ML52M35M**	**MC32**	**JPF201**	1 / 3.5	46	20	6
Group 3					**MC3**	**JPF301**				
Group 2	Female / Female	1		**ML52F35F**	**MC32**	**JPF201**	1 / 3.5	46	20	6
Group 3					**MC3**	**JPF301**				

3

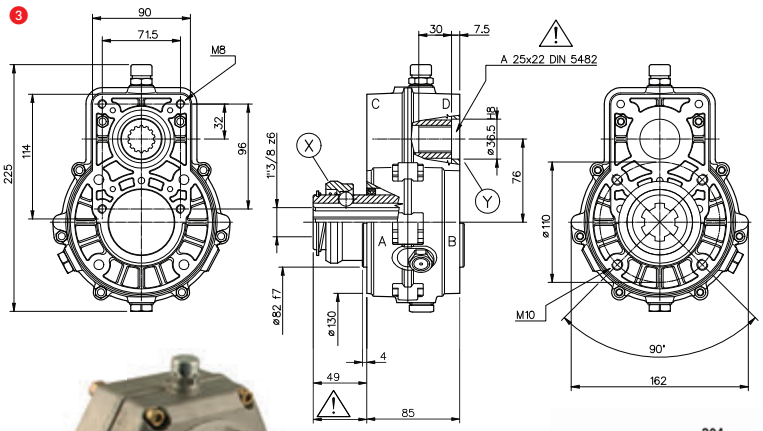

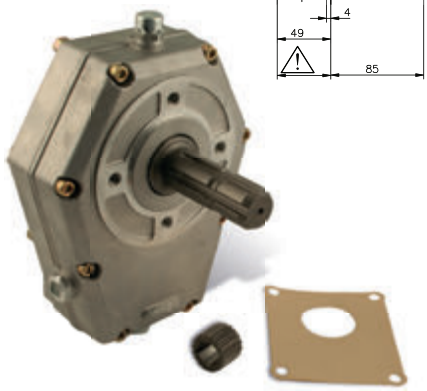

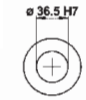

Adjusting ring for group 2 pump

920266

4

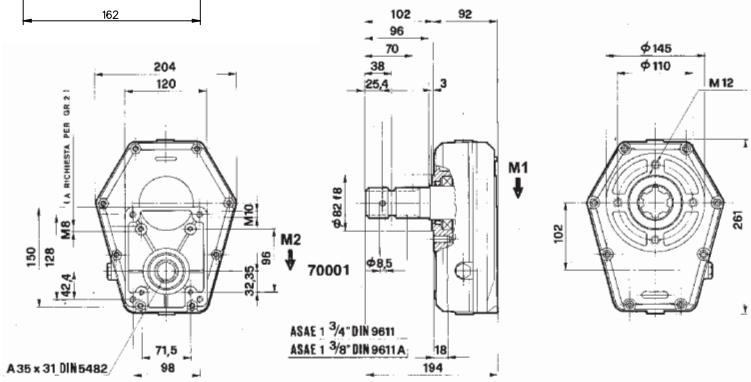

5

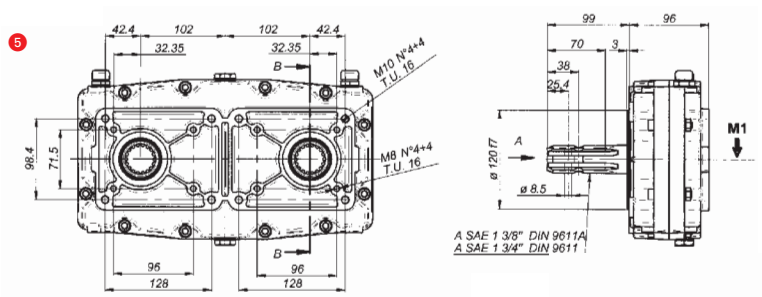

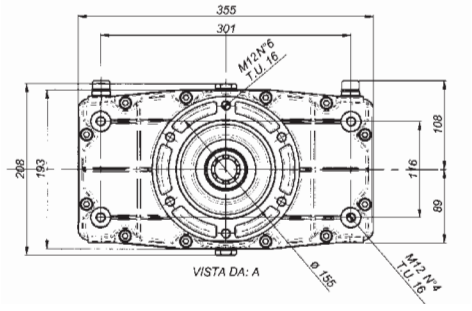

6

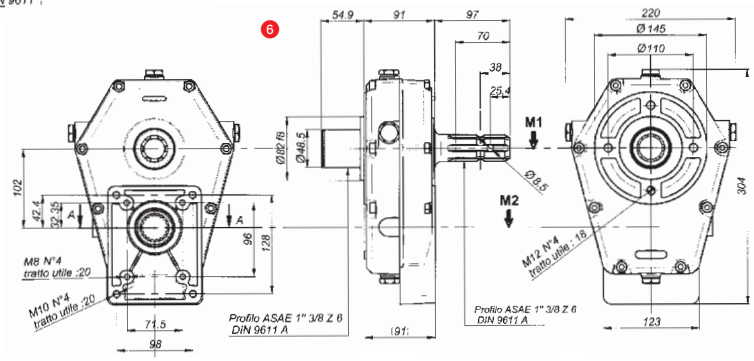

Headquarters: +33 (0)2 51 34 10 10 / UK: +44 (0)1728 684 800

GEAR PUMPS FOR TRUCKS

- Maximum speed 3000 rpm (except for 102 cm³/rev displacement, which is limited to 2500 rpm).

Displ. (cm³/rev)	Continuous pressure (bar)	Peak pressure (bar)	Max. speed (rpm)	Mounting		Anti-clockwise rotation reference	Clockwise rotation reference
				In	Out		
15	315	340	3000	3/4"	3/4"	**PCG315SUGA**	**PCG315DUGA**
22	305	330		3/4"	3/4"	**PCG322SUGA**	**PCG322DUGA**
36	300	325		3/4"	3/4"	**PCG336SUGA**	**PCG336DUGA**
43	280	305		1"	1"	**PCG343SUGA**	**PCG343DUGA**
57	260	285		1"	1"	**PCG355SUGA**	**PCG355DUGA**
65	240	265		1"	1"	**PCG365SUGA**	**PCG365DUGA**
75	220	240		1"	1"	**PCG375SUGA**	**PCG375DUGA**
83	210	230		1"	1"	**PCG380SUGA**	**PCG380DUGA**
102	180	200	2500	1"	1"	**PCG102SUGA**	**PCG102DUGA**
Available in axial version or bent axis version. Contact us.							

Application

- Tipping

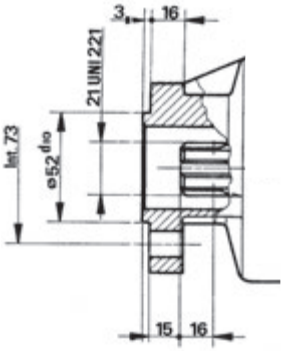

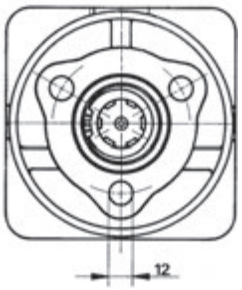

PISTON PUMPS FOR TRUCKS

- Bidirectional.

Displ. (cm³/rev)	Continuous pressure (bar)	Peak pressure (bar)	Max. speed (rpm)	Mounting		Reference
				In	Out	
19	350	400	1800	1" 1/4	1"	**PCP319BCCA**
25	350	400	1800	1" 1/4	1"	**PCP325BCCA**
37	350	400	1800	1" 1/4	1"	**PCP337BCCA**
50	350	400	1800	1" 1/4	1"	**PCP350BCCU**
60	300	350	1700	1" 1/4	1"	**PCP360BCCA**
80	300	350	1600	1" 1/2	1"	**PCP380BCCA**
90	300	350	1600	2"	3/4	**PCP390BCCL**
100	300	350	1600	1" 1/2	1" 1/2	**PCP700BCCA**
Available in axial version. Contact us.						

Application

- Vacuum pump

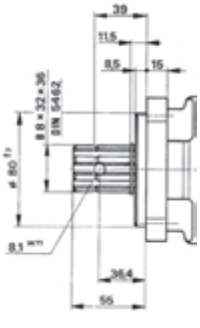

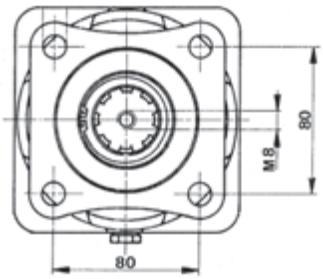

BENT AXIS PISTON PUMPS FOR TRUCKS

- Minimal dimensions.
- High speed rotation.
- High pressure delivery.

Displ. (cm³/rev)	Continuous pressure (bar)	Peak pressure (bar)	Max. speed (rpm)	Mounting		Max. absorbed torque at 350 bar (N.m)	Reference
				In	Out		
12	350	400	3150	Flat ø 38	3/4	71	**PCP312BCCL1**
18	350	400	2900	Flat ø 38	3/4	107	**PCP318BCCL1**
25	350	400	2750	Flat ø 38	3/4	148	**PCP325BCCL1**
32	350	400	2700	Flat ø 38	3/4	190	**PCP332BCCL1**
41	350	400	2550	Flat ø 50	3/4	243	**PCP341BCCL1**
50.3	350	400	2450	Flat ø 50	3/4	292	**PCP351BCCL1**
63	350	400	2300	Flat ø 50	3/4	362	**PCP361BCCL1**
80.4	350	400	2150	Flat ø 50	1"	460	**PCP381BCCL1**
108.3	350	400	1900	Flat ø 63	1"	619	**PCP108BCCL1**
129.8	350	400	1750	Flat ø 63	1"	730	**PCP130BCCL1**

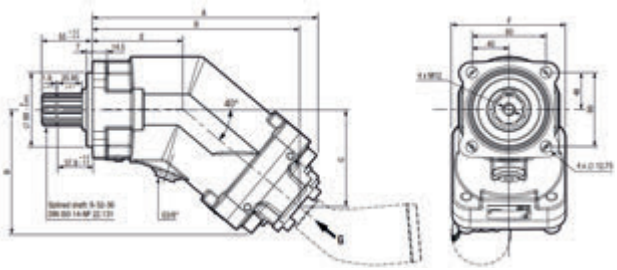

DANFOSS VARIABLE DISPLACEMENT PISTON PUMP FOR CLOSED CIRCUIT FROM 42 TO 250 CM³/REV

Displ. (cm³/rev)	Max. continuous pressure (bar)	Max. peak pressure (bar)	Max. continuous speed (rpm)	Max. peak speed (rpm)	Torque N.m/ bar	Weight (kg)	Mountings					
							A, B	S	M1, M2, M3	M4	M5	L1, L2
42	420	450	4200	4600	0.67	34	3/4 6000 psi 3/8 16UNC screw	1" 1/16 12UN	9/16 18UNF	9/16 18UNF	9/16 18UNF	7/8 14UNF
55	420	450	3900	4250	0.88	40	1" 6000 psi 7/16 14UNC screw	1" 5/16 12UN	9/16 18UNF	7/16 20UNF	7/16 18UNF	1" 1/16 12UN
75	420	450	3600	3950	1.19	49	1" 6000 psi 7/16 14UNC screw	1" 5/16 12UN	9/16 18UNF	9/16 18UNF	9/16 18UNF	1" 1/16 12UN
100	420	450	3300	3650	1.59	68	1" 6000 psi 7/16 14UNC screw	1" 5/8 12UN	9/16 18UNF	9/16 18UNF	9/16 18UNF	1" 1/16 12UN
130	420	450	3100	3400	2.07	88	1" 1/4 6000 psi 1/2 13UNC screw	1" 5/8 12UN	9/16 18UNF	9/16 18UNF	9/16 18UNF	1" 5/16 12UN
180	420	450	2600	2850	2.87	136	1" 1/4 6000 psi 1/2 13UNC screw	1" 5/8 12UN	9/16 18UNF	9/16 18UNF	9/16 18UNF	1" 5/8 12UN
250	420	450	2300	2500	3.97	154	1" 1/2 6000 psi 5/8 11UNC screw	1" 1/2 3000 psi	9/16 18UNF	9/16 18UNF	9/16 18UNF	1" 5/8 12UN

Type of control

- Manual control.
- Hydraulic control.
- On/off 12 V or 24 V electric control.
- 12 V or 24 V proportional electric control.

Options

- Predisposed rear cover.
- Suction filter or pressure boost.
- Anti-shock valves.
- Speed sensor.

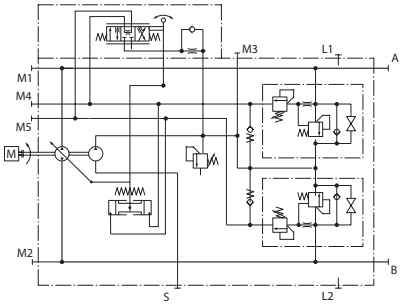

S: Suction
A and B: High pressure outlets
L1 and L2: Drain
M1 and M2: HP pressure outlet
M3: Boost pressure outlet
M4 and M5: Servo control pressure outlet

DANFOSS 45 SERIES PISTON PUMPS WITH VARIABLE FLOW RATE FOR OPEN CIRCUIT

Specifications

- Rated pressure: 210 to 310 bar.
- Max. pressure: 350 to 400 bar.

CALIBRE	L		K		J					E		
Displacement (cm³)	25	30	38	45	45	51	60	65	75	100	130	147
Flow rate at max. N (l/min)	80	96	100.7	119.3	126	137.7	156	162.6	180	245	286	308.7
Continuous speed (rpm)	3200	3200	2650	2650	2800	2700	2600	2500	2400	2450	2200	2100
Max. speed (rpm)	3600	3600	2800	2800	3360	3240	3120	3000	2880	2880	2600	2475
Minimum speed (rpm)	500	500	500	500	500	500	500	500	500	500	500	500
Continuous pressure (bar)	260	210	260	210	310	310	310	260	260	310	310	260
Max. pressure (bar)	350	300	350	300	400	400	400	350	350	400	400	350
Front flange	X	X	X	X	X –	X –	X –	X –	X –	–	–	–

Flange X: SAEB 2 holes
Flange -: SAEB 4 holes

K/L series

J series

E series

SINGLE-ACTING MANUAL PUMPS

Reservoir capacity	A	B	C	D	Reference 12 cm³ 300 bar	Reference 16 cm³ 320 bar	Reference 25 cm³ 150 bar
2-litre reservoir*	135	160	30	90	**P2M12S2F**	**P2M16S2F**	**P2M25S2F**
3-litre reservoir	165	160	40	90	**P2M12S3F**	**P2M16S3F**	**P2M25S3F**
5-litre reservoir	215	185	53	106	**P2M12S5F**	**P2M16S5F**	**P2M25S5F**
7-litre reservoir	245	205	53	120	**P2M12S7F**	**P2M16S7F**	**P2M25S7F**
*Attention - there is no drain plug on the 2-litre models.							

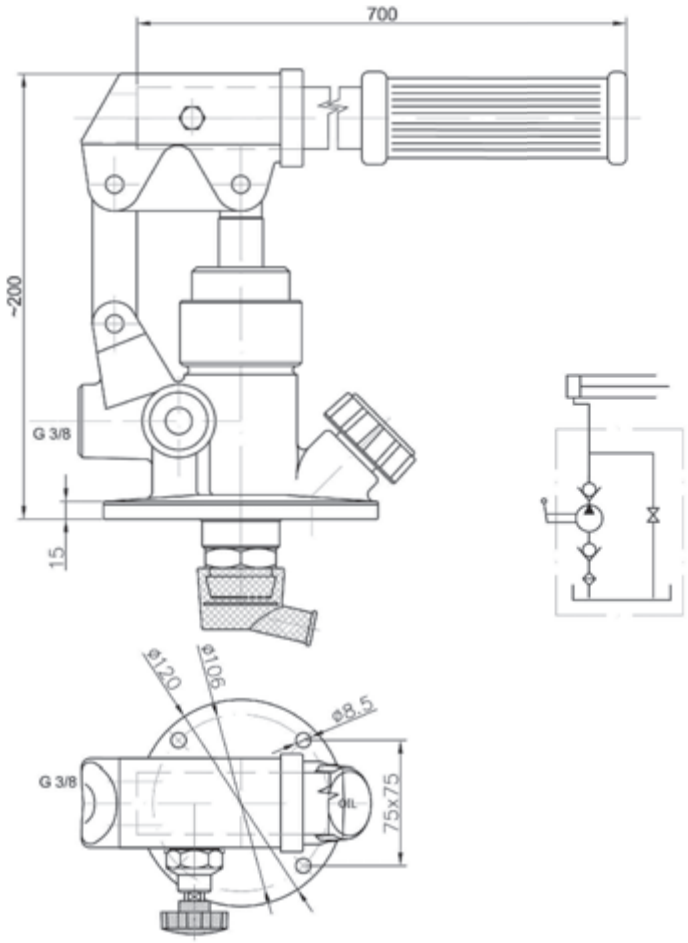

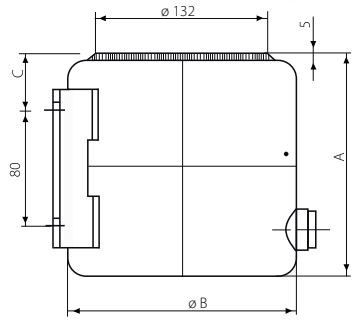

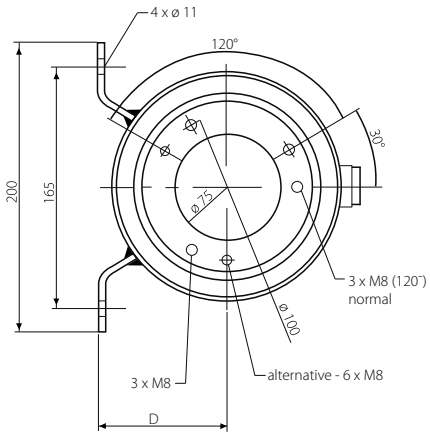

IN-LINE MANUAL PUMPS SINGLE-ACTING OR DOUBLE-ACTING

- Compact pump.
- Raised pressure, 300 bar.
- Pumps delivered with lever.

Item	Displacement (cm³)	Max. suction (mm)	Max. pressure (bar)	Mounting		Reference
				Suction	Delivery	
1	20	0.7	300	1/2	3/8	**PM20SENNA1**
2	50	0.7	250	1/2	1/2	**PM50SENNA1**

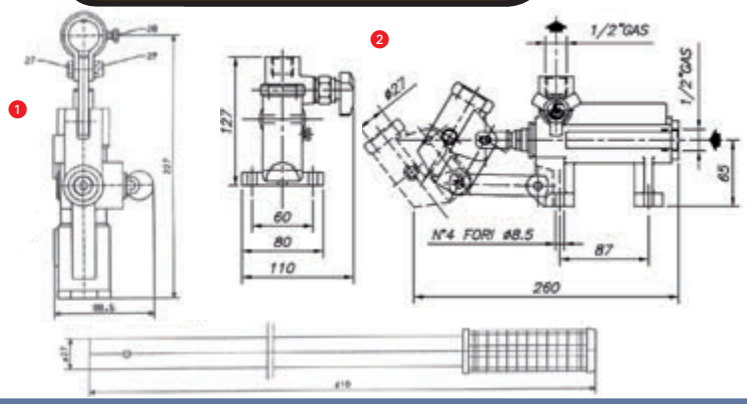

DOUBLE-ACTING MANUAL PUMPS

Reservoir capacity	A	B	D	E	L	Weight (kg)	M	Reference 12 cm³ 320 bar	Reference 25 cm³ 320 bar
1-litre reservoir	Without	120	150	100	120	2	15	**P2M12D1F**	**P2M25D1F**
2-litre reservoir	Without	120	150	100	180	2,2	15	**P2M12D2F**	**P2M25D2F**
3-litre reservoir	1/4 BSP	120	150	100	250	2,5	15	**P2M12D3F**	**P2M25D3F**
5-litre reservoir	3/8 BSP	195	175	175	190	4,5	20	**P2M12D5F**	**P2M25D5F**
7-litre reservoir	3/8 BSP	195	175	175	270	5,4	20	**P2M12D7F**	**P2M25D7F**

Pump delivered with 2 male unions BSP1/4 - BSP3/8

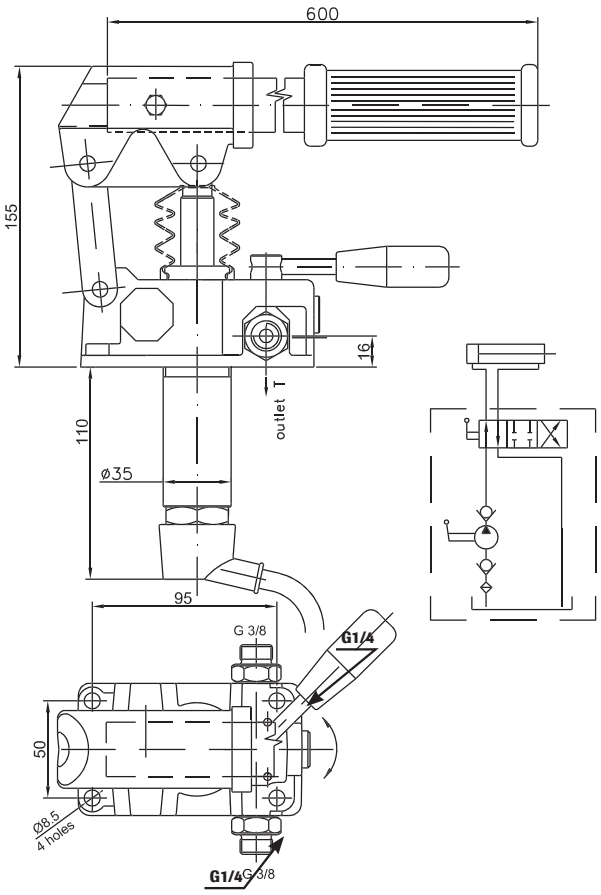

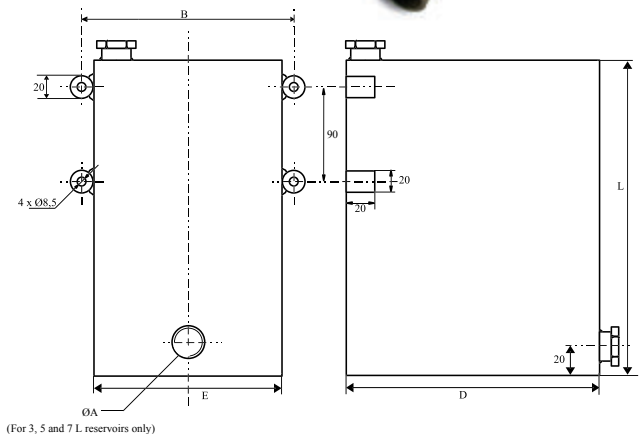

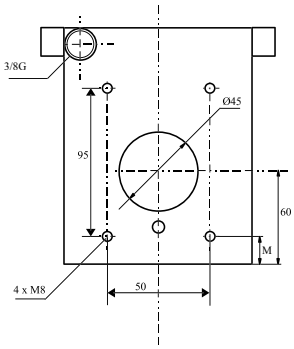

HYDRO-PNEUMATIC PUMPS

- Hydraulic removal unit, workshop press, extraction equipment.

Description	Max. pressure stages (bar)	Volume displaced by lever stroke (cm³)	Reservoir capacity (cm³)	Weight (kg)	Reference
Foot-controlled one speed pump	350	2.62	496	6.75	**APPH2Q001E**
Hydro-pneumatic (2.8 to 7 bar)	350	160 to 1200 (according to pressure)	600	7.7	**PHP1V350**
Mounting 3/8 NPTF					

MANUAL PUMPS UP TO 700 BAR

- Compact pump for pressure up to 700 bar.
- High flow rate, pump with two automatic speeds.

- Hydraulic removal unit, workshop press, extraction equipment.

Description	Max. pressure stages (bar)	Volume displaced by lever stroke (cm³)	Reservoir capacity (cm³)	Weight (kg)	Reference
Manual gear lever one speed pump	700	2.62	901	6.75	**PMS1V26**
Manual gear lever 2 speeds pump	1 stage: 27 2 stages 700	10.65 2.62	2493	11.25	**PMS2V10626**
Mounting 3/8 NPTF					

HYDRAULIC POWER UNITS, MODULAR, 1 TO 3 INDEPENDENT FLOW RATES

- Custom unit: several independent flow rates and integrated distribution.
- Ergonomic: electric remote control.
- Practical: activation of two different implements.
- Complete availability of the tractor's hydraulic functions.

Drive of several implements.

Customised unit Contact us

Applications

- Operates a wide selection of equipment example mower, turbine drive and allows the simultaneous use of front and rear mounted implements.

Electric control	Flow rate (l/min)	Cooler	3-point mounting	Reference
No	1x31	No	No	**GHV135R80**
No	1x40	No	No	**GHV140**
No	1x49	No	No	**GHV150**
No	1x62	No	No	**GHV165**
No	1x90	No	No	**GHV190**
Yes	2x27	No	No	**GHV225**
Yes	2x31	No	No	**GHV230**
Yes	2x41	No	No	**GHV240**
No	1x40	No	Yes	**GHV140A**
No	2x31	No	Yes	**GHV230A**
No	3x20	No	Yes	**GHV320A**
Yes	1x40	No	Yes	**GHV140AS12**
Yes	2x31	No	Yes	**GHV230AS12**
Yes	3x20	No	Yes	**GHV320AS12**
Yes	2x31	Yes	Yes	**GHV230AS12RHB30**
Yes	3x20	Yes	Yes	**GHV320AS12RHB30**

Specifications

- PTO drive.
- Multiplier gearbox with single, double or triple pump.
- Female push / pull coupler for pressure / return.
- Filtration.
- Manual or electrical distribution.
- 80-litre reservoir.
- Ventilated cooler as an option.
- Dimensions: L x W x H = 693 mm x 570 mm x 983 to 1390 mm.
- Matt black paint finish.

TRUCK TIPPING BODY UNITS GH10

Autonomous supply of a single-acting cylinder (e.g.: dump truck).

Applications

- For loading ramps, tailgate or dump trailer on commercial vehicle or truck.
- Hydraulic unit with DC electric motor and remote control via an external box.
- Easy and economical adaptation.
- Functions with single-acting cylinders.

Voltage	Reference with protective hood
12	**GH10RDC12CLH**
24	**GH10RDC24CLH**

Composition

A compact hydraulic unit, including:

- Electric motor delivered with wired start relay and protective cover (12 V - 1,6 kW or 24 V - 2.2 kW).
- Sheet metal mounting plate.
- 8 l translucent plastic reservoir (no corrosion, fill level is visible from the outside).
- Adjustable pressure relief valve (90 to 200 bar).
- 1.6 cm^3/rev displacement pump.
- Lowering solenoid valve 12 V or 24 V, 3/8"BSP outlet.
- Lift / lower control box.

HYDRAULIC POWER PACKS, STANDARD VERSION

Application examples

- Log splitter.
- Hydraulic scrapers.
- Lifting platforms.
- Workshop presses.
- Dump units for commercial vehicles.
- Liftgates.
- Handling, etc.

- Compact.
- Modular.
- Multiple distribution.
- Turnkey delivery.
- Easy to integrate

Options

- Manual or electrical distribution.
- Horizontal or vertical reservoir.
- Pulley drive.
- 12 or 24 V DC low voltage motor, ventilated or non-ventilated.

Flow rate (l/min)	Max. pressure (bar)	Motor (kW)	Reservoir capacity (l)	Reference
3,7	110	Three-phase 0.75	18,5	**CT126007S00A**
3,5	115	Single-phase 0.75	18,5	**CM126007S00A**
7,1	170	Three-phase 2.2	18,5	**CT149022S00A**
6,9	170	Single-phase 2.2	18,5	**CM149022S00A**
8.6	190	Three-phase 3	30	**GH1495L4HPS**
15.8	190	Three-phase 5.5	30	**GH1414L75HS**

Free study
Definition
Quotation
Delivery

MANY OTHER MODELS
Contact us

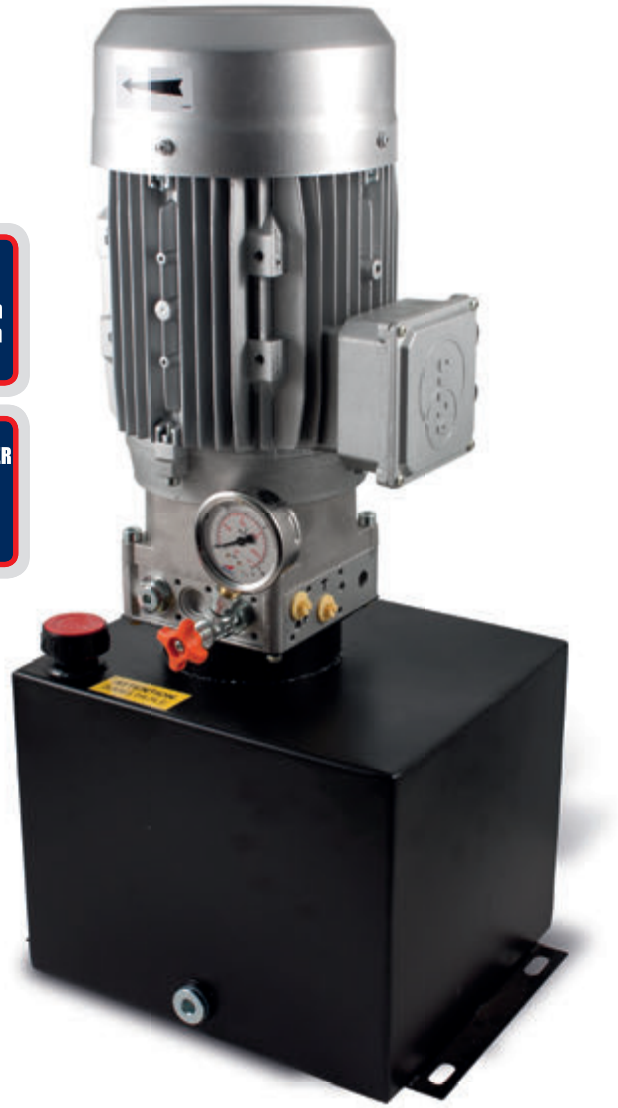

POWER PACKS WITH SPOOL VALVES FOR SNOW PLOUGHS

See page 18

IN-LINE NEEDLE VALVES

RU unidirectional needle valves

- Regulated flow direction A-B (free flow in the opposite direction.)
- Opening pressure: 0.5 bar.
- Maximum working pressure: 350 bar.
- Graduated rotary selector for precise flow control.
- Adjusting screw located on the side of the rotary selector for locking the valve in position.

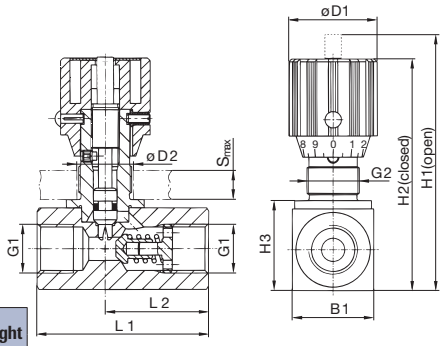

Max. flow rate (l/min)	Opening (BSP)	Reference	Bulkhead nut	Dimensions (mm)										Weight (kg)
				G2	H1	H2	H3	B1	ØD1	ØD2	S(Max)	L1	L2	
20	1/4	**RU7**	2 x EPE11LSC	PG11	83.5	77.5	27	25	29	19	7	55	34	0.30
35	3/8	**RU10**	2 x EPE11LSC	PG11	90	83	32	30	29	19	7	65	41	0.45
60	1/2	**RU13**	2 x EPE16LSC	PG16	109.5	99.5	38	35	38	23	7	73	44	0.70
90	3/4	**RU19**	2 x EPE16LSC	PG16	128.5	118.5	48	45	38	23	7	88	57	1.26
150	1	**RU25**	2 x EPE16LSC	PG16	159	146	55	50	49	38	10	127	77	2.60

RU_L unidirectional needle valves

- External sleeve for precise flow control.
- Knurled lock nut for locking the valve in position.

Max. flow rate (l/min)	Maximum pressure (bar)	Reference	L (mm)	A (mm)	D (BSP)	CH (mm)	Weight (kg)
12	350	**RU7L**	62	34	1/4	19	0.27
30	350	**RU10L**	72	40	3/8	24	0.43
45	310	**RU13L**	80	46	1/2	30	0.63
85	280	**RU19L**	100	54	3/4	36	1.05

- Compact.
- Economical.
- Discrete

Variable flow rate depending on pressure and viscosity

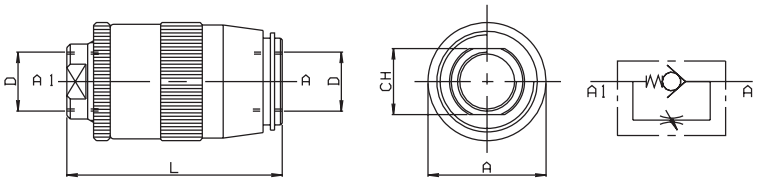

RD bi-directional needle valves

- Regulates flow in both directions.
- Graduated rotary selector for precise flow control.
- Adjusting screw located on the side of the rotary selector for locking the valve in position.
- Maximum working pressure: 350 bar.

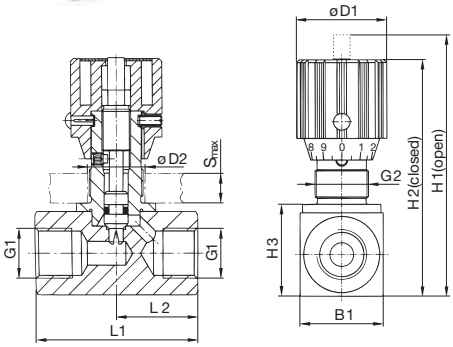

Max. flow rate (l/min)	Opening (BSP)	Reference	Bulkhead nut	Dimensions (mm)										Weight (kg)
				G2	H1	H2	H3	B1	ØD1	ØD2	S(Max)	L1	L2	
20	1/4	**RD7**	2 x EPE11LSC	PG11	83.5	77.5	27	25	29	19	7	48	24	0.25
35	3/8	**RD10**	2 x EPE11LSC	PG11	90	83	32	30	29	19	7	58	29	0.40
60	1/2	**RD13**	2 x EPE16LSC	PG16	109.5	99.5	38	35	38	23	7	68	34	0.60
90	3/4	**RD19**	2 x EPE16LSC	PG16	128.5	118.5	48	45	38	23	7	78	39	1.10
150	1	**RD100**	2 x EPE16LSC	PG16	159	146	55	50	49	38	10	108	54	2.40

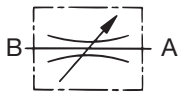

ORIFICES

Name	Reference
1/4 BSP plain union	**71060110**
Orifice Ø 0.8 mm	**71060118**
Orifice Ø 2 mm	**71060111**

Timeout of circuit control. Fixed bidirectional flow limitation.

IN-LINE FLOW REGULATORS

- Variable flow rate depending on pressure.
- **Reduced size:** the most compact on the market.
- **Foolproof:** internal setting.
- **High pressure rating:** 300 bar.
- **Precise:** several ranges of settings from 1 to 120 l/min.
- Assembled by us, on request.

Applications

- Load locking (associated with parachute valve).
- Constant cylinder speed, regardless of the load.

Mounting R	L	L1	L2	Ch
1/4	66	66	12	**19**
3/8	70	70	12	**22**
1/2	80	82	14	**27**
3/4	100	94	16	**32**

Mounting R	Flow rate (l/min)	Female reference	Male reference
1/4	1 to 1.6	**RDR0002VE1**	**RDR0002VE2**
1/4	1.6 to 2.5	**RDR0003VE1**	**RDR0003VE2**
1/4	2.5 to 4	**RDR0004VE1**	**RDR0004VE2**
1/4	4.6 to 6.3	**RDR0006VE1**	**RDR0006VE2**
3/8	6.3 to 10	**RDR0010VE1**	**RDR0010VE2**
3/8	10 to 16	**RDR0016VE1**	**RDR0016VE2**
3/8	16 to 25	**RDR0025VE1**	**RDR0025VE2**
1/2	21 to 28	**RDR0028VE1**	**RDR0028VE2**
1/2	28 to 37	**RDR0037VE1**	**RDR0037VE2**
1/2	37 to 50	**RDR0050VE1**	**RDR0050VE2**
1/2	50 to 67	**RDR0067VE1**	**RDR0067VE2**
3/4	67 to 90	**RDR0090VE1**	**RDR0090VE2**
3/4	90 to 120	**RDR00A2VE1**	**RDR00A2VE2**
3/4	120 to 150	**RDR00A5VE1**	**RDR00A5VE2**

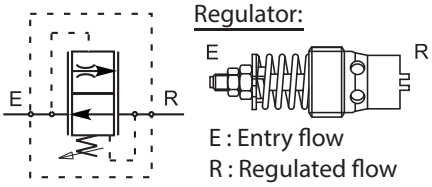

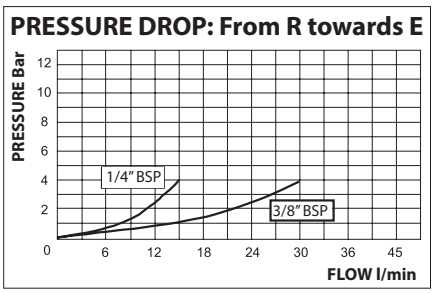

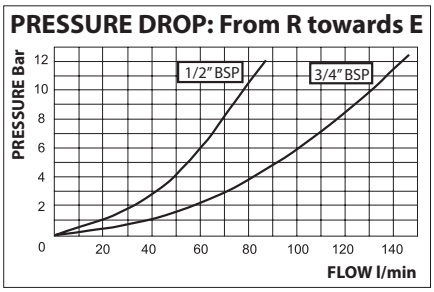

FEMALE / FEMALE

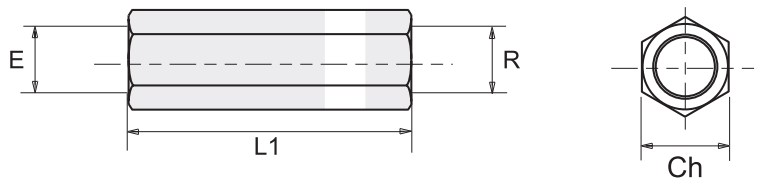

MALE/ FEMALE

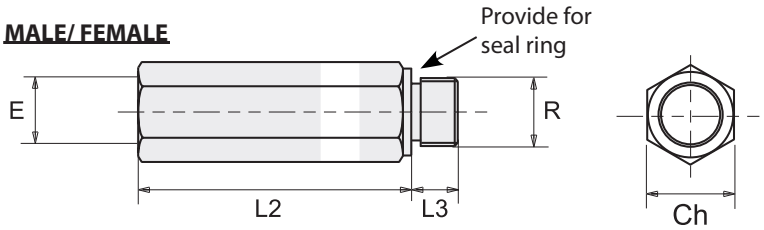

internal threaded zone

ADJUSTABLE FLOW DIVIDERS, MAX. 65 L/MIN

This divider enables a constant flow rate in A, regardless of pressure variations.
It divides the flow rate at the inlet, into a manually adjustable constant priority flow rate and a residual flow rate.
The residual flow rate (B) can be pressurised and directed toward a second receiver.

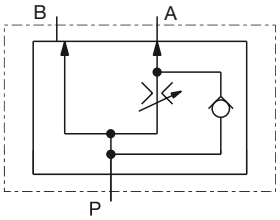

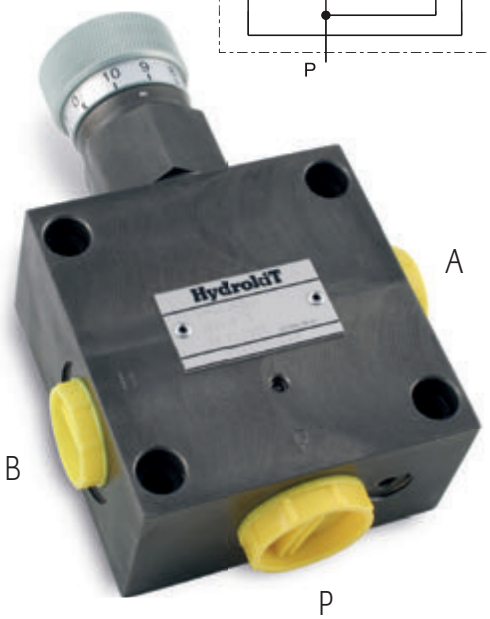

Specifications

- Zinc-plated bichromate body.
- Rotary selector for adjustment.
- Integrated check valve.
- Working temperature: -20°C to +70°C.

Flow rate controlled on A (l/min)	Max. flow rate in P (l/min)	Max. pressure (bar)	Valve opening pressure (bar)	Mounting		Reference
				A, B	P	
1 to 12	32	5 to 350	0.5	1/2	3/4	**DD6512KGAR**
1 to 25	65	5 to 350	0.5	1/2	3/4	**DD6525KGAR**
1 to 50	65	5 to 350	0.5	1/2	3/4	**DD6550KGAR**

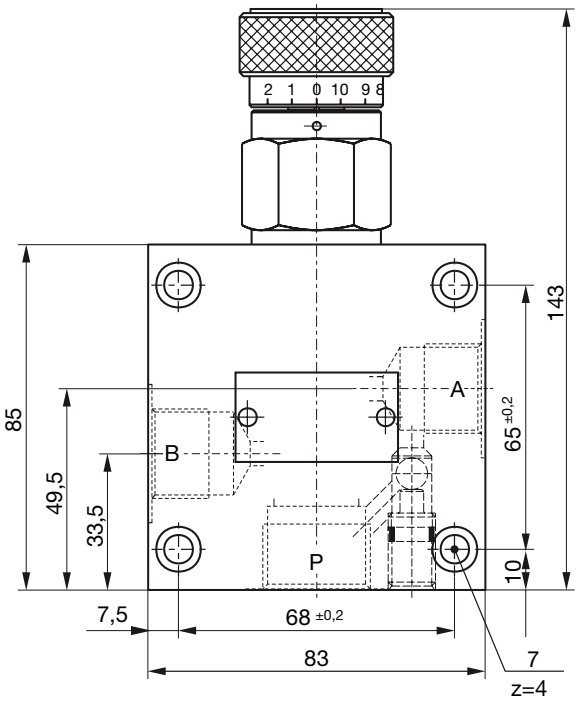

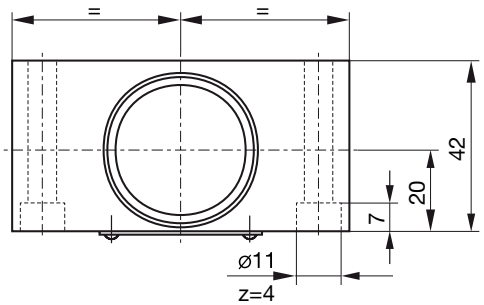

Flow according to knob position

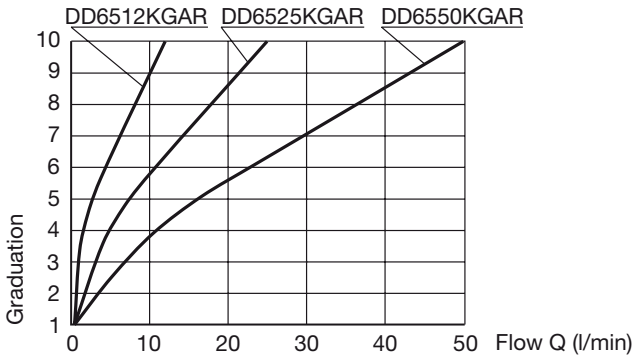

Δp-Q Performance curve of the valve

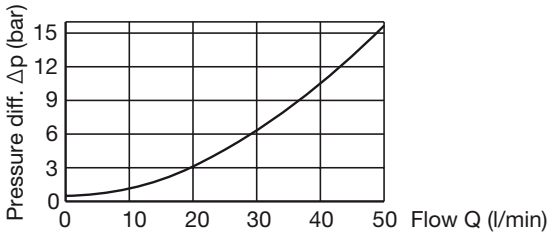

3-WAY FLOW REGULATORS, 50 AND 85 L/MIN

- Excellent value for money.
- Galvanised steel body.

This flow regulator enables a constant flow rate in P at a given adjustment, independently of the pressure or the flow rate entering into the valve. The residual flow rate must be directed to the reservoir (T) without pressure.

Flow rate (l/min)	Max. flow rate in P (l/min)	Working pressure (bar)	Mountings P, T, E (BSP)	Reference	L (mm)	L1 (mm)	L2 (mm)	L3 (mm)	L4 (mm)	H (mm)	H1 (mm)	S (mm)	Weight (kg)
0 to 30	50	250	3/8	**RDR5030MX1**	90	116	25	32	20	90	35	35	2.170
0 to 50	85	250	1/2	**RDR8550MX1**	90	116	25	32	20	90	35	35	2.096

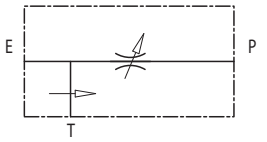

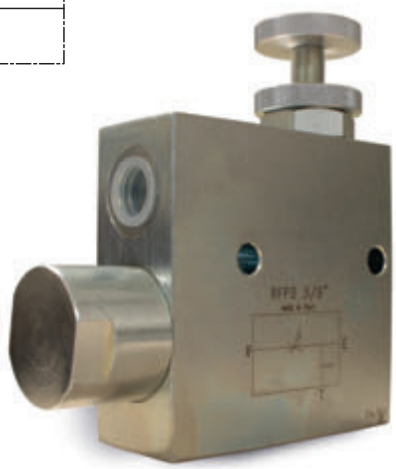

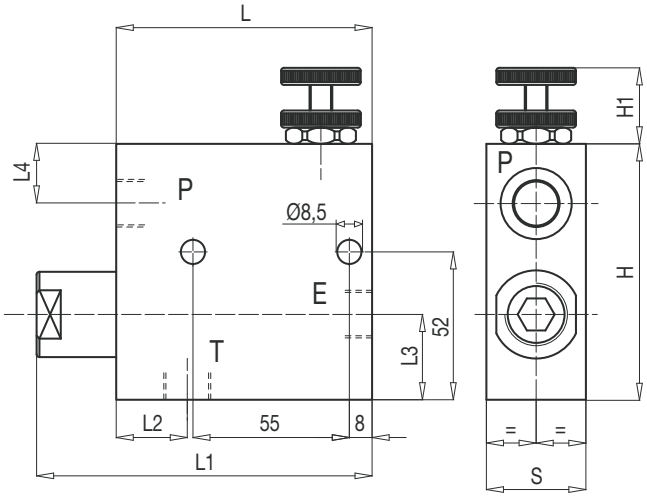

3-WAY FLOW RATE DIVIDERS, 150-250 L/MIN

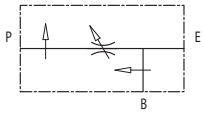

This divider makes it possible to keep flow rate P constant at a given adjustment, independently of the pressure or the flow rate entering into the valve. The residual flow rate is directed toward B and is available for a different function.

- Excellent value for money.
- B is not sensitive to pressure variations, but it is subject to flow rate variations.
- Galvanised steel body.

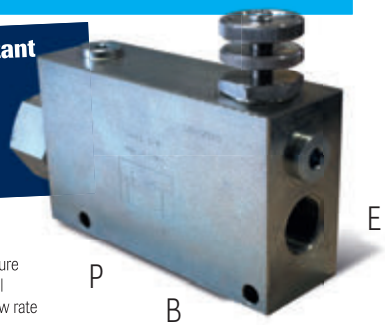

E: Inlet pressure
B: Residual
P: Controlled flow rate

Controlled flow rate on A (l/min)	Max. flow rate in P (l/min)	Max. pressure (bar)	Mountings P, E, B (BSP)	Reference	L (mm)	L1 (mm)	L2 (mm)	L3 (mm)	L4 (mm)	L5 (mm)	L6 (mm)	H (mm)	H1 (mm)	S (mm)	Weight (kg)	Item
0 to 90	150	350	3/4	**DDRA590MX1**	155	190	67	44	45	135	8	90	35	50	2.40	1
0 to 150	250	210	1"	**DDRB5A5MX1**	150	205	39	80	70	133	114.5	135	35	60	4.00	2

1

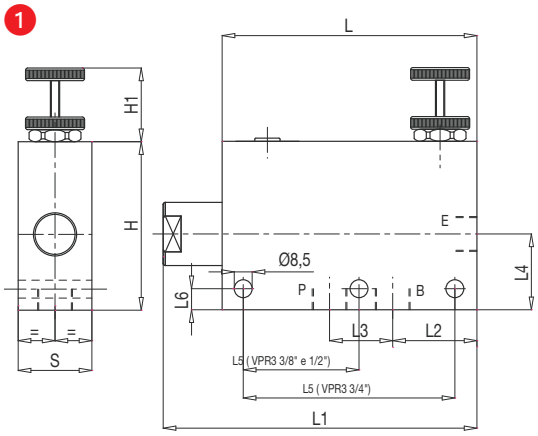

2

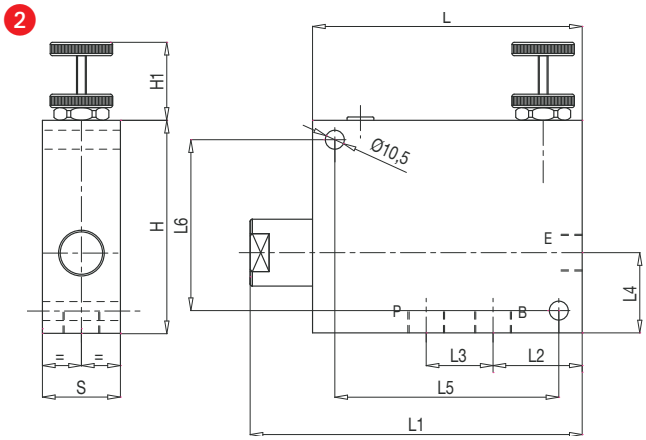

FLOW DIVIDERS 50/50

• Divides and accumulates (synchronisation in both directions).

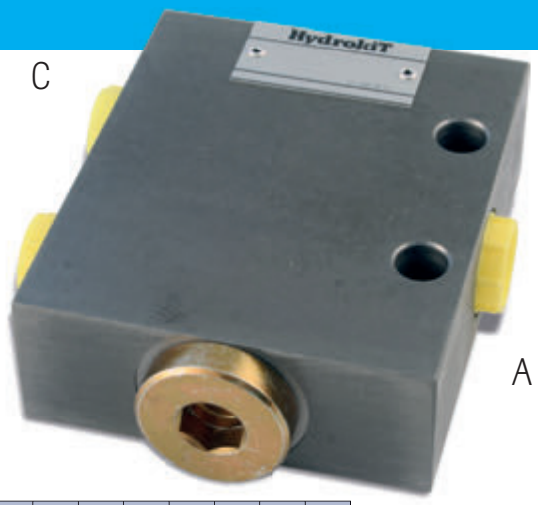

Applications

- 2 cylinder synchronisation.
  Creation of 2 circuits from just one pump.

Specifications

- Bidirectional in-line installation.
- 50 / 50 flow rate division.
- Working temperature: -20 +70°C.
- Zinc-plated bichromate body.

Minimum flow rate (l/min) on inlet A	Max. flow rate (l/min) on inlet A	Reference	Mountings A, B, C (BSP)	Max. pressure (bar)	Division	Specification	D	E	F	G	H	I	J	K
4	10	DDE0410BK0	1/4	350	50/50	5%	100	107.5	32	43.4	27.3	84	9.5	49
8	20	DDE0720BK0	3/8	350	50/50	5%	100	107.5	32	43.4	27.3	84	9.5	49
12	35	DDE1235BK0	3/8	350	50/50	5%	100	107.5	32	43.4	27.3	84	9.5	49
16	50	DDE1650BK0	3/8	350	50/50	5%	100	107.5	32	43.4	27.3	84	9.5	49
35	70	DDE3570BK0	1/2	350	50/50	5%	120	128	45	56	32	70	7.5	60
90	150	DDE90A5BO01	A: 1" B, C: 3/4	210	50/50	5%	160	-	80	78	41	-	8	80

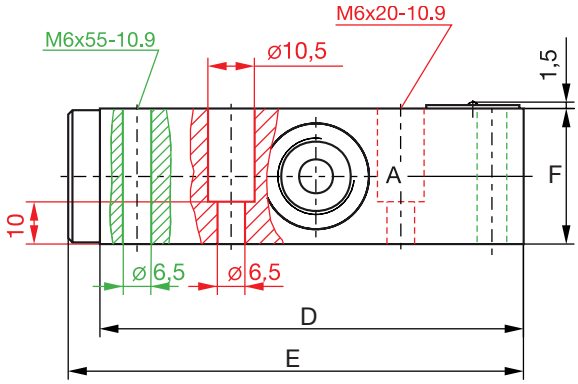

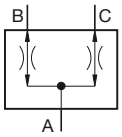

Models 4-10, 8-20, 12-35, 16-50 l/min

Model 35-70 l/min

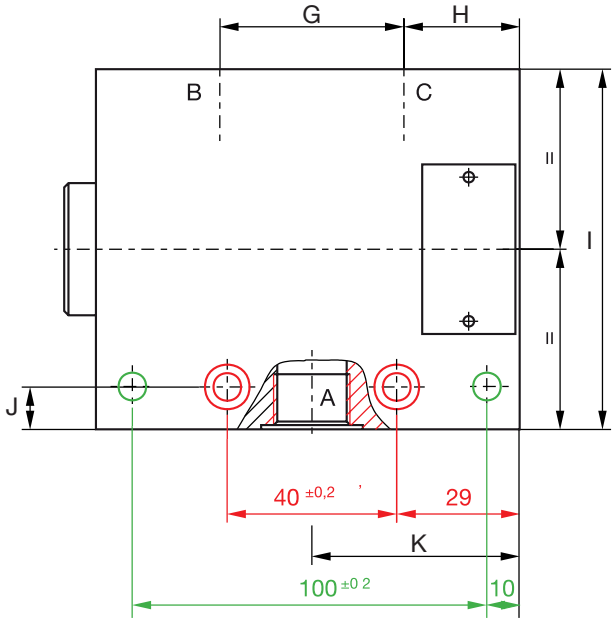

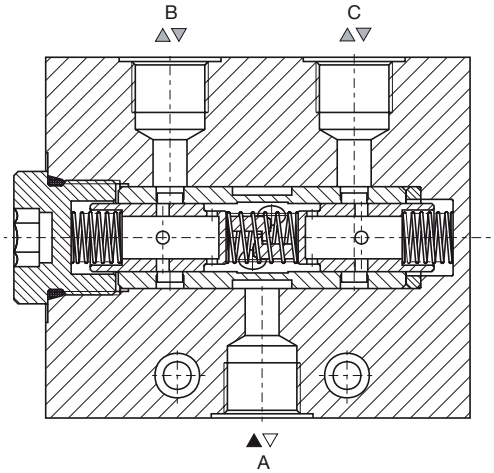

3-WAY FLOW REGULATORS, MAX. 65 L/MIN

The flow regulator divides the flow rate at the inlet, into a manually adjustable constant priority flow rate and a residual flow rate.

Specifications

- The priority flow rate (A) is protected by a pressure relief valve.
- The residual flow rate (R) must be directed to the reservoir without pressure.

Flow rate (l/min)	Max. flow rate in P (l/min)	Working pressure (bar)	Valve opening pressure (bar)	Mountings		Reference
				A, R	P	
1 to 25	65	5 to 250	0.5	1/2	3/4	**RDL6525KG**
1 to 50	65	5 to 250	0.5	1/2	3/4	**RDL6550KG**

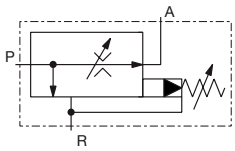

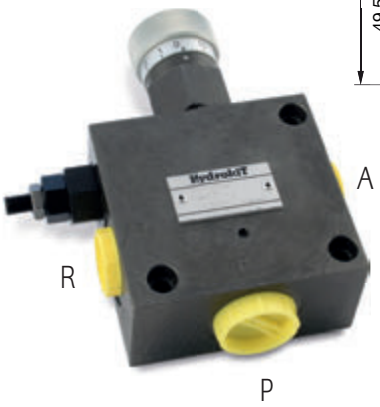

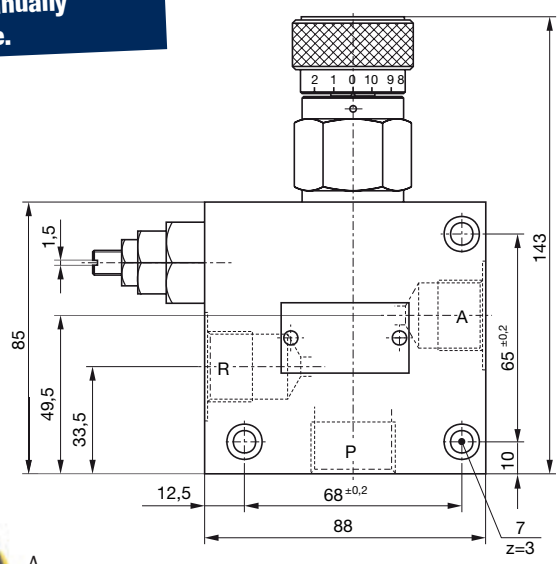

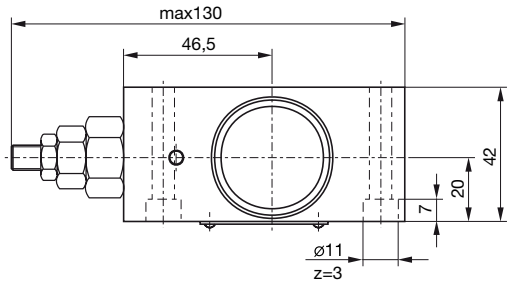

Flow according to knob position

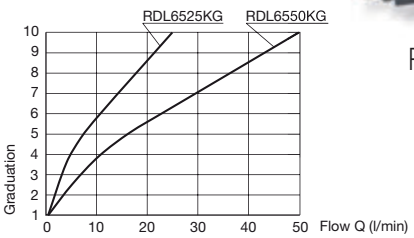

FLOW DIVIDERS, VOLUMETRIC

Specifications

- With or without end of stroke recovery.
- Temperature: -25 to +80°C.

Tightening torque

Name	Tightening torque (daN.m)
35 litre range	**2.5**
85 litre range	**5.0**

Example

Range	Displacement (cm³)	Max. flow rate at inlet (l/min)	Flow rate by sections (l/min)		Maximum continuous pressure (bar)	Minimum speed (rpm)	Max. speed (rpm)	Openings		
			Min	Max				Inlet	Outlets	Drain
35 l/min range	2	35	2.6	8.9	250	1250	4200	1/2	3/8	3/8
	3.15	35	3.97	13.2	250	1205	3990	1/2	3/8	3/8
	4	35	4.99	16.2	250	1175	3840	1/2	3/8	3/8
	5	35	6	19.5	250	1140	3680	1/2	3/8	3/8
	6.3	35	7.3	23.2	250	1100	3500	1/2	3/8	3/8
80 l/min range	4	80	6.17	20.2	250	1250	4100	3/4	1/2	1/2
	6.3	80	8.1	26.1	250	1235	3970	3/4	1/2	1/2
	8	80	10	31.6	250	1220	3850	3/4	1/2	1/2
	11.2	80	13.4	40.8	250	1200	3660	3/4	1/2	1/2
	14	80	17	50	250	1175	3460	3/4	1/2	1/2
	16	80	19.45	55.8	250	1160	3335	3/4	1/2	1/2
	20	80	23.8	65.7	250	1130	3125	3/4	1/2	1/2
	25	80	28.92	76.2	250	1100	2900	3/4	1/2	1/2
	31.5	80	34.8	87.4	250	1060	2660	3/4	1/2	1/2

MOTORISED FLOW DIVIDERS

Remotely adjusts a hydraulic flow rate from a control box.

Applications

- Variable flow rate control depending upon the position of the dial. Precise adjustment.
- The pressure of the inlet flow is establised according to the receiver with the greatest load.
- Flow divider and control box supplied pre-wired.

Note: For equipment with self-regulating pumps, it is necessary to plug the B port.

Specifications

- 12 or 24 VDC supply.
- 1-10 scaled potentiometer.
- One-turn adjustment.
- Fuse protection.
- Integrated check valve.
- Working pressure: 315 bar.
- Nominal flow rate 65 l/min - temperature -20°C to +80°C.
- Control pressure ±5%.
- Pressure loss P: 3.5 bar.
- Gear motor speed: 9 rpm.
- Adjusted flow rate: 0-12 l/min, 0-25 l/min, 0-50 l/min.

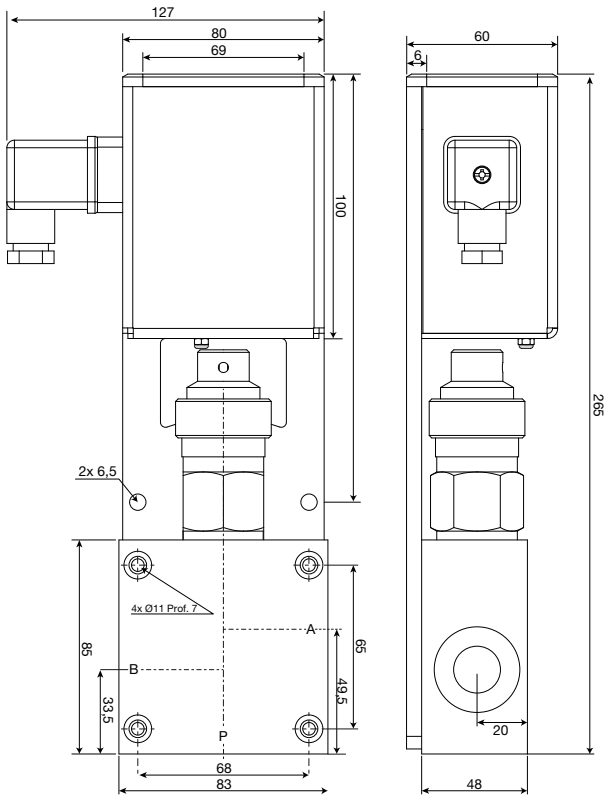

Max. flow rate (l/min)	Controlled flow rate (l/min)	Voltage (V)	Pressure (bar)	Mountings A, B (BSP)	Mounting P (BSP)	Reference
65	1 to 50	12 and 24	5 to 315	1/2	3/4	**DD6550K12B**

Boxes See page 191

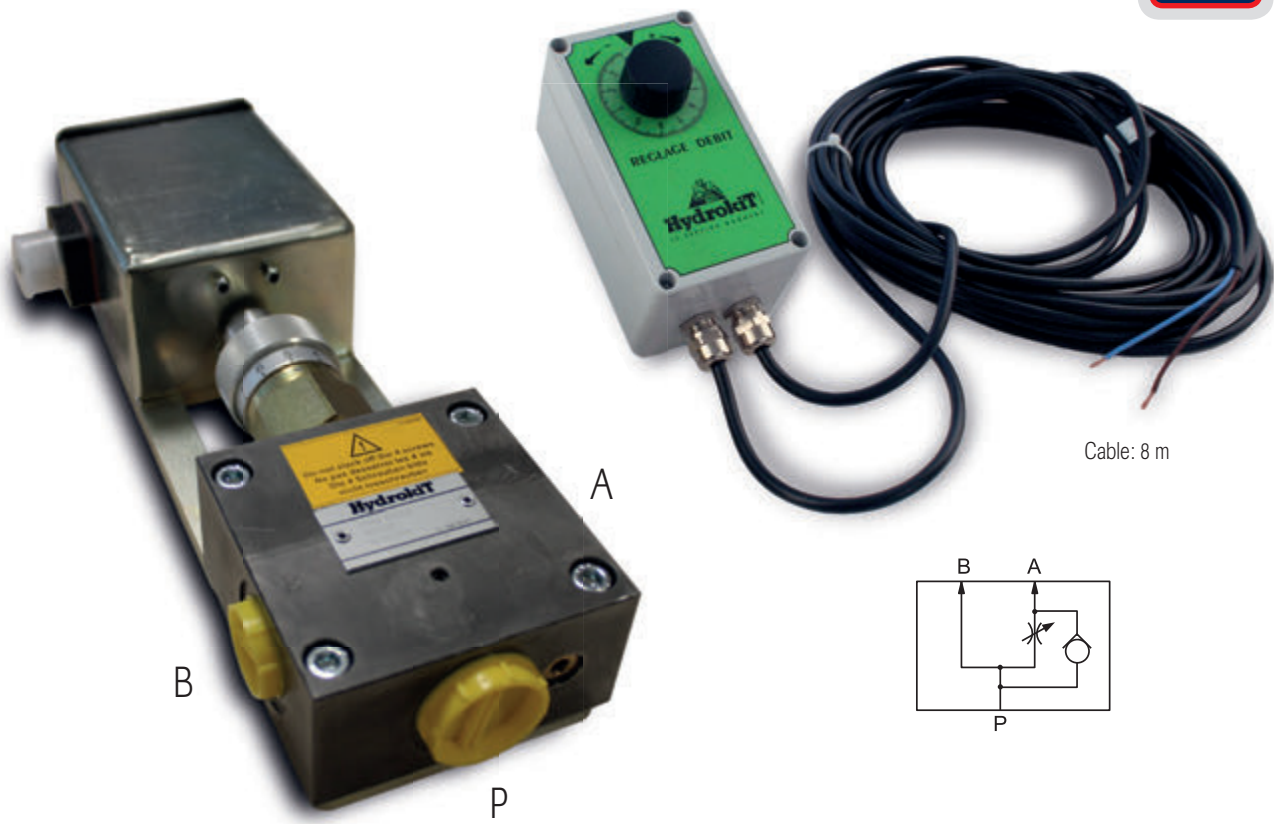

ELECTRICALLY-CONTROLLED PROPORTIONAL FLOW DIVIDERS

The flow divider divides the flow rate at the inlet, into a manually adjustable constant priority flow rate and a residual flow rate. 3-way divider with pressure balance.

Specifications

- PWM electrical control.
- The residual flow rate can be pressurised and directed toward a second receiver.
- Max. flow rate: 150 l/min.
- Max. pressure: 210 bar.
- Temperature: -20° to +70°C.

Control	Flow rate at inlet (l/min)	Controlled flow rate (l/min)	Pressure (bar)	Mounting	Voltage (VDC)	Reference without check valve	Reference with check valve
Electrical, 12 V	90	0 to 50	210	1/2	12	**DDP90501H1**	**DDP90501H2**
	150	0 to 90	210	3/4	12	**DDPA5901H1**	**-**
Electrical, 24 V	90	0 to 50	210	1/2	24	**DDP90502H1**	**DDP90502H2**
	150	0 to 90	210	3/4	24	**DDPA5902H1**	**-**

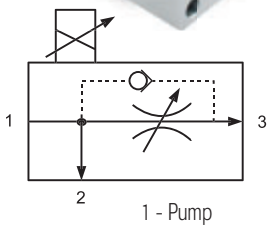

1 - Pump
2 - Residual flow rate
3 - Priority flow rate

Electrical control
with or without check valve.

Models without check valve

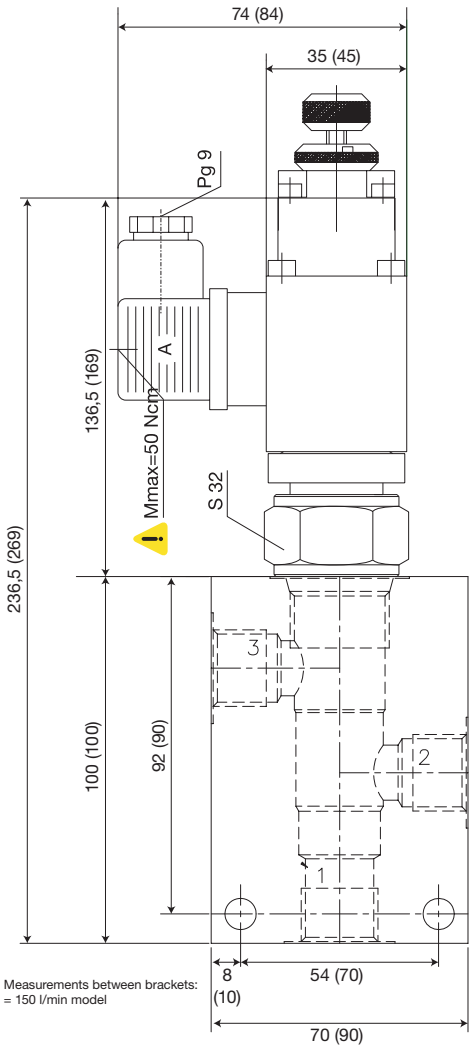

Measurements between brackets: = 150 l/min model

Models with check valve

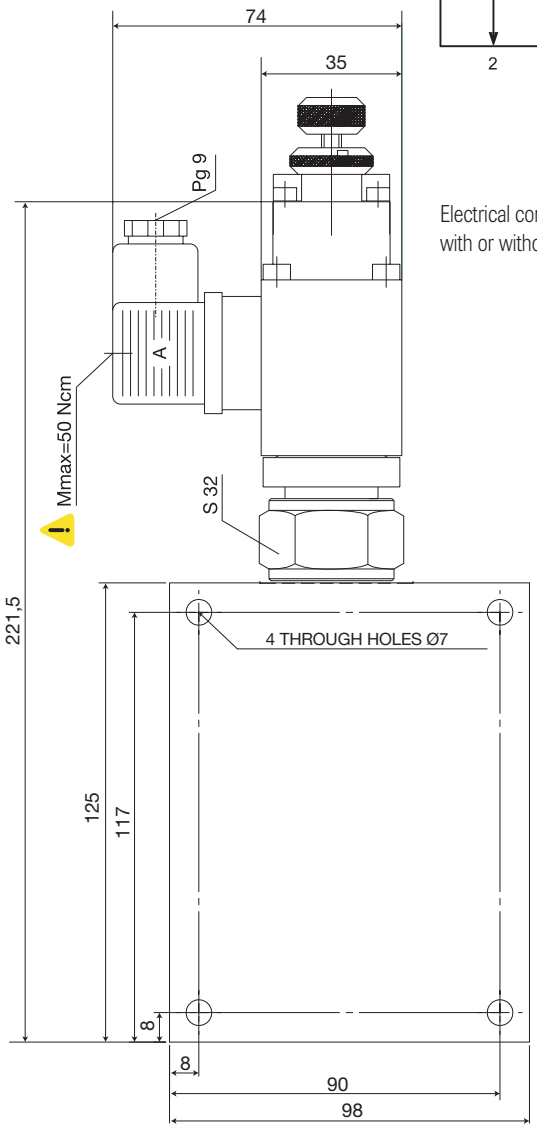

Provide 10 µm filtration. See pages 71-72

FLOW REGULATORS, FLANGE-MOUNTABLE ON OMP/OMR MOTORS

Specification

- Single direction regulation, from 0 to 50 l/min.

Reference: RDR1F

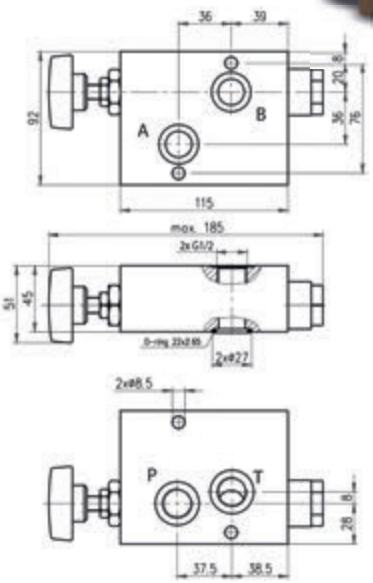

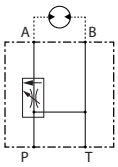

OMP / OMR motors See pages 173-177

3-WAY FLOW REGULATION BLOCKS FLANGE-MOUNTABLE AND PROPORTIONAL

Specifications

- Max. pressure: 210 bar.
- Inlet flow rate: 70 l/min.
- Controlled flow rate: 0 to 50 l/min.

DDP70501H1

References

Name	Flange-mountable on OMP/OMR motors 1	Flange-mountable on OMS motors 2
Electrical, 12 V	DDP70501H1	DDP70501H2
Electrical, 24 V	DDP70502H1	DDP70502H2

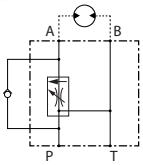

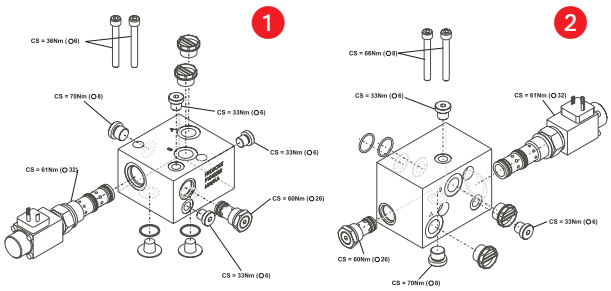

DUAL-FLOW, TWO-WAY FLOW REGULATORS

Hydraulic motor or cylinder double-acting supply (implements on telehandler, hedgecutter).

- Regulates flow and supply pressure to your implements.
- Protects your implements.

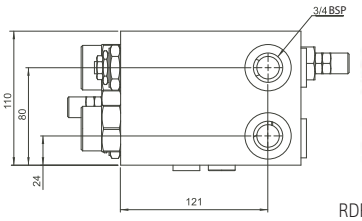

RDRA370VH3

Max. pressure (bar)	Flow rate at inlet (l/min)	Controlled flow rate (l/min)	Pressure adjustment (bar)	Mounting		Reference
				Inlet	Outlet	
315	120	10 to 70	10 to 200	3/4	1/2	RDRA370VH3
315	120	10 to 70	No	3/4	1/2	RDRA370VH4
315	120	10	10 to 200	3/4	1/2	RDFA310GH1A
315	120	10	No	3/4	1/2	RDFA310GH2A
315	120	20	10 to 200	3/4	1/2	RDFA320GH1A
315	120	20	No	3/4	1/2	RDFA320GH2A
315	120	30	10 to 200	3/4	1/2	RDFA330GH1A
315	120	30	No	3/4	1/2	RDFA330GH2A
315	120	40	10 to 200	3/4	1/2	RDFA340GH1A
315	120	40	No	3/4	1/2	RDFA340GH2A
315	120	50	10 to 200	3/4	1/2	RDFA350GH1A
315	120	50	No	3/4	1/2	RDFA350GH2A
315	120	60	10 to 200	3/4	1/2	RDFA360GH1A
315	120	60	No	3/4	1/2	RDFA360GH2A
315	120	70	10 to 200	3/4	1/2	RDFA370GH1A
315	120	70	No	3/4	1/2	RDFA370GH2A

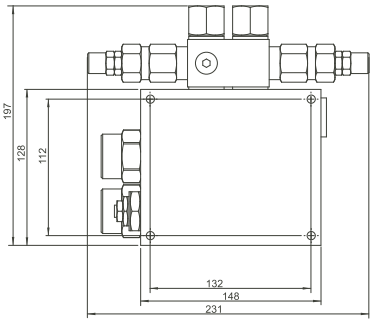

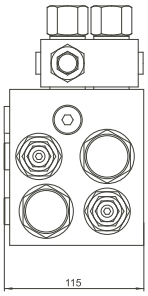

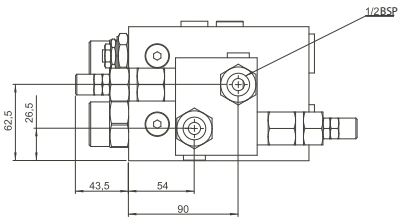

DOUBLE BYPASS FLOW DIVIDERS

Applications

- Provides flow and pressure regulation on double pump circuits.
- Excavator with hammer line.
- Forestry shredder.
- Implements requiring high flow rates on machines not preconfigured.

- A single adjustment to regulate the flow rate of the pumps.
- The activated connection block enables other machine movements.
- A single adjustment acting on the flow rate of the pumps.

P Regulated flow

P1, P2 Pump

B1, B2 Towards the original spool valves

B1 Regulated flow

T Drain

1 Pressure adjustment

2 Flow rate adjustment

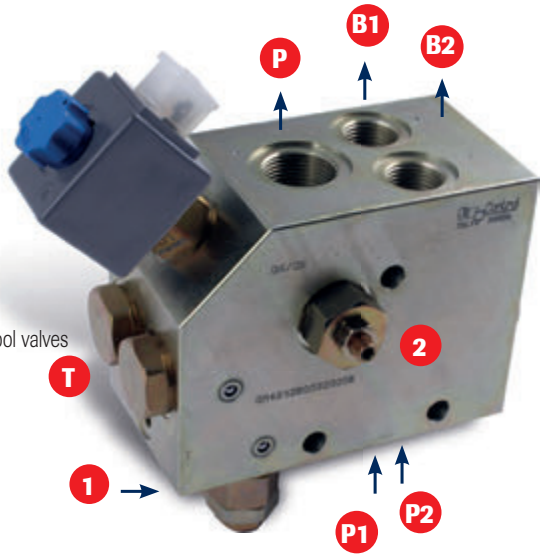

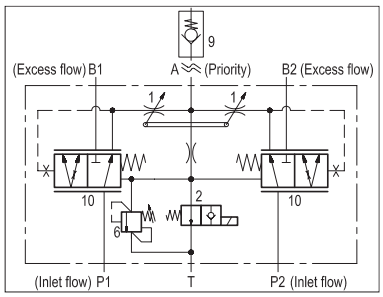

Enables 2 pumps to accumulate one controlled flow rate that takes priority over the rest of the functions.

Max. flow rate at inlet (l/min)	Controlled flow rate at outlet (l/min)	Outlet pressure (bar)	Mounting			Voltage (V)	Reference
			P1, P2, B1, B2	P	T		
2x100	20 to 150	10 to 350	1/2BSP	3/4	1/4	12	**DDBB0A51C0**
2x100	20 to 150	10 to 350	1/2BSP	3/4	1/4	24	**DDBB0A52C0**
2x200	20 to 250	10 to 350	3/4BSP	1"	1/4	24	**DDBD0B52C0**
2x300	20 to 390	10 to 350	1"BSP	1" 1/4	1/4	-	**DDBC0C9XC0**

LS REGULATION BLOCK PRESSURE + FLOW (120 L/MIN)

Applications

- Auxiliary line installation on construction and agricultural vehicles with Load Sensing circuits.
- Auxiliary line on excavator and backhoe.
- Tractor PTO (front mounted).

- A single electric control for the whole circuit.
- A single block for flow rate and pressure.
- Compact block.
- Easy adjustment.

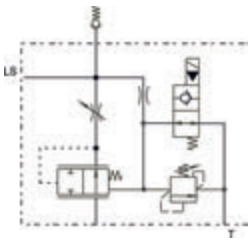

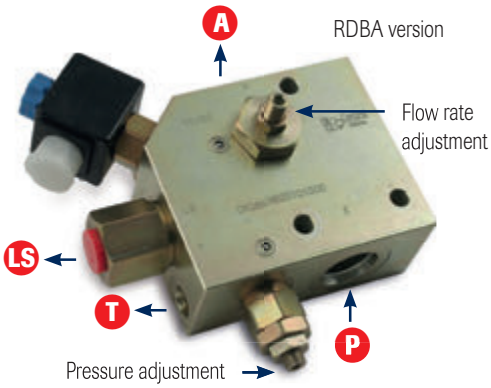

Max. pressure (bar)	Controlled flow rate (l/min)	Outlet pressure (bar)	Mounting		Voltage (V)	Reference
			A, P	T, LS		
350	0 to 140	50 to 120	1"1/16 SAE	9/16 SAE	12	**RDBA4A41C0**
350	0 to 140	50 to 120	1"1/16 SAE	9/16 SAE	24	**RDBA4A42C0**
350	0 to 80	50 to 120	3/4 BSP	1/4 BSP	12	**RDB80801C0**
350	0 to 80	50 to 120	3/4 BSP	1/4 BSP	24	**RDB80802C0**

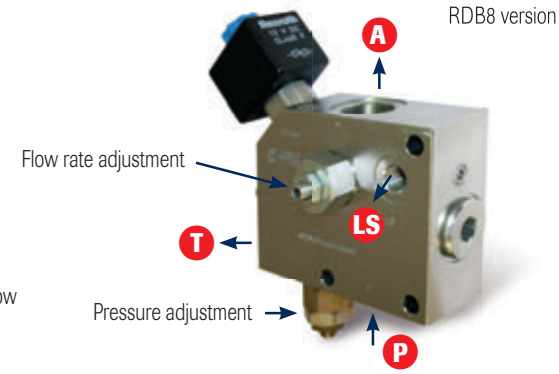

Also exists in 55 l/min models

P Pump

A Regulated flow

LS LS

T Drain

BLADDER ACCUMULATORS

Applications

- Hydro-pneumatic suspension.
- Maintains pressure.
- Dynamic safety.
- Leak compensation.
- Leak protection.
- Protection (against impacts).
- Temperature: -20° to +120°C
- Pulsation damping.

Different sizes Contact us Range from 0.16 to 50 litres

Capacity (L)	Max. pressure (bar)	Opening ØB	Reference	Dimensions A (mm)	Weight (kg)
0.7	330	1/2	AV0700 ••• L	176	4
1.1	330	3/4	AV1000 ••• L	246	5.9
1.5	330	3/4	AV1500 ••• L	315	7.8
2.5	330	3/4	AV2500 ••• L	464	11.5
4	330	3/4	AV4000 ••• L	696	17.5

•••: Replace with the desired inflation pressure: E.g.: 200 for 200 bar

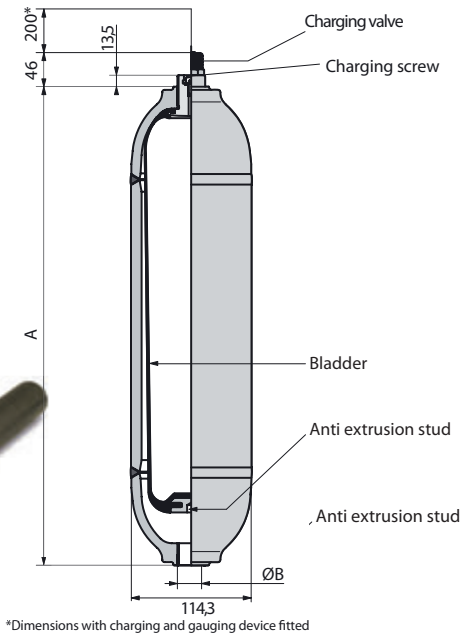

*Dimensions with charging and gauging device fitted

Piston model Contact us

ACCUMULATOR INFLATION

Contact us

INFLATION TOOL KITS

- A vital tool for testing OLAER, LEDUC and HYDAC accumulators.

Composition

- Tester / inflator M28 x 150.
- Pressure gauge kit 0 - 25 bar and 0 -250 bar.
- Adapters for accumulator connection: 5/8" - 3/4" BSP - 7/8".
- Flexible hose (L = 2.5 metres) to connect nitrogen bottle (Max pressure 400 bar).
- Male hex key and spare seals.

Reference:
EAAGONFL01

Enables inflation and testing of hydraulic accumulators.

ACCUMULATOR FOR SUSPENDED FRONT AXLE ON TRACTOR

Contact us

FIXING COLLARS

- Specifically profiled clamps allows for perfectly adapted fixation.

Fastening of the accumulators.

Specifications

- Ø 115 mm for AV accumulator.

References:
CAV0700L and CAV1500L

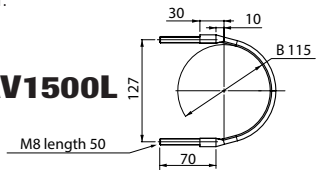

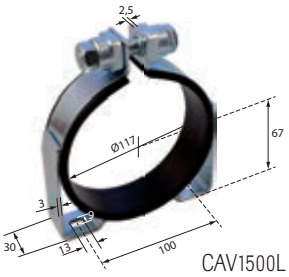

CAV1500L

CAV0700L

PRESSURE RELIEF VALVE DIRECT ACTING

Max. flow rate (l/min)	Max. working pressure	Adjustment (bar)	3 openings (BSP)	Item	Reference
20	350	5 to 100	1/4"	1	**LP020A**
20	350	10 to 210	1/4"	1	**LP020B**
35	350	5 to 100	3/8"	2	**LP035A**
35	350	10 to 200	3/8"	2	**LP035B**
35	350	50 to 350	3/8"	2	**LP035C**
60	350	5 to 50	1/2"	3	**LP060A**
60	350	10 to 150	1/2"	3	**LP060B**
60	350	25 to 250	1/2"	3	**LP060C**
60	350	40 to 300	1/2"	3	**LP060D**
80	350	5 to 50	3/4"	3	**LP080A**
80	350	10 to 150	3/4"	3	**LP080B**
80	350	25 to 250	3/4"	3	**LP080C**
80	350	40 to 300	3/4"	3	**LP080D**

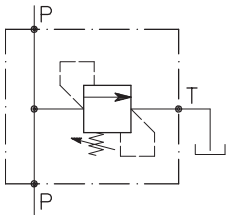

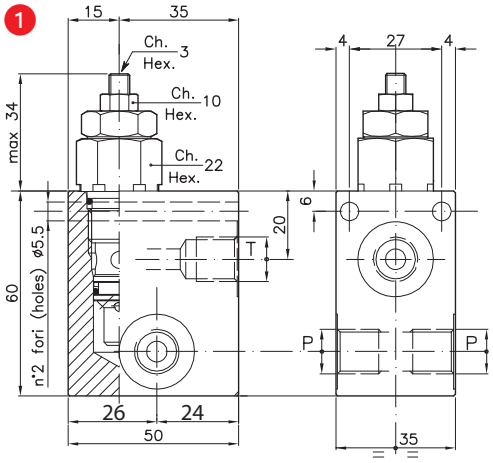

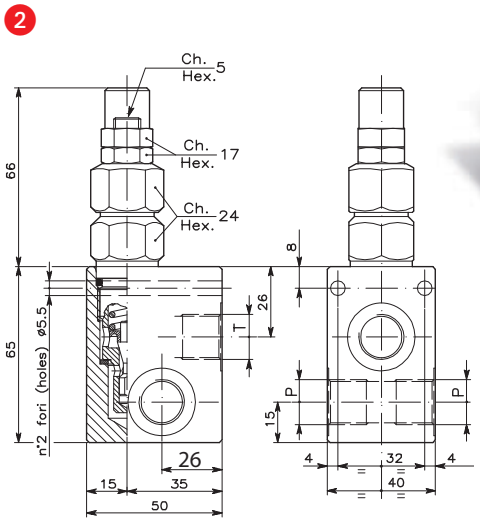

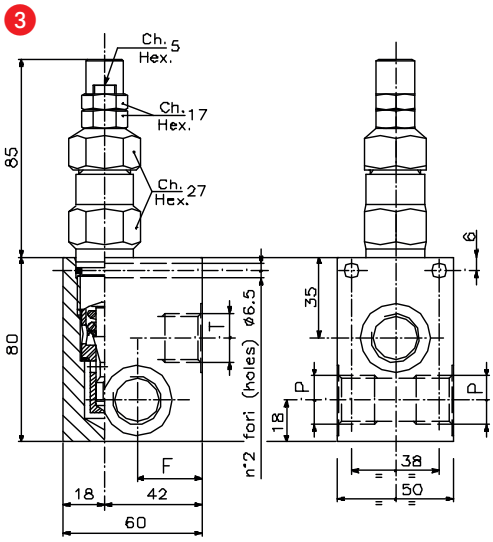

PRESSURE RELIEF VALVE DOUBLE ACTING

Max. flow rate (l/min)	Max. working pressure (bar)	Pressure adjustment (bar)	Mounting	A	B	C	D	E	F	Reference
35	350	10 – 210	3/8	80	60	40	5.5	18	64	**LPL2038B**
35	350	10 – 210	1/2	80	60	40	5.5	18	64	**LPL2012**
80	350	40 – 300	3/4	100	80	50	6	20	80	**LPL2034**

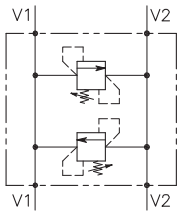

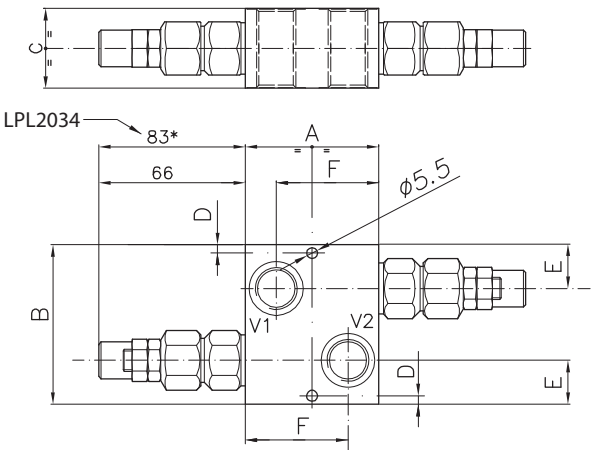

PRESSURE RELIEF VALVE WITH EXTERNAL PILOTING

Specifications

- Steel body.
- High flow rate 200 l/min.

References

Max. flow rate (l/min)	Pressure adjustment (bar)	Openings 1 and 2 (BSP)	3 openings (BSP)	Temperature (°C)	Reference
100	30-350	3/4"	1/4"	-20 to +90	**LP150D201I**
200	30-350	1"	1/4"	-20 to +90	**LP250D201I**

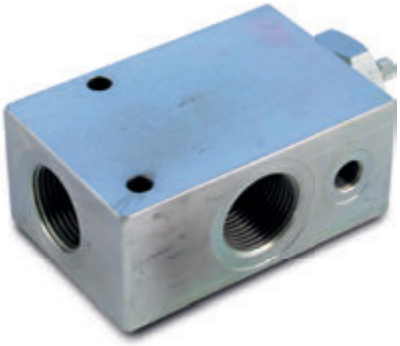

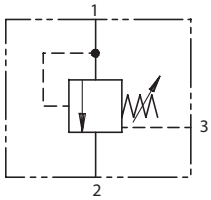

CETOP pressure relief valve See page 141

LP150D201I

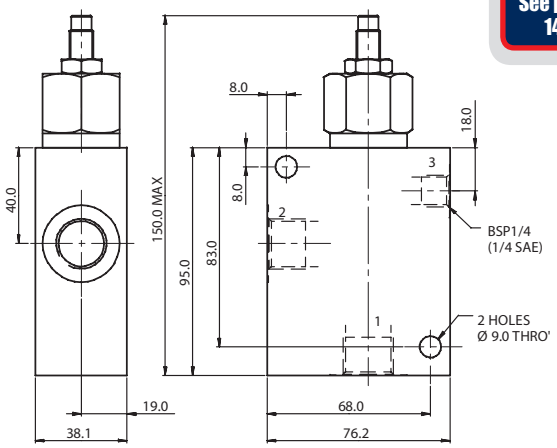

LP250D201I

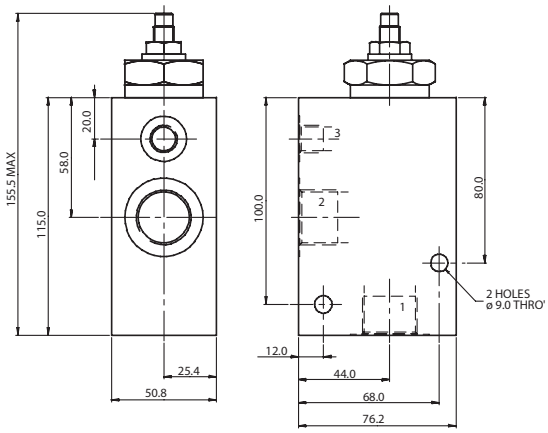

ANTI-SHOCK, ANTI-CAVITATION UNITS

Motor protection on auxiliary line.
Motor protection on turret.
Cylinder protection.

References

Max. flow rate (l/min)	Max. working pressure (bar)	Pressure adjustment (bar)	Mountings T, V1-V2 (BSP)	Mounting M1-M2 (BSP)	Item	Reference
80	210	80-250	1/2"	-	1	**LP080JE01C**
150	350	130-350	3/4"	1/4	2	**LP150KE01C**

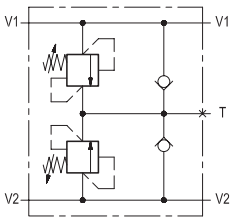

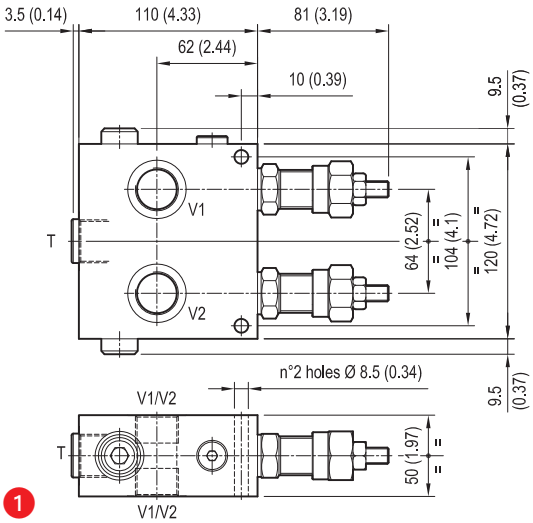

1

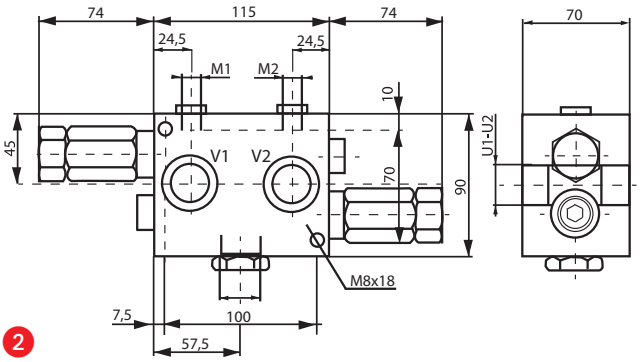

2

PRESSURE REDUCTION VALVES

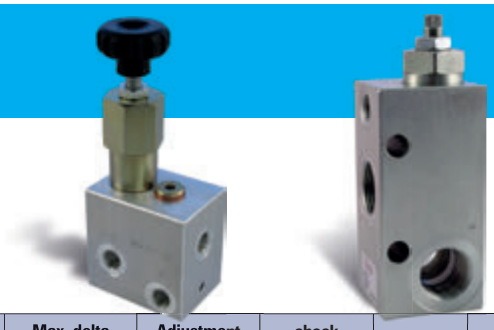

Specifications

- Max. pressure: 350 bar.
- Adjustment range from 10 to 350 bar.
- Max. pressure differential 210 bar.
- 1/4BSP drain.

Max. flow rate (l/min)	Max. pressure (bar)	Adjustment range (bar)	Mounting				Max. delta 2 – 1	Adjustment via	check valve	Diagram	Reference
			A	P	DR	M					
45	350	0 to 250	1/4"	1/4"	1/4"	1/4"	210	Wheel	Yes	1	**VRP14B**
45	350	0 to 250	3/8"	3/8"	3/8"	1/4"	210	Wheel	Yes	1	**VRP38B**
			P	R	REG						
20	210	3 to 42	3/8"	3/8"	3/8"		105	Screw	Yes	2	**VRP038421C**
			Mountings								
30	350	5 to 25	3/8"				210	Screw	No	3	**VRP038IH2**
100	350	30 to 350	3/4"				210	Screw	No	4	**VRP034DIH**

1

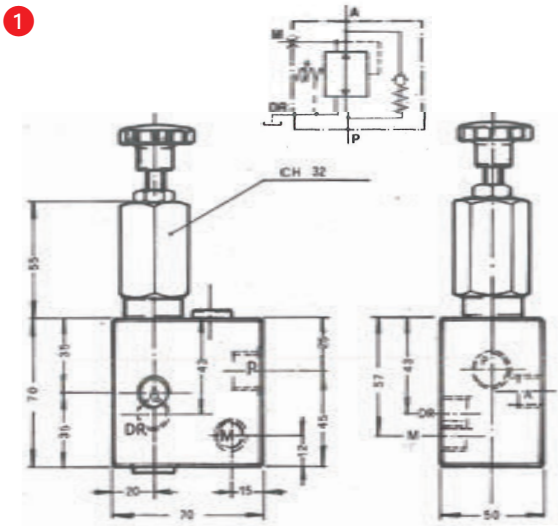

4

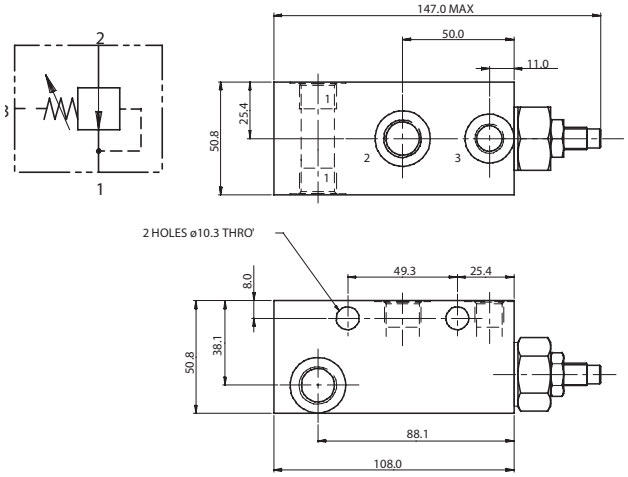

2

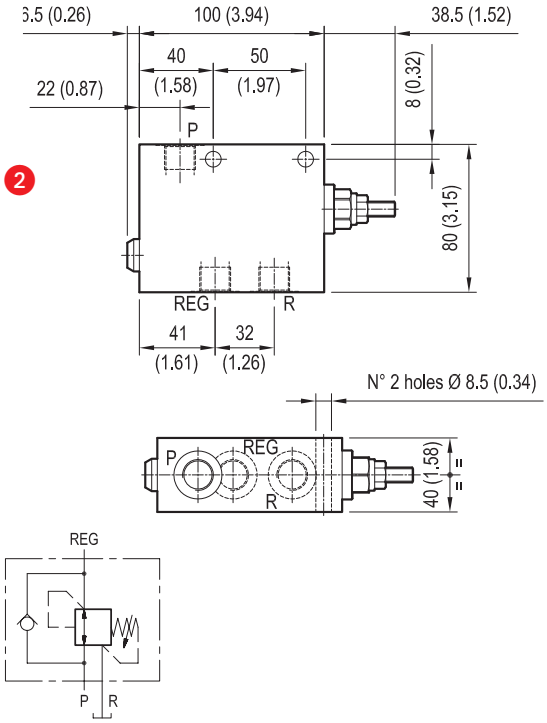

3

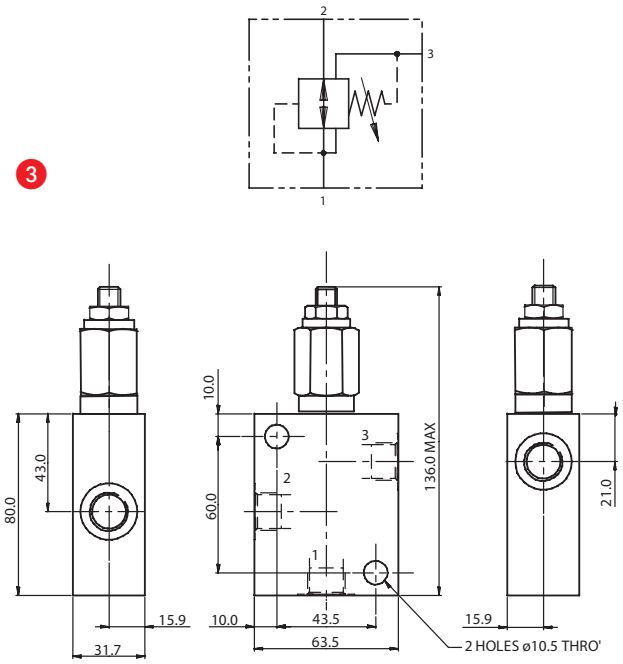

DOUBLE PRESSURE RELIEF VALVES FLANGE-MOUNTABLE ON MOTORS

Specifications

Type of motor	Adjustment (bar)	Mountings V1-V2	Reference
Flange-mountable on OMP/OMR motor	10-180	BSP 1/2"	**LPR2BB**
Flange-mountable on OMS motor	10-180	BSP 1/2"	**LPS2BOM1**
Flange-mountable on OMT motor	10-180	BSP 3/4"	**LPT2BOM1**

- Compact.
- No connections.

Motors See pages 173-177

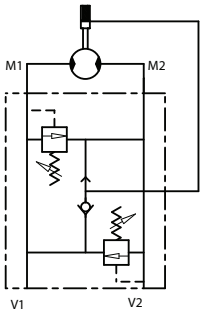

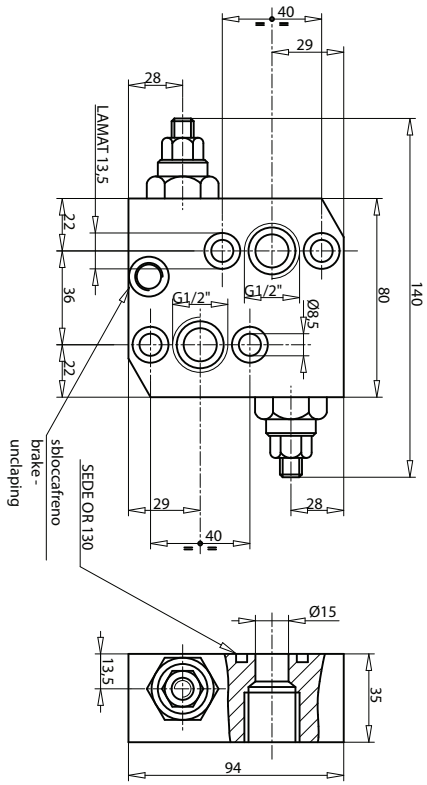

LPR2BB

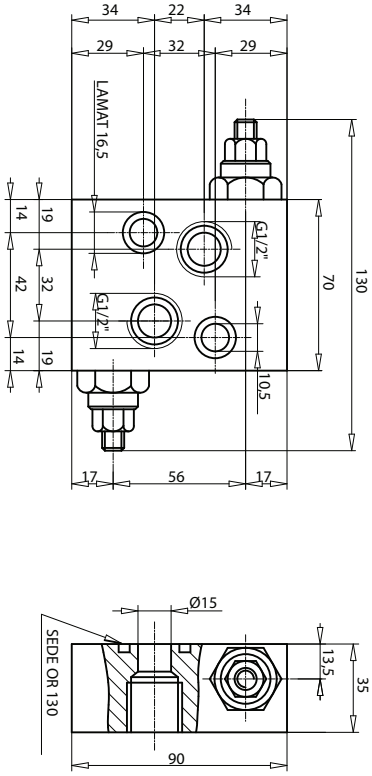

LPS2BOM1

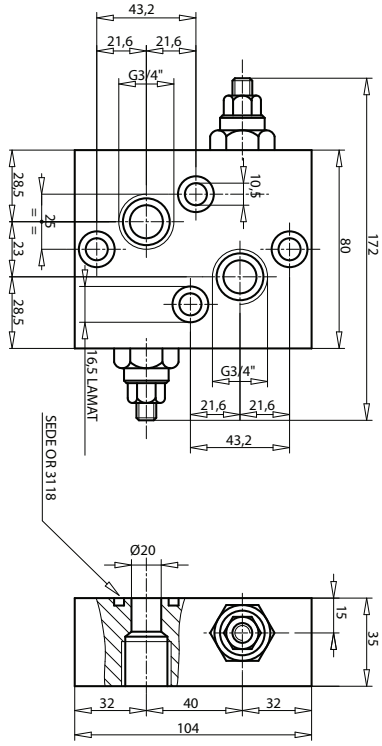

LPT2BOM1

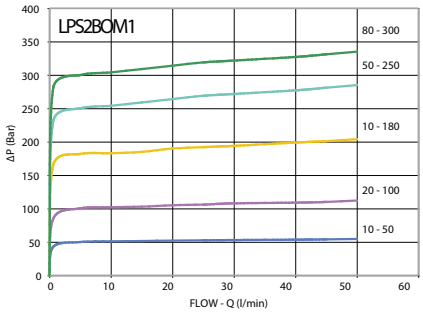

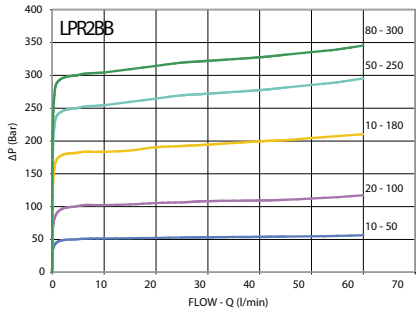

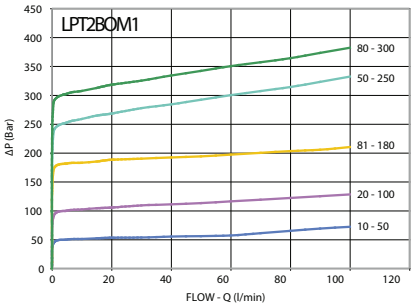

HYDRAULIC END STROKE VALVES

Stops cylinder movement.

- Easy installation (no electrical wiring required.)
- Easy adjustment (mounting via chain, strap, etc.).

FCNF038OM1

Flow rate (l/min)	Pressure (bar)	Mounting	Rest position	L	L1	L2	L3	L4	L5	L6	L7	ØG	ØG1	H	H1	S	Reference
40	350	3/8	Closed	80	105	35	10	55	30	14	55	-	-	50	-	35	**FCNF038OM1**
60	350	3/8	Closed	69	130	66	45	45	41	103	-	8.5	6.5	26	68	-	**FCNF038OM2**
60	350	1/2	Closed	80	105	35	10	55	28.5	14	55	-	-	50	-	35	**FCNF012OM1**
60	350	3/8	Open	69	130	66	45	45	41	103	-	8.5	6.5	26	68	-	**FCNO038OM2**

FCNF038OM1

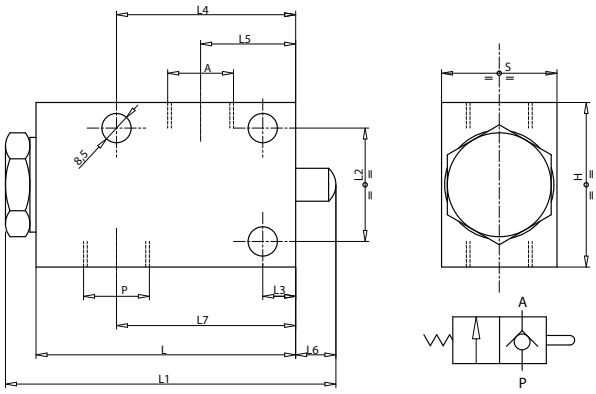

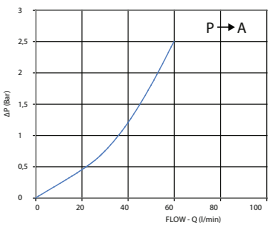

FCNF012OM1

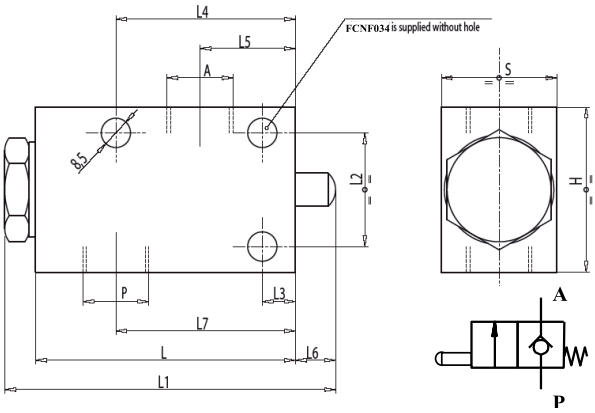

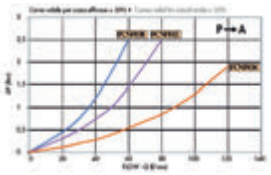

FCNF038OM2 / FCNO038OM2

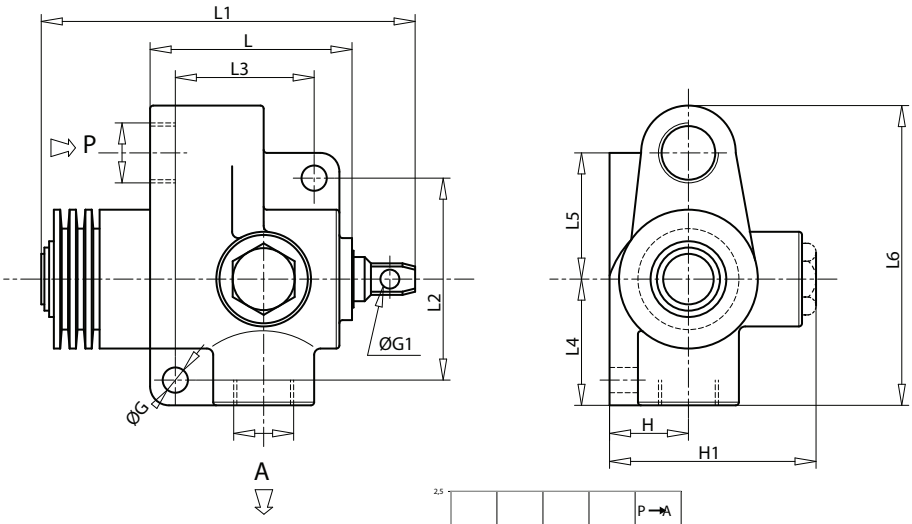

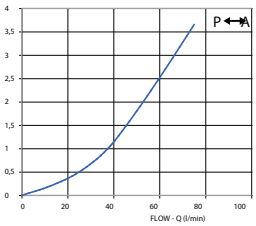

Diagram FCNF038OM2

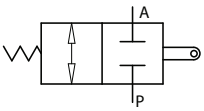

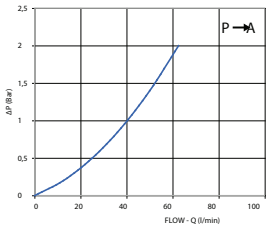

Diagram FCNO038OM2

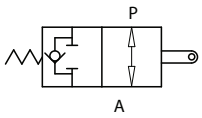

LOW PRESSURE BALL VALVES

Application

- Installation on the suction line.

Ø (inch)	Ø (mm)	L (mm)	H (mm)	L1 (mm)	PS (bar)	Weight (kg)	Reference
3/4"	20/27	56	48.5	84	20	0.24	**RBS2034BP**
1"	26/34	67	50	96	20	0.36	**RBS2100BP**
1"1/4	33/42	76	66	116	20	0.56	**RBS2114BP**
1"1/2	40/49	89	73	136	20	0.83	**RBS2112BP**
2"	50/60	103	87	162	18	1.37	**RBS2200BP**

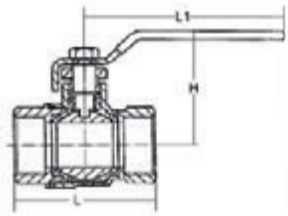

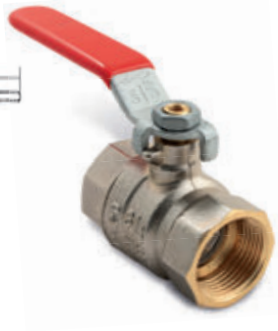

CYLINDRICAL BALL VALVES

Valve with 2 ports

- Cylinder locking.

Mounting	Flow rate (l/min)	Pressure (bar)	Item	Reference
13BSP (20 x 150) male	20	200	1	**ROB8EFG13**
3/8BSP female	20	200	2	**ROB8FG038**

Single or double valves with 3 or 4 ports

- Manual control for 2 separate actuators.

Number of openings	Max. flow rate (l/min)	Max. pressure (bar)	Openings A, B, (T), P (BSP)	C	D	E	F	G	H	I	L	M	N	Single reference		Double reference	
Valves with 3 openings	60	350	3/8"	72	25	8.5	32	77	24.5	41	115	156	62	**RBC3038T**		**RBC6038T**	
	90	350	1/2"	85	32	10.5	37	94	25	52	115	167	63.5	**RBC3012T**		**RBC6012T**	
	120	250	3/4"	85	32	10.5	37	94	25	52	115	167	63.5	**RBC3034T**		**RBC6034T**	
	180	220	1"	98	32	11	50	115	31.5	64	130	194	90	**RBC3100T**		-	
Valves with 4 openings	60	300	3/8"	77	54	8.5	27	77	24	39	115	154	70	**RBC4038T**	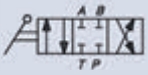	-	
	90	250	1/2"	90	68	8.5	32	90	28	45	120	165	80	**RBC4012T**		-	
	120	220	3/4"	95	74	8.5	38	93	32	48	125	173	90	**RBC4034T**		-	

Type of ball	Position 1	Position 2	Position 3
T	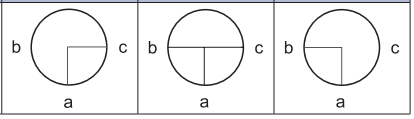		

Single valve

Double valve

Single valve, 3-way

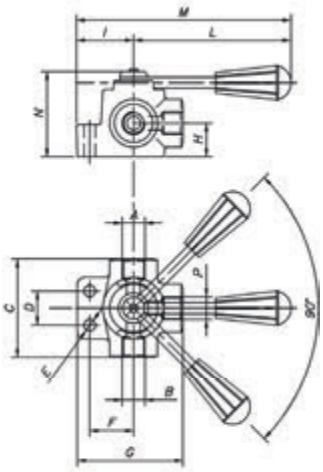

Single valve, 4-way

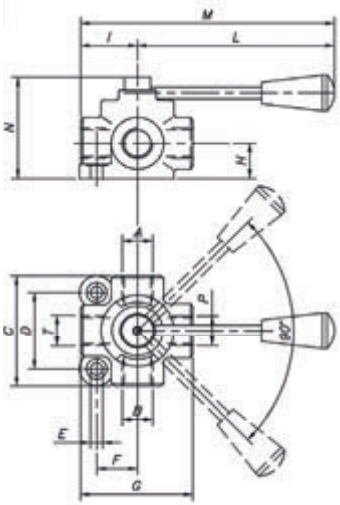

Double valve, 3-way

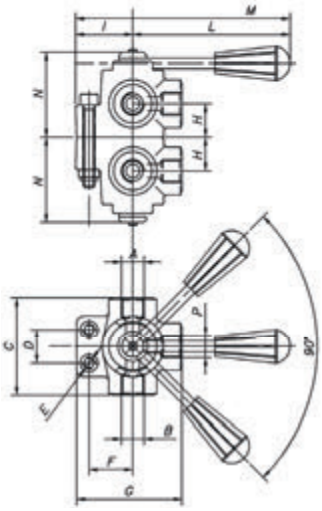

BALL VALVES, 2 PORTS

Thread (BSP)	DN (mm)	Max. pressure (bar)	L (mm)	B (mm)	a (mm)	d (mm)	L1 (mm)	B2 (mm)	H (mm)	H1 (mm)	H2 (mm)	H4 (mm)	SW (mm)	M	S (mm)	H9 (mm)	K (mm)	Reference
1/4 BSP	6	500	69	26	5	4,5	36,2	26	43,4	32	12,8	11	9	M5	3	36	107	**RBS2014**
3/8 BSP	10	500	73	32	5	6,5	43,2	32	49,2	38	16,25	10,9	9	M5	3	36	107	**RBS2038**
1/2 BSP	13	500	85	37,5	4,8	6,5	48,2	35	51,2	40	17,25	10,9	9	M5	3	36	107	**RBS2012**
3/4 BSP	20	400	96	45	6,5	6,5	62,2	49	73,4	57	24,5	16	14	M6	4	65	165	**RBS2034HP**
1" BSP	25	350	113	55	6	6,7	66,2	60	76,6	60	26,5	16	14	M6	4	65	165	**RBS2100**
1" 1/4 BSP	25	350	113	55	6	6,7	66,2	60	76,6	60	26,5	16	14	M6	4	65	165	**RBS2114**

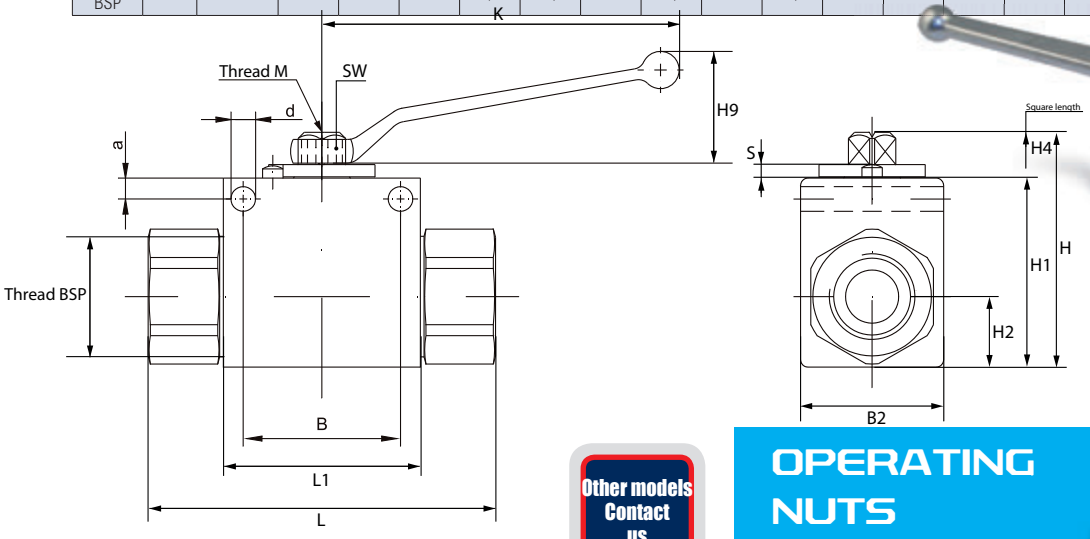

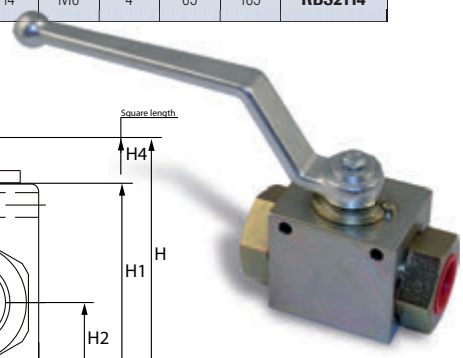

Other models Contact us

OPERATING NUTS

Valves	Reference
1/4", 3/8", 1/2"	**71070166**
3/4", 1", 1/4"	**71070165**

BALL VALVES, 3 PORTS

Standard model

Supply (BSP)		Maximum pressure (bar)	LW	L	l	b	B	H	h	m	S	V	SW	K	i	d	Weight (kg)	Reference
1/4"	DN6	500	6	69	40	13	29	47	33	13.5	34.5	11	9	115	14	1/4" BSP	0.46	**RBS3014L**
3/8"	DN10	500	10	72	43	16	35	52	38	17.5	36	11	9	115	14	3/8" BSP	0.6	**RBS3038L**
1/2"	DN13	500	13	83	48	17.5	38	54	40	19	41.5	11	9	115	16.3	1/2" BSP	0.7	**RBS3012L**
3/4"	DN20	315	20	95	62	24.5	52	75	57	24.5	47.5	14	14	115	18	3/4" BSP	1.8	**RBS3034L**
1"	DN25	315	25	113	66	29	61	83	65	29.5	56.5	14	14	173	20	1" BSP	2.4	**RBS3100L**
1" 1/4	DN25/32	315	25	120	66	29	58	83	65	29.5	60	14	14	173	22	1"1/4 BSP	2.64	**RBS3114L**

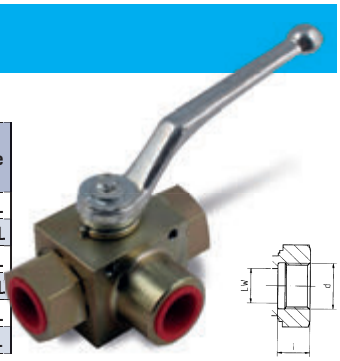

Type of ball	Position 1	Position 2	Position 3
L	b c a	b c a	b c a

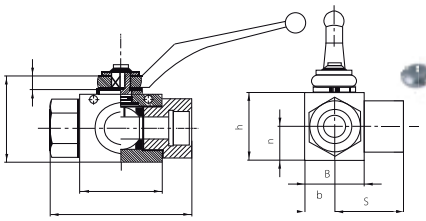

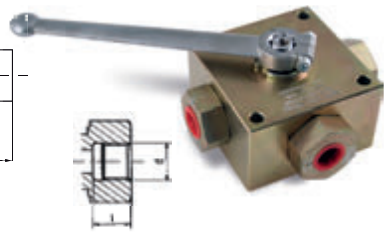

Reinforced model

- Enables pressure to be maintained on all ports.

Supply (BSP)		Maximum pressure (bar)	LW	L	a	H	h	m	K	V	SW	i	d	d1	Weight (kg)	Reference
1/4"	DN6	500	5	100	55	58	40	22	160	13	12	14	1/4 BSP	6.5	1.6	**RBS3014LE**
3/8"	DN10	500	8	115	65	68	50	27	200	14	14	14	3/8 BSP	6.5	2.7	**RBS3038LE**
1/2"	DN13	400	13	136	80	78	60	31	200	14	14	16.3	1/2 BSP	9	4.9	**RBS3012LE**
3/4"	DN20	315	18	154	85	88	67	36.5	320	16.5	17	18	3/4 BSP	8.5	6.7	**RBS3034LE**
1"	DN25	315	23	172	85	103	82	47.5	320	16.5	17	20	1" BSP	8.5	8.3	**RBS3100LE**

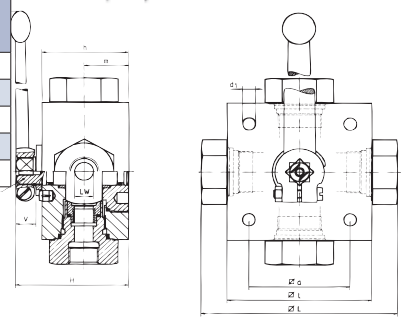

MANUAL MONOBLOCK SPOOL VALVES
DM041 SERIES - 40 L/MIN

Application

- Adaptable on open circuit, closed circuit, and carry-over line.
- Number of sections: 1 to 7.
- Max. flow rate: 40 l/min.
- Max. working pressure: 250 bar.
- Adjustable pressure relief valve: 50 to 250 bar.
- Ambient air temperature: -40°C to +60°C.
- Oil temperature: -15°C to +80°C.
- Mountings P1, P2, T1, T2, N = ½ BSP, A and B = 3/8 BSP.
- Cap on P2, T2 and N provided.

Information on openings

A B	= receiver supply
P1 P2	= supply
T1 T2	= reservoir return
N	= carry over

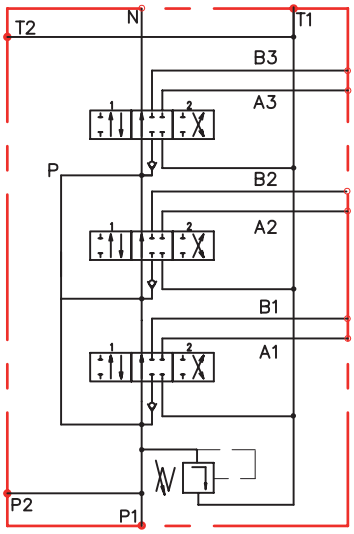

References

- Example reference

Single-acting spool valve	Double-acting spool valve A and B closed	Double-acting spool valve A and B toward T	Double-acting spool valve (float position)	Reference
Type B	Type A	Type C	Type D *	
1	-	-	-	**DM041BM**
-	1	-	-	**DM041AM**
1	1	-	-	**DM041ABM**
1	2	-	-	**DM041A2BM**
1	3	-	-	**DM041A3BM**
1	3	1	-	**DM041A3BCM**
-	1	-	1	**DM041ADM**

Contact us for other references
* Attention: the casting is specific

Number of sections	1	2	3	4	5	6	7
Dimensions C	85	129	164	199	234	269	**304**
Dimensions D	60	97	132	167	202	237	**272**

Dimensions in mm

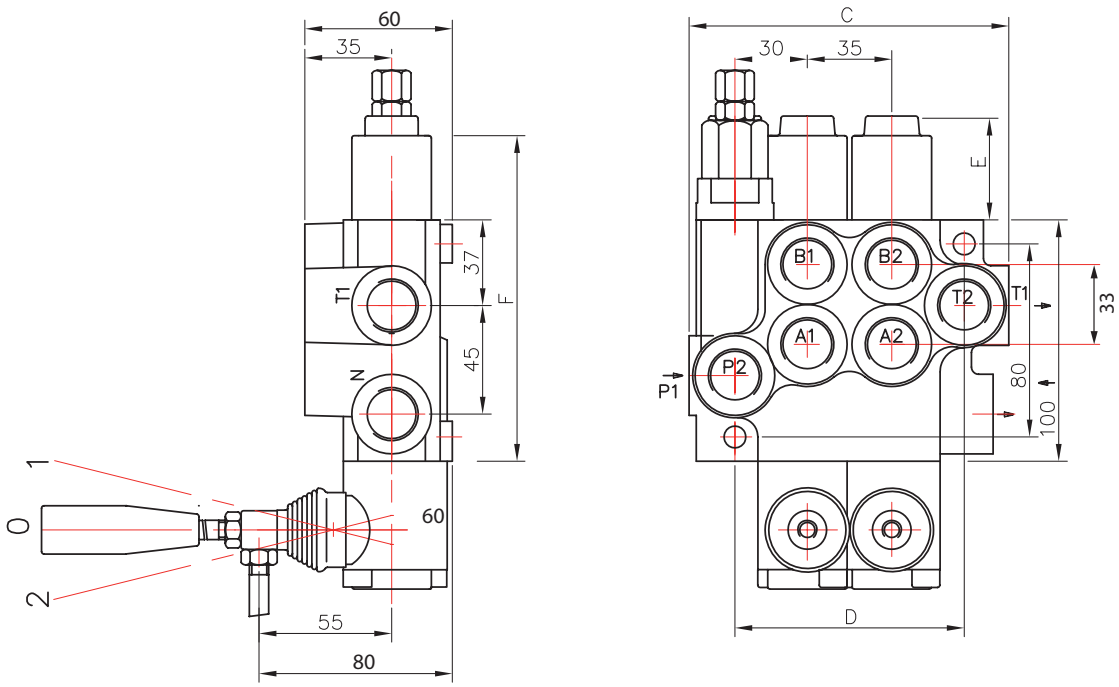

MANUAL MONOBLOCK SPOOL VALVES
DM081 SERIES - 80 L/MIN

Application

- Adaptable on open circuit, closed circuit, and carry-over line.
- Number of sections: 1 to 6.
- Max. flow rate: 80 l/min.
- Max. working pressure: 250 bar.
- Adjustable pressure relief valve: 50 to 250 bar.
- Ambient air temperature: -40°C to +60°C.
- Oil temperature: -15°C to +80°C.
- Mountings T1, T2, T1, T2, N = 1/2 BSP, A and B = 1/2 BSP.
- Cap on P2, T2 and N provided.

Information on openings

A B	= receiver supply
P1 P2	= supply
T1 T2	= reservoir return
N	= carry over

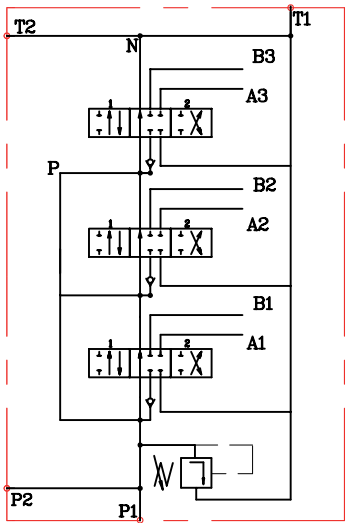

References

- Example reference

Single-acting spool valve	Double-acting spool valve, A and B closed	Double-acting spool valve, A and B toward T	Double-acting spool valve (float position)	Reference
Type B	Type A	Type C	Type D *	
1	-	-	-	DM081BM
-	1	-	-	DM081AM
-	2	-	-	DM081A2M
-	3	-	-	DM081A3M
-	4	-	-	DM081A4M
-	5	-	-	DM081A5M
-	6	-	-	DM081A6M
1	1	-	-	DM081ABM
1	2	-	-	DM081A2BM
-	1	1	-	DM081CAM
-	1	-	1	DM081ADM

Contact us for other references
* Attention: the casting is specific

Number of sections	1	2	3	4	5	6
Dimensions C	107	160	198	242	280	**318**
Dimensions D	65	103	141	179	217	**255**

Dimensions in mm

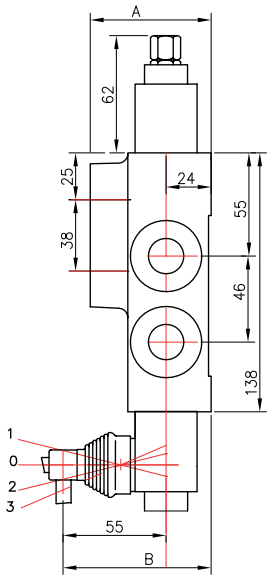

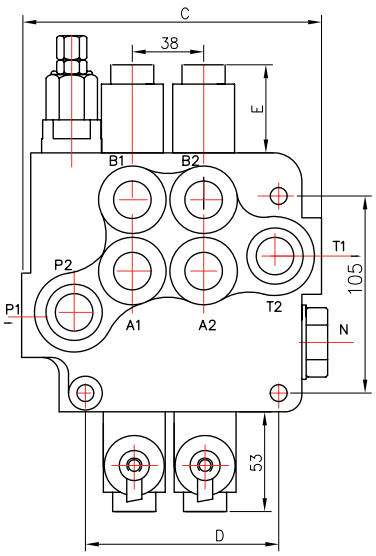

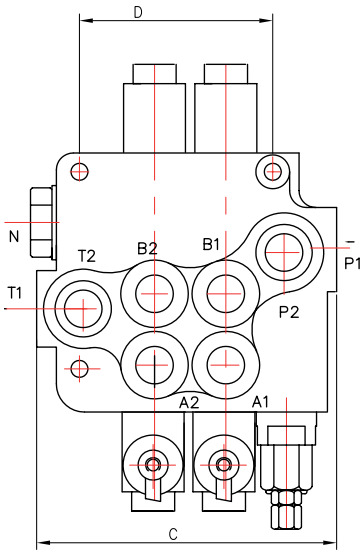

ACCESSORIES FOR MONOBLOCK SPOOL VALVES

Spools

Type of spool valve	Single-acting	Double-acting	Double-acting A and B toward T	Double-acting with float position
	Type B	Type A	Type C	Type D *
Diagram				
DM041 series reference	T041BU	T041AU	T041CU	T041DU
DM081 series reference	T081BU	T081AU	T081CU	N/A

* Attention: the casting is specific; it is not possible to put it in the place of a type A, B or C spool valve

Detent of spool valves

Type of detent	Spring return	Detent when lever pulled	Detent when lever pushed	Detent in both directions	Detent for float position**
Diagram		1 0 2	1 0 2	1 0 2	3 1 0 2
DM041 series reference	C041U	C041V	C041X	C041W	C041D
DM081 series reference	C081U	C081V	C081X	C081W	N/A

** Attention: the casting is specific

Cable adapters

- Adapter for cable, lever side. (provide TC cable, etc.)
  DM041 series: Reference ATCDM041 + control box.
  DM081 series: Reference ATCDM081 + control box.

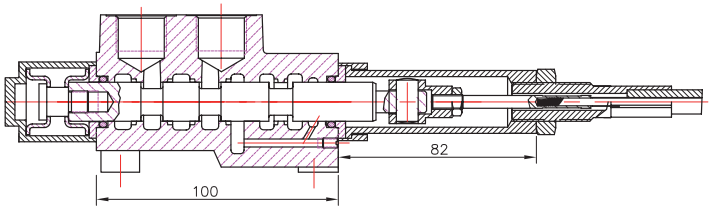

- Adapter for cable, positioner side. (provide TC cable, etc.)
  DM041 series: Reference ATCDM041L + control box.
  DM081 series: Reference ATCDM081L + control box.

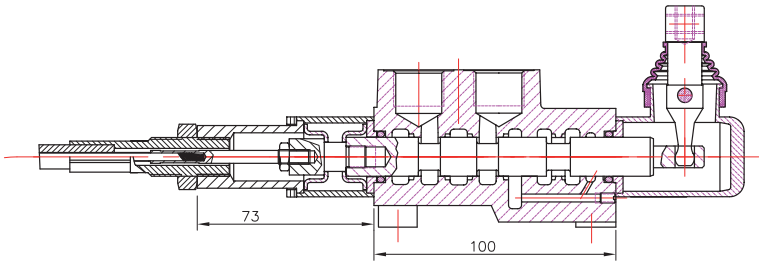

Single levers on spool valve

DM041 series: BCD2DM041
DM081 series: BCD2DM081

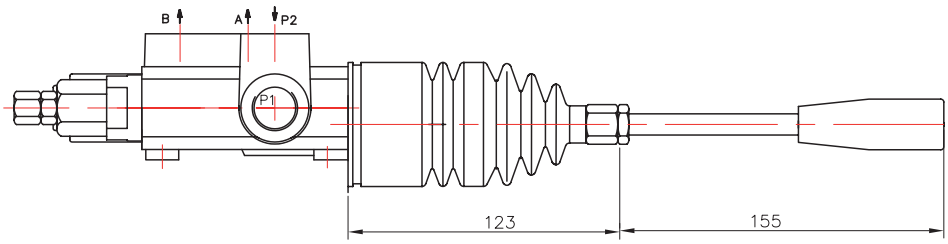

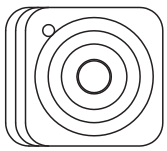

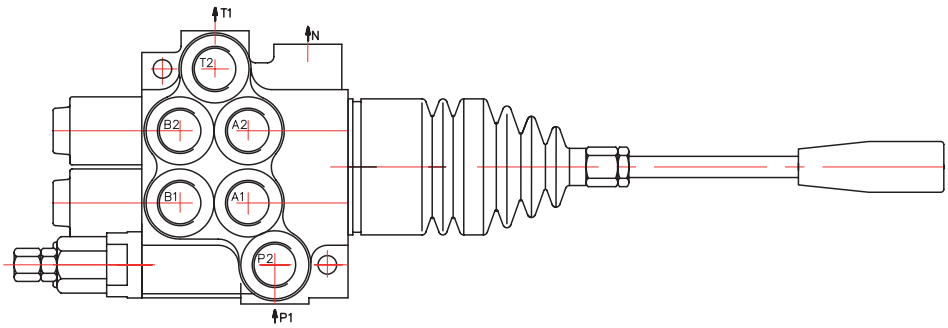

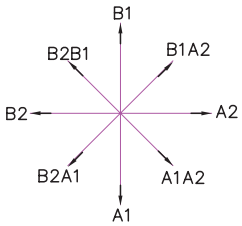

MONOBLOCK SPOOL VALVES
DMO044 SERIES - 45 L/MIN - 1 SECTION

Application

- Adaptable on open circuit or carry over.
- Number of section: 1.
- Max. flow rate: 45 l/min.
- Max. working pressure: 250 bar
- Adjustable pressure relief valve: 50 to 200 bar (other ranges possible).
- Ambient air temperature: -40°C to +60°C.
- Oil temperature: -20°C to +80°C.
- Mountings P, C, T, A and B = 3/8 BSP.

References

Connection type	Max. pressure (bar)	Single acting spool valve	Double acting spool valve			Reference
			A and B closed	A and B towards T	+ float position	
		B	A	C	D*	
Open circuit only	250	1				**DMO044BO**
Carry over only	250	1				**DMO044BS**
Open circuit only	250		1			**DMO044AO**
Carry over only	250		1			**DMO044AS**
Open circuit only	250			1		**DMO044CO**
Carry over only	250			1		**DMO044CS**
Open circuit only	250				1	**DMO044DO**
* Attention: the casting is specific						

Direct hydraulic, pneumatic, or electric control: on request

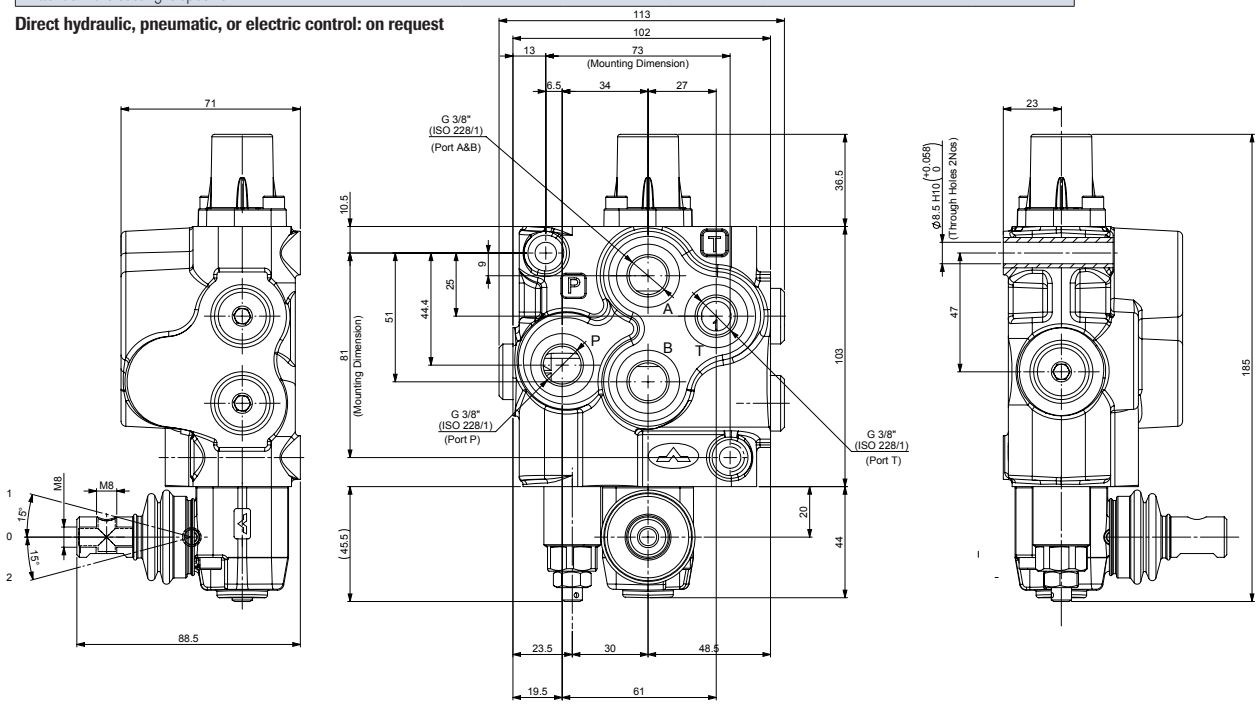

OPTIONS FOR DMO SPOOL VALVES

Description	Reference
Detent in both directions	**C045W**
Detent when lever pushed	**C045X**
Detent when lever pulled	**C045V**
Plug for carry over	**BF045M**
Plug for closed center	**BF045F**
Remote control kit	**ATCDM045**
Standard lever M8x120	**LV045A**
Single lever	**LV045B**
Single lever with grip	**LHV045**
Cross Joystick	**BCD2DM045**

CHOOSE THE CONNECTION TYPE

Carry over
In neutral position, the fluid goes from P to CS to supply the original spool valve.
T : Tank return

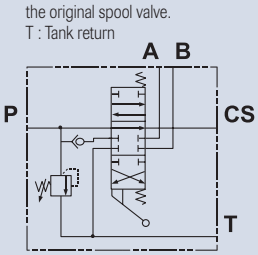

Open circuit
In neutral position, the fluid goes from P to T.
T : Tank return

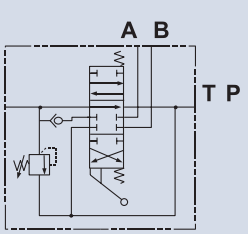

Closed circuit, constant pressure (J. Deere type)
In neutral position, P, A and B are closed.
T : Tank return

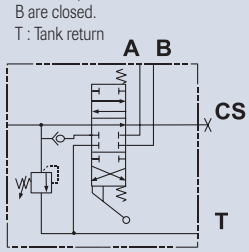

MONOBLOCK SPOOL VALVES
DMO045 SERIES - 45 L/MIN - 2-7 SECTIONS

Application

- Adaptable on open circuit, and carry-over line.
- Number of sections: 2 to 7.
- Max. flow rate: 45 l/min.
- Max. working pressure: 315 bar
- Adjustable pressure relief valve: 50 to 200 bar (other ranges possible).
- Ambient air temperature: -40°C to +60°C.
- Oil temperature: -20°C to +80°C.
- Mountings P, C, T, A and B = 3/8 BSP.

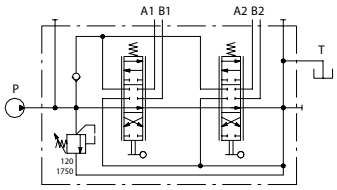

References

Connection type	Max. pressure (bar)	Single acting spool valve	Double acting spool valve			Reference
			A and B closed	A and B towards T	+ float position	
		B	A	C	D*	
Open circuit or carry over	315	2				**DMO045B2M**
Open circuit or carry over	315		2			**DMO045A2M**
Open circuit or carry over	315			2		**DMO045C2M**
Open circuit or carry over	315	1	1			**DMO045ABM**
Open circuit or carry over	315	3				**DMO045B3M**
Open circuit or carry over	315		3			**DMO045A3M**
Open circuit or carry over	315			3		**DMO045C3M**
Open circuit or carry over	315	1	2			**DMO045A2BM**
Open circuit or carry over	315	1	3			**DMO045A3BM**
Open circuit or carry over	315	1	3	1		**DMO045A3BCM**
Open circuit or carry over	315		1		1	**DMO045ADM**
Open circuit or carry over	315		2		1	**DMO045A2DM**
Open circuit or carry over	315		3		1	**DMO045A3DM**
* Attention: the casting is specific						

Number of sections	E (mm)	F(mm)
2	137,5	110
3	174,5	147
4	211,5	184
5	248,5	221
6	285,5	258
7	322,5	295

Direct hydraulic, pneumatic, or electric control: on request

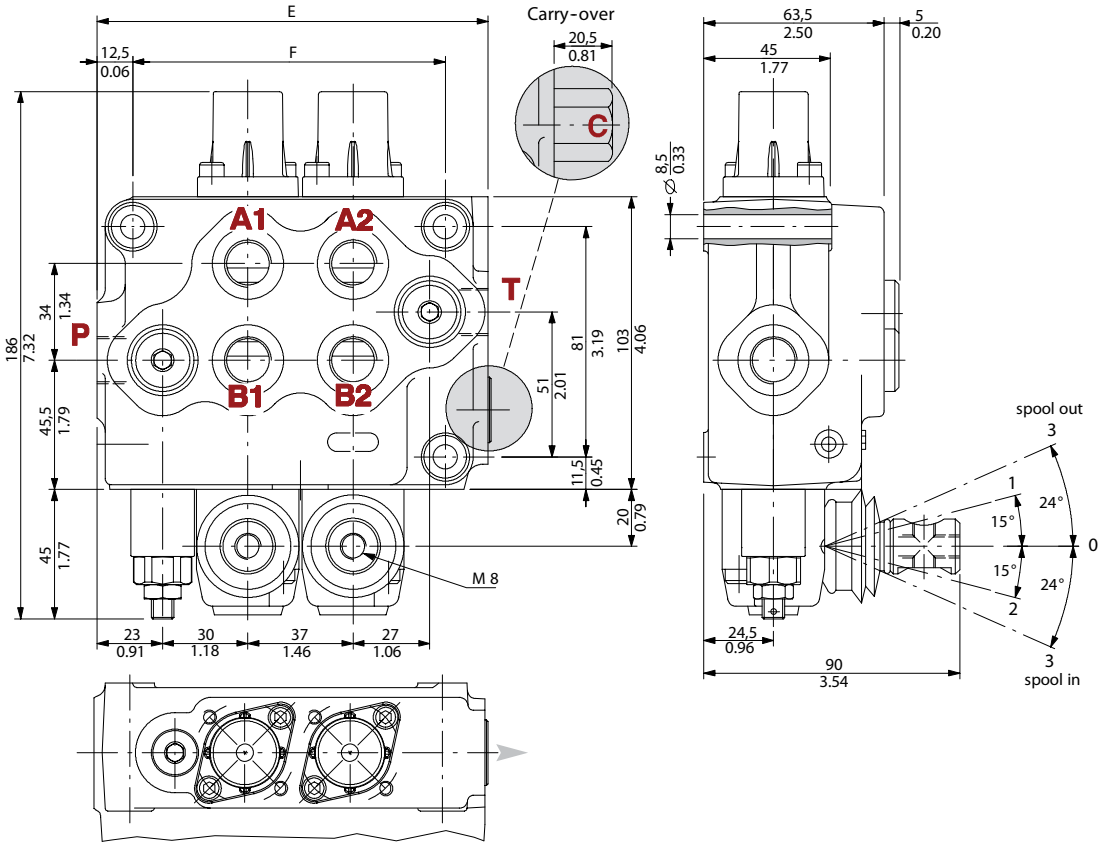

SPOOL VALVES FOR LOG SPLITTER

• Increased speed and productivity: slow speed enables spltting under pressure. Fast speed allows the spltting wedge to approach the timber quickly.

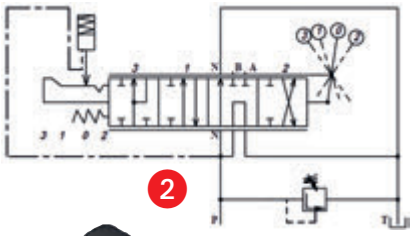

2

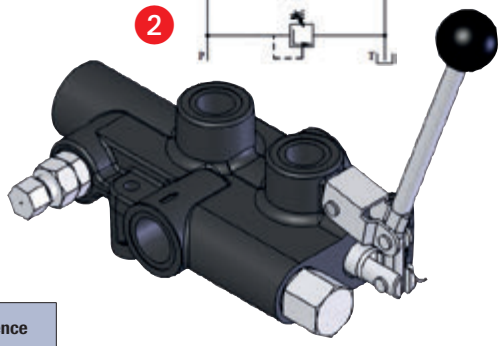

Specifications

- Double-acting spool valve.
- Max. pressure: 250 bar.
- Detent on lifting.
- Open centre only.
- Pressure relief valve.

Specification	Flow rate (l/min)	Mounting	End of stroke		Reference
Single speed	45	3/8	mechanical	1	**DM041FENDE**
Double speed	40	3/8	mechanical	1	**DM041FENDE1**
Double speed	80	P, A, B: 1/2 T: 3/4	mechanical	1	**DM081FENDE**
Double speed + double-acting standard to supply winch	80	P, A, B: 1/2 T: 3/4	mechanical	1	**DM081FENDE2**
Double speed	80	P, T: 3/4 A, B: 1/2	hydraulic	2	**DM081FENDEP**

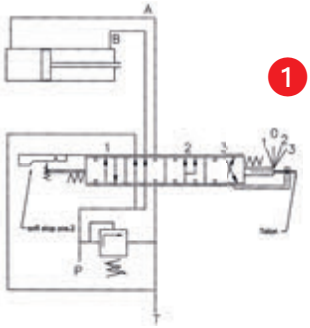

1

DIRECTION CONTROL VALVE IN-LINE OR FLANGE MOUNTED.

Specifications

- Can be flange mounted onto OMP/OMR motors.
- In line mounting.
- Ports 3/8" BSP.
- Cast steel valve.

Reference: DMBR3805F

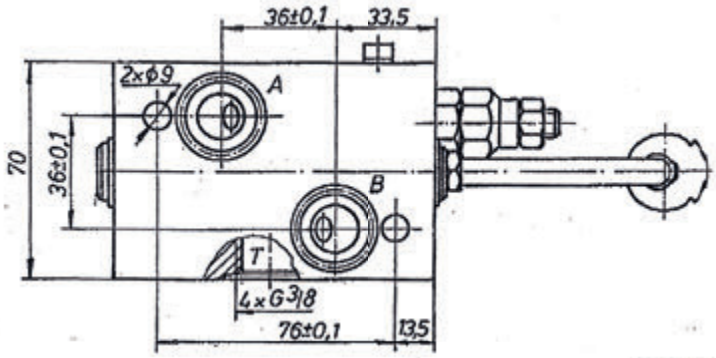

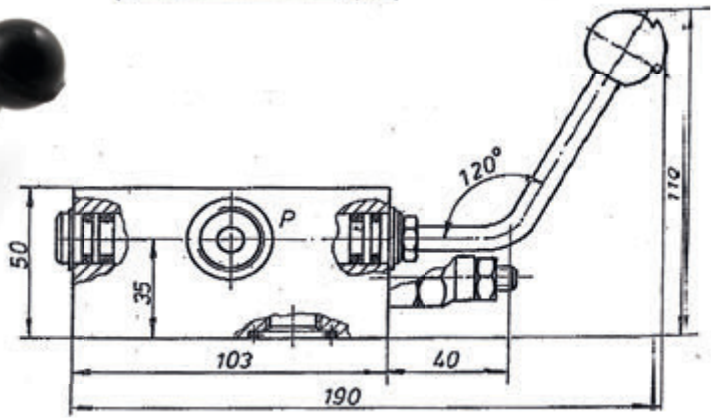

90 L/MIN STACKABLE SPOOL VALVES

Specifications

- Adaptable on open circuit, closed circuit, and carry-over line.
- Nominal flow rate: 90 l/min.
- Adjustable pressure relief valve: 180 to 315 bar.
- Max. counter-pressure on the return: 25 bar.
- Internal leakage (A, B to T at 100 bar): 3 cm^3/min.
- Diameter of the spool valve: 20 mm.
- Stroke of the spool valve: ± 7 mm.
- Mountings (never use conical unions) :
  P, CS, T : 3/4" BSP,
  A, B : 1/2" BSP.

Number of sections	1	2	3	4	5	6
Dimensions E	154	199	244	289	334	379
Dimensions E	71	116	161	206	251	296
Dimensions in mm						

HYDROKIT INFO

For cross control, pneumatic and hydraulic control,

contact us.

Other options Contact us

References

Single-acting B	Double-acting A	Reference with manual control	Reference with hydraulic control
1	-	DEO090B1M	DEH090B1MCAC
-	1	DEO090A1M	DEH090A1MCAC
-	2	DEO090A2M	DEH090A2MCAC
-	3	DEO090A3M	DEH090A3MCAC
-	4	DEO090A4M	DEH090A4MCAC
-	5	DEO090A5M	DEH090A5MCAC
-	6	DEO090A6M	DEH090A6MCAC

Pressure losses

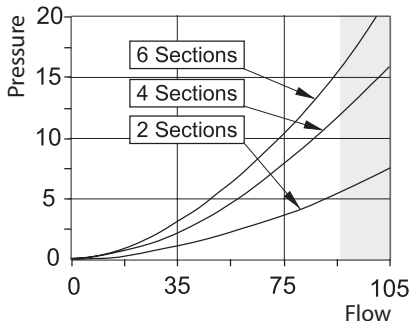

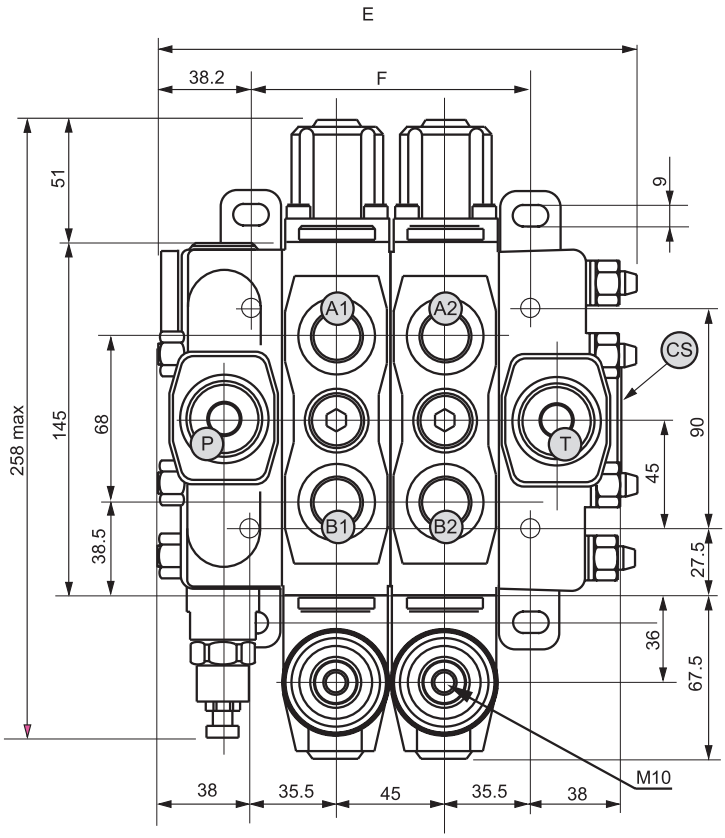

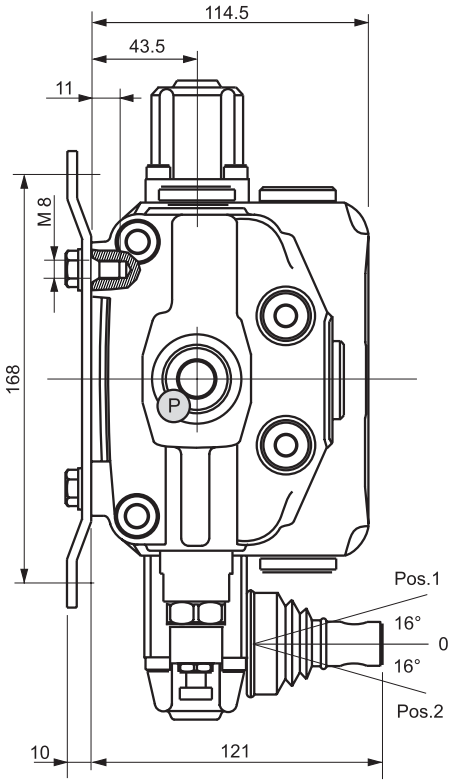

140 L/MIN STACKABLE SPOOL VALVES

Specifications

- Adaptable on open circuit, closed circuit, and carry-over line.
- Nominal flow rate: 140 l/min.
- Adjustable pressure relief valve: 180 to 315 bar.
- Max. counter-pressure on the return: 25 bar.
- Internal seepage (A, B, to T at 100 bar): 3 cm^3/min.
- Diameter of the spool valve: 20 mm.
- Stroke of the spool valve: ± 7 mm.
- Mountings (never use conical unions):
  P, A B : BSP 3/4"
  T, CS : BSP 1".

HYDROKIT INFO

Many options are possible: hydraulic, pneumatic and electrohydraulic control, shock-proof valves, cross control joystick, etc.

contact us.

Number of sections	1	2	3	4	5	6
Dimensions E	176	224	272	320	368	**416**
Dimensions E	124	172	220	268	316	**364**
Dimensions in mm						

References

Single-acting B	Double-acting A	Reference with manual control	Reference with hydraulic control
1	-	**DEO140B1M**	**DEH140B1MCAC**
-	1	**DEO140A1M**	**DEH140A1MCAC**
-	2	**DEO140A2M**	**DEH140A2MCAC**
-	3	**DEO140A3M**	**DEH140A3MCAC**
-	4	**DEO140A4M**	**DEH140A4MCAC**
-	5	**DEO140A5M**	**DEH140A5MCAC**
-	6	**DEO140A6M**	**DEH140A6MCAC**

Pressure losses

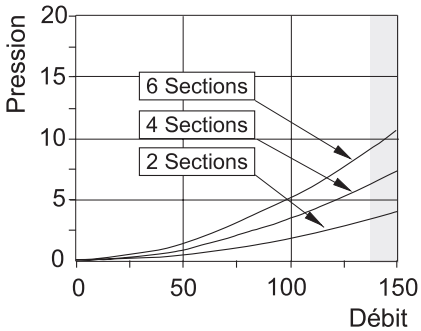

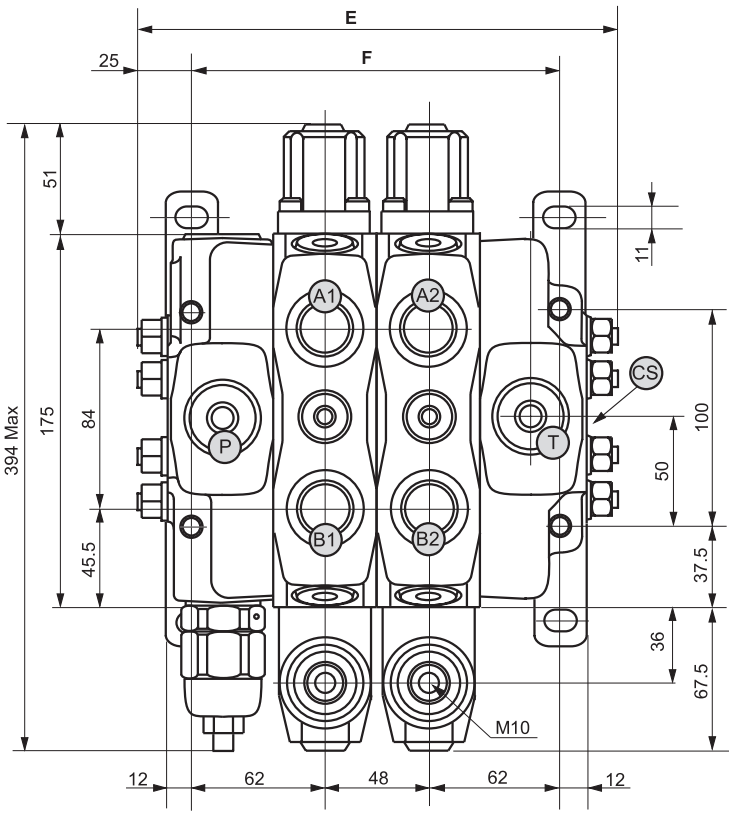

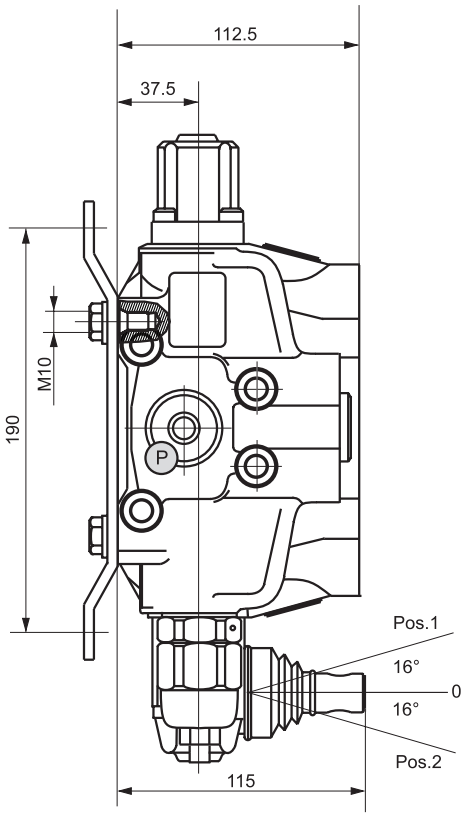

REMOTE CONTROL BOXES

	Control	Number of functions	Reference	Cable reference
1	In-line	1	**BCD1**	**TC...**
2	Cross	2	**BCD2**	**TC...**
3	Cross	2	**BCD2DM7M**	**TC...DM7M**
3	Cross	2 + 1 push button	**BCD2DM7M1**	**TC...DM7M**
3	Cross	2 + 2 push button	**BCD2DM7M2**	**TC...DM7M**

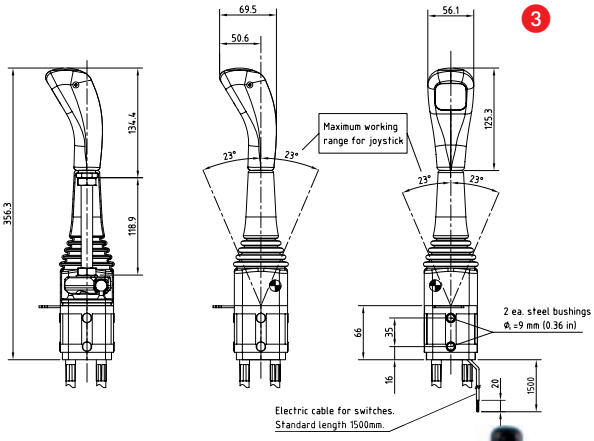

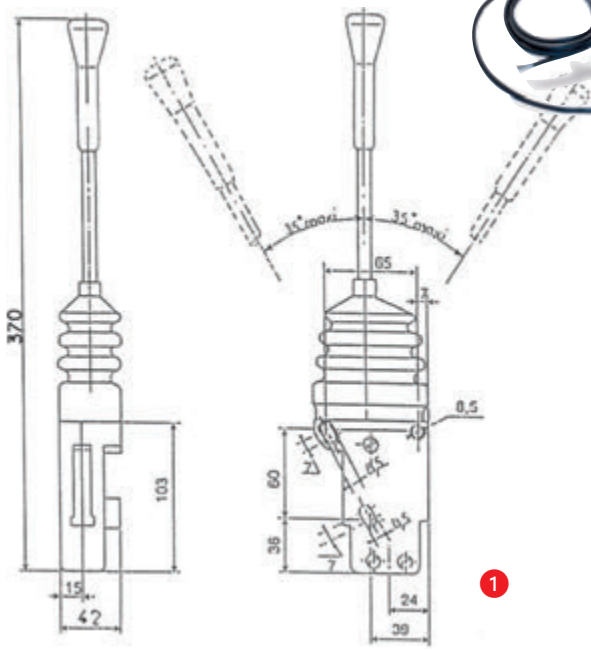

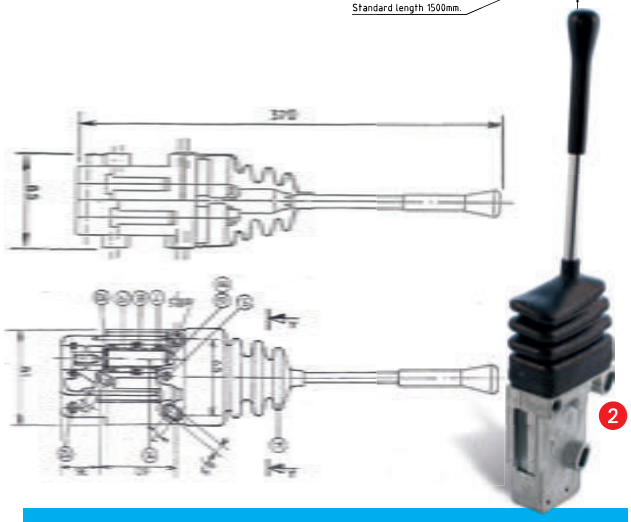

REMOTE CONTROL CABLES

Length (mm)	Reference
1500	**TC1500**
2000	**TC2000**
2500	**TC2500**
3000	**TC3000**

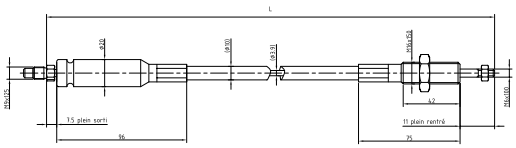

CONTROL CABLES FOR BCD2DM7M

Length (mm)	Reference
1000	**TC1000DM7M**
1500	**TC1500DM7M**
1700	**TC1700DM7M**
2000	**TC2000DM7M**
2500	**TC2500DM7M**

CABLE ADAPTERS

A	B	C		D		E	F	Screw	Seal	For spool valve	Reference
		1	2	1	2						
31	37	15.5	-	8.9	-	20.2	-	-	x	DM035	**ATCDM035**
34	43	-	10	-	8	20	18	x	-	DM041	**ATCDM041**
34	43	-	10	-	8	20	18	x	-	DM081	**ATCDM081**
31	37	17.5	-	8.9	-	20.2	-	-	x	DM085	**ATCDM085**
33.2	45	17.5	-	7.5	-	22.5	-	x	-	DM70	**ATCDM70**
31	37	15.5	-	8.9	-	20.2	-	x	x	DE035	**ATCDE035**
31	37	-	8	-	7.7	20.5	17.9	x	x	DE040	**ATCDE040**
33.2	45	15.5	-	8.8	-	22.5	-	-	-	DE045	**ATCDE045**
31	37	17.5	-	8.9	-	20.2	-	-	x	DE066	**ATCDE066**
33.2	45		9	-	8.7	22.5	17.9	x	-	DE075	**ATCDE075**
33.2	45	17.5	-	9.8		22.5	-	-	-	DE080	**ATCDE080**
40	50	-	9.8	-	9.8	22.7	21.9	x	-	DE115	**ATCDE115**

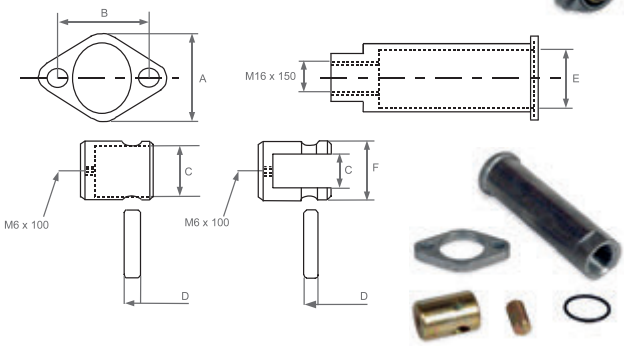

SPOOL VALVE UNIONS AND CONNECTIONS

SPOOL VALVE MODELS	CATALOGUE PAGE	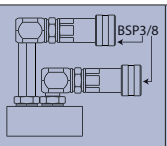	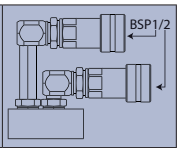	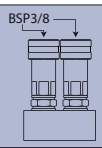	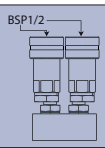
		ELBOW OUTLET + 3/8 BSP COUPLERS	ELBOW OUTLET + 1/2 BSP COUPLERS	STRAIGHT OUTLET + 3/8 BSP COUPLERS	STRAIGHT OUTLET + 1/2 BSP COUPLERS
		Reference DC038G038F001	Reference DC038G012F001	Reference DC038G038F004	Reference DC038G012F002
DM041AM	128	1	1	1	1 (1)
DM041BM		1	1	1	-
DM041ABM		2	2	2	-
DM041A2M		2	2	2	-
DM041A2BM		3	-	-	-
DM041ADM		2	2	2	-
DM041A4M		4	-	-	-
DM041A5M		5	-	-	-
DM041A6M		6	-	-	-
DM041A7M		7	-	-	-
DHEE02....	142	2*	2*	2	2
DHEE03....		3*	3*	3	3
DHEE04....		4* (2)	4*	4	4
DHEE05....		5*	5*	5	5
DHEE06....		6*	6*	6	6
DHEE07....		7*	7*	7	7
E0301 / EL0301	136	1	1	1*	1*
E0302 / EL0302		2	2	2* (3)	2*
E0303 / EL0303		3	3	3*	3*
E0304 / EL0304		4	4	4*	4*
E0305 / EL0305		5	5	5*	5*
E0306 / EL0306		6	6	6*	6*
E0307 / EL0307		7	7	7*	7*
DH240COFH	146	2	2	2*	2*
DH340COFH		3	3	3*	3*
DH440COFH		4 (4)	4	4*	4*
DH540COFH		5	5 (5)	5*	5*
DH640COFH		6	6	6*	6*
DH740COFH		7	7	7*	7*
DH840COFH		8	8	8*	8*
DH940COFH		9	9	9*	9*
DH1040COFH		10	10	10*	10
D31012CZEKO	134	2	2	1 + 1xDC038G038F002	see 50421220KC1 p.132
D32012CZEKO		3	3	2 + 1xDC038G038F002 (6)	2 + 1xDC038G012F003
D33012CZEKO		4	4	3 + 1xDC038G038F002	3 + 1xDC038G012F003
D34012CZEKO		5	5	4 + 1xDC038G038F002	4 + 1xDC038G012F003
D35012CZEKO		6	6	5 + 1xDC038G038F002	5 + 1xDC038G012F003
D51012CZEK		-	-	-	see 50421221KC1
D52012CZEK		-	-	-	2xDC034G012F001 1xDC034G012F002
D53012CZEK		-	-	-	3xDC034G012F001 1xDC034G012F002
D54012CZEK		-	-	-	4xDC034G012F001 1xDC034G012F002
D55012CZEK		-	-	-	5xDC034G012F001 1xDC034G012F002

* Provide sump under the spool valve

HYDROKIT INFO:

The table reads as follows:
For a DM041ABM monoblock spool valve, installation is possible in a 3/8BSP and 1/2BSP elbow outlet, and in a 3/8BSP straight outlet.
For installation in a 3/8 BSP elbow outlet, order 2 kits, DC038G038F001.

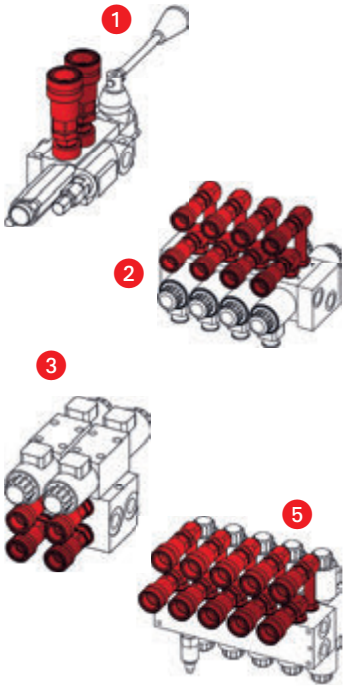

NOUVEAU

Long elbows in 1/2 BSP and 3/8 BSP

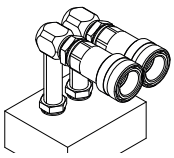

Short elbows in 1/2 BSP and 3/8 BSP

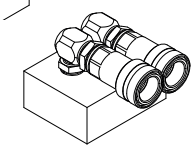

Dimensions Contact us

Other installations, contact us

Headquarters: +33 (0)2 51 34 10 10 / UK: +44 (0)1728 684 800

SOLENOID CHECK VALVES

Cylinder locking.
Free wheeling on a circuit.
Bypass.

- Extremely compact.
- High pressure: steel connection block.
- High flow rate: 150 l/min and upward (contact us).
- Emergency control on normally closed and double closed models.

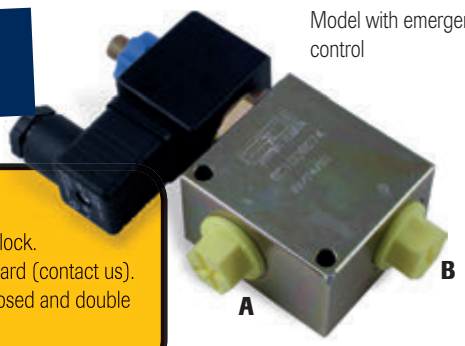

Model with emergency control

Model without emergency control

Emergency control on models NC and DC

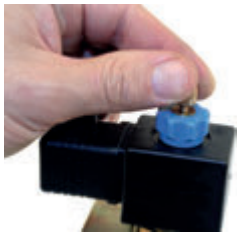

Type (rest position)	Diagram	Mounting	Flow rate (l/min)	Tightening torque (N.m)	Dimensions (mm)							References	
					a	b	c	d	f	g	h	12 V DC	24 V DC
Single, normally open (NO type)	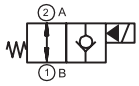	1/4	25	45	50	50	30	**	**	13	34	ENOT0141AE	ENOT0142AE
		3/8	40	45	50	50	30	**	**	13	34	ENOT0381AE	ENOT0382AE
		1/2	70	60	60	65	40	53	6	25	40	ENOT0121AE	ENOT0122AE
		3/4	100	90	80	80	50	65	7.5	31	54	ENOT0341AE	ENOT0342AE
		1"	150	90	80	80	50	65	7.5	31	54	ENOT1001AE	ENOT1002AE
Single, normally closed (NC type)	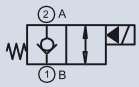	1/4	25	45	50	50	30	**	**	13	34	ENFT0141AE	ENFT0142AE
		3/8	40	45	50	50	30	**	**	13	34	ENFT0381AE	ENFT0382AE
		1/2	70	60	60	65	40	53	6	25	40	ENFT0121AE	ENFT0122AE
		3/4	100	90	80	80	50	65	7.5	31	54	ENFT0341AE	ENFT0342AE
		1"	150	90	80	80	50	65	7.5	31	54	ENFT1001AE	ENFT1002AE
Double, normally open (DO type)	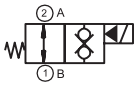	1/4	25	45	50	50	30	**	**	13	34	EDOT0141AE	EDOT0142AE
		3/8	40	45	50	50	30	**	**	13	34	EDOT0381AE	EDOT0382AE
		1/2	70	60	60	65	40	53	6	25	40	EDOT0121AE	EDOT0122AE
		3/4	100	90	80	80	50	65	7.5	31	54	EDOT0341AE	EDOT0342AE
		1"	150	90	80	80	50	65	7.5	31	54	EDOT1001AE	EDOT1002AE
Double, normally closed (DC type)	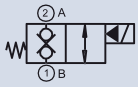	1/4	25	45	50	50	30	**	**	13	34	EDFT0141AE	EDFT0142AE
		3/8	40	45	50	50	30	**	**	13	34	EDFT0381AE	EDFT0382AE
		1/2	70	60	60	65	40	53	6	25	40	EDFT0121AE	EDFT0122AE
		3/4	100	90	80	80	50	65	7.5	31	54	EDFT0341AE	EDFT0342AE
		1"	150	90	80	80	50	65	7.5	31	54	EDFT1001AE	EDFT1002AE

Voltage: 48, 110, 220 V AC, and 48 V DC, contact us

Hydrokit recommendation: Is it necessary to block movement? The solenoid valve is practical, compact, and operates from a minimum of 5 bar (valid for NC and DC models).

Other model with higher flow rate Contact us

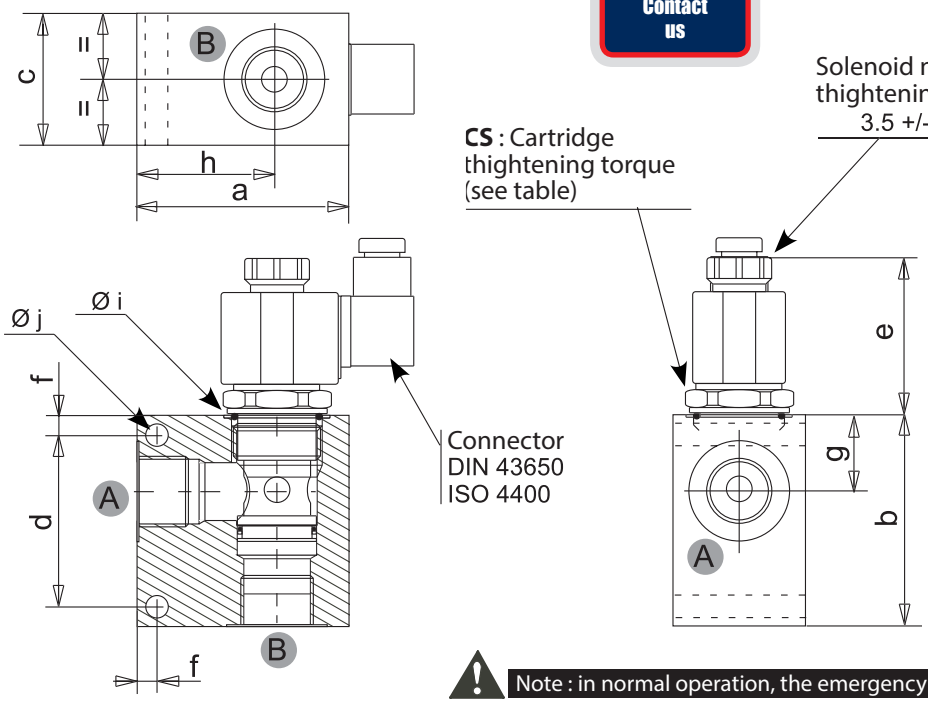

** For 1/4" and 3/8" blocks, the dimensions for the fixing holes are:

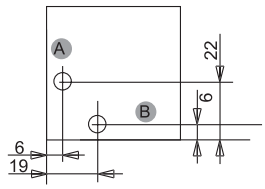

Note : in normal operation, the emergency control screw must be tightenened

SINGLE FUNCTION SELECTORS

Specifications

- The function selector makes it possible to double a function from a single-acting or double-acting spool valve.
- Economical additional function, from just one spool valve.
- Easy to install.

Flow rate (l/min)	Opening (BSP)	Pressure (bar)		Reference 12 V	Reference 24V
		Without drain	With drain		
40	3/8"	210	315	D31012CZEKO	D31024CZEKO
80	1/2"	210	315	D51012CZRK	D51024CZRK
80	3/4"	210	315	D51012CZEK	D51024CZEK

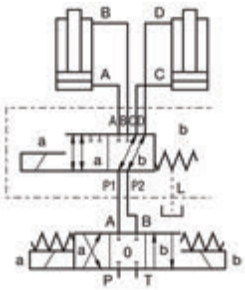

40 l/min version

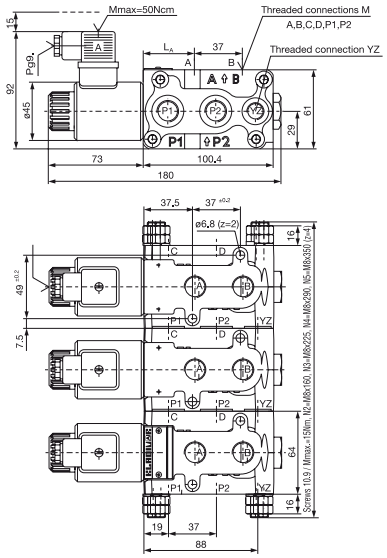

80 l/min version

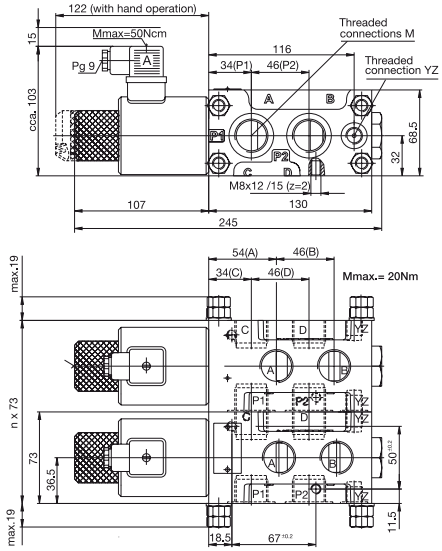

HOW TO EFFECTIVELY CONNECT A SELECTOR KIT

Selector kit connection with 2 double-acting cylinders

- Kit references: D31012CZEKO, D51012CZEKO, 50421220 K, 50421221 K

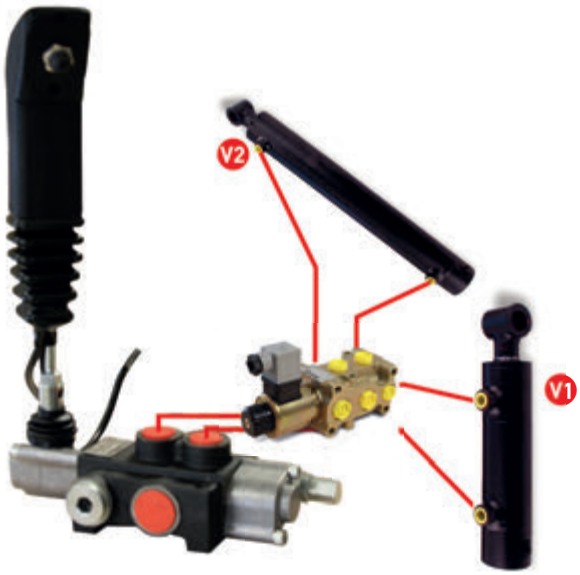

Selector kit connection with 2 double-acting cylinders and 1 single acting cylinder

- Kit references: D33012CZEKO, D53012CZEKO, 50421240 K, 50421241 K

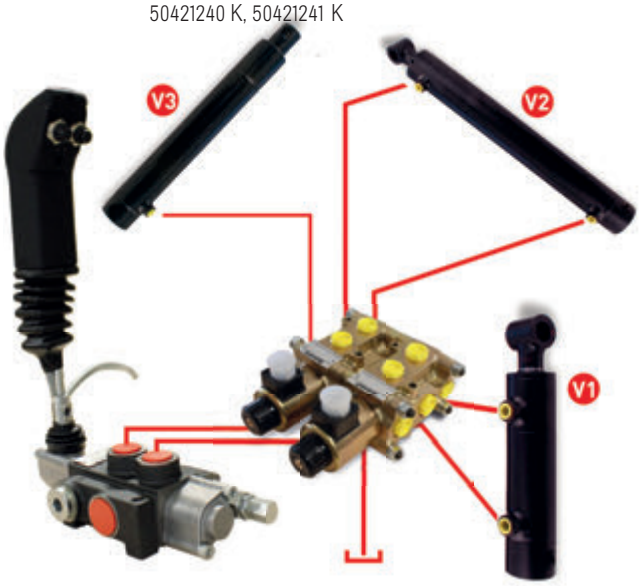

STACKABLE FUNCTION SELECTORS WITH ELECTRIC CONTROL KITS

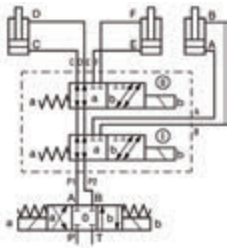

Specifications

- The stackable selector increases the number of functions.
- Up to 5 additional functions from just one spool valve.
- Easy to install, kit is assembled (hydraulic and electric).
- Cable: handle version: 2 m feed, 6 m loom.
- Cable: box version: 1 m feed, 1.60 m loom (optional extensions: 3.20 m, 5 m, 8 m).
- Voltage: 12 V.
- Pressure: 210 bar without drain, 315 bar with drain.

Customised box See page 132

Flow rate	Additional functions	Openings	Selector kit	Handle version	
				Selector kit + handle	Selector kit + handle + couplers
					
40 l/min	1	3/8	D31012CZEKO	50421220K	50421220KC1
	2	3/8	D32012CZEKO	50421230K	50421230KC1
	3	3/8	D33012CZEKO	50421240K	50421240KC1
	4	3/8	D34012CZEKO	50421250K	50421250KC1
	5	3/8	D35012CZEKO	50421260K	50421260KC1
80 l/min	1	3/4	D51012CZEK	50421221K	50421221KC1
	2	3/4	D52012CZEK	50421231K	50421231KC1
	3	3/4	D53012CZEK	50421241K	50421241KC1
	4	3/4	D54012CZEK	50421251K	50421251KC1
	5	3/4	D55012CZEK	50421261K	50421261KC1

Box advantages

Up to 2 additional functions with just one spool valve: just select the desired function from the in-cab box and the operator manipulates the function with the spool valve lever.

The selected function is maintained within the box until the operator decides to deactivate the function.

Box version	
Selector kit + box	Selector kit + box + couplers
	
50421220K02	50421220KC2
50421230K02	50421230KC2
50421240K02	50421240KC2
-	-
-	-
50421221K02	50421221KC2
50421231K02	50421231KC2
50421241K02	50421241KC2
-	-
-	-

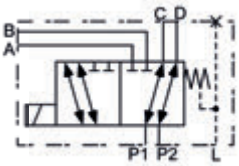

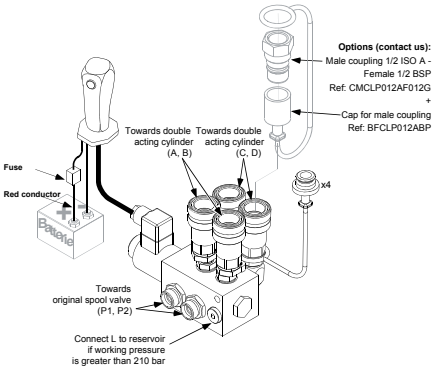

3-FUNCTION SELECTOR CONTROL BOXES

Advantages

- Easy to install, assembled kit.
- Excellent value for money.
- Compact box.

Specifications

- Up to 2 additional functions with a single spool valve.

Description	Reference
Control box with Hydrokit logo	**BSELECT3F1**
Control box without Hydrokit logo	**BSELECT3F2**

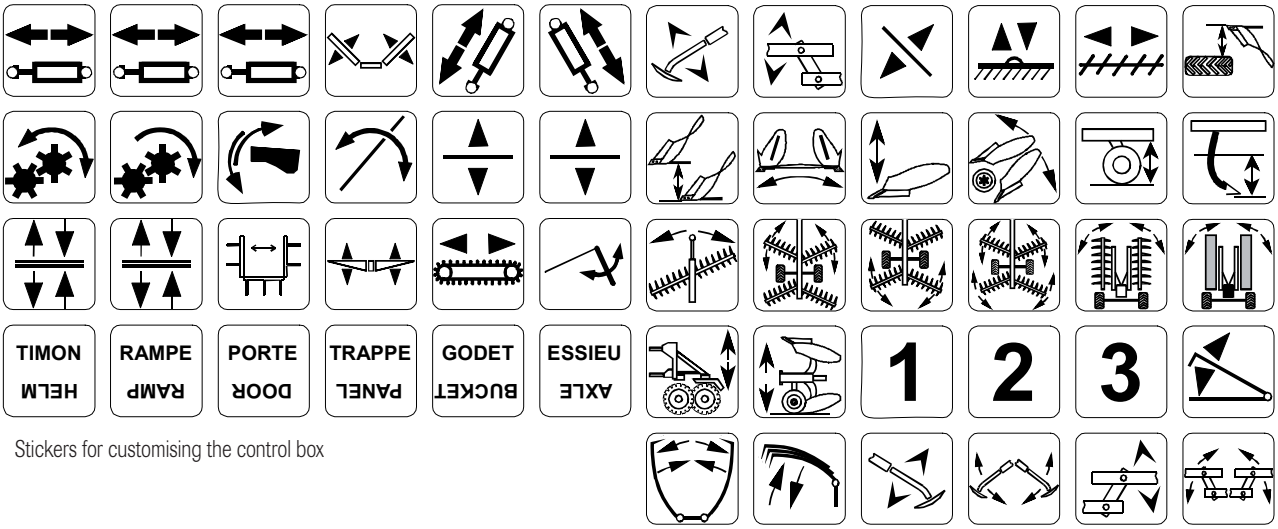

Stickers for customising the control box

180 L/MIN FUNCTION SELECTOR

- Easy connection, no drain.

Flow rate (l/min)	Pressure (bar)	Mountings A, B, C, D, E, F	Voltage (V)	Reference
180	350	3/4 BSP	12	**D51012CZR5**
180	350	3/4 BSP	24	**D51024CZR5**

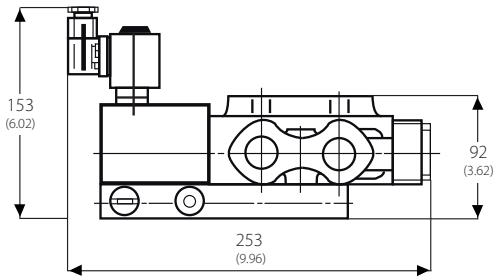

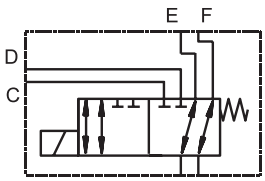

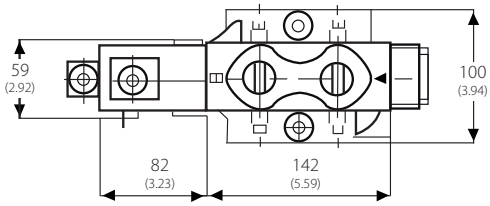

BASE BLOCS FOR CETOP 3 AND 5

Base blocks without pressure relief valve

- These base blocks are designed to accommodate components as well as accessories in CETOP 3 and 5.

Number of stations	CETOP 3			CETOP 5		
	Dimensions (mm)		Reference	Dimensions (mm)		Reference
	X	Y		X	Y	
1	70	58	**E0301**	80	56	**E0501**
2	120	108	**E0302**	160	136	**E0502**
3	170	158	**E0303**	240	216	**E0503**
4	220	208	**E0304**	320	296	**E0504**
5	270	258	**E0305**	400	376	**E0505**
6	320	308	**E0306**	480	456	**E0506**
7	370	358	**E0307**	560	536	**E0507**
8	420	408	**E0308**	640	616	**E0508**

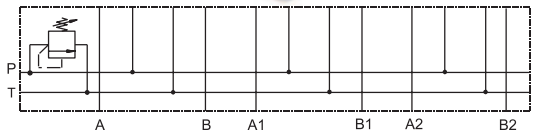

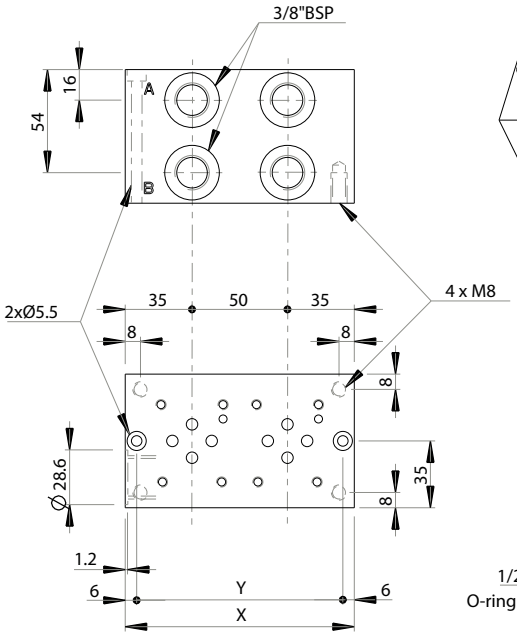

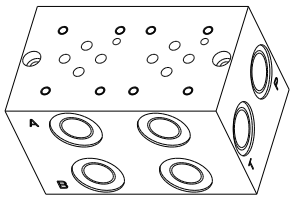

	CETOP 3	CETOP 5
Material	Steel	Steel
Max. working pressure (bar)	300	300
Max. flow rate (l/min)	40	70
P: Pressure	1/2"	3/4"
T: Return	1/2"	1"
A and B	3/8"	1/2"

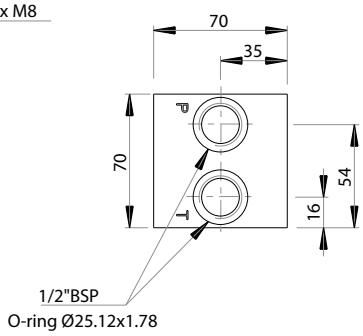

CETOP3

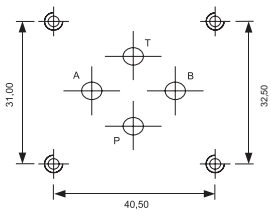

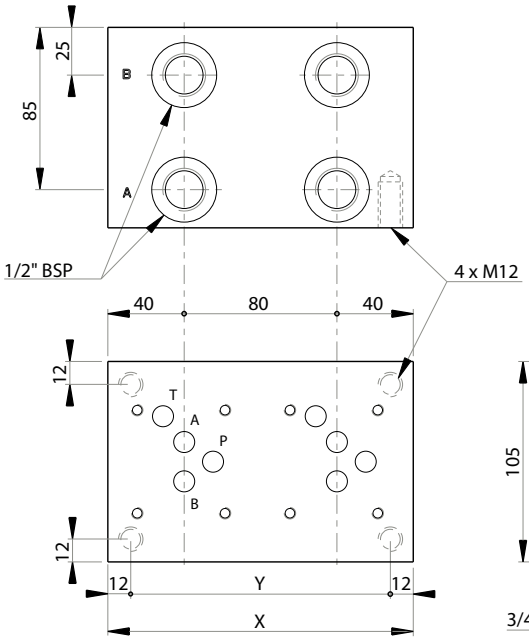

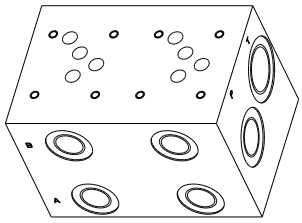

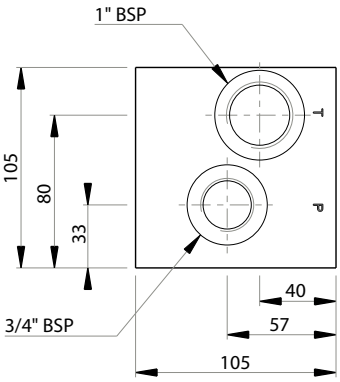

CETOP5

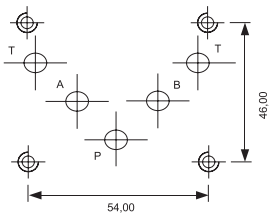

BASE BLOCKS FOR CETOP 3 AND 5 (CONT.)

Base blocks with pressure relief valves

These base blocks are designed to accommodate components as well as accessories in CETOP 3 and 5.

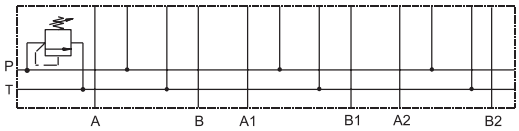

Number of stations	CETOP 3			CETOP 5		
	Dimensions (mm)		Reference	Dimensions (mm)		Reference
	X	Y		X	Y	
1	90	78	**EL0301**	80	56	**EL0501**
2	120	108	**EL0302**	160	136	**EL0502**
3	170	158	**EL0303**	240	216	**EL0503**
4	220	208	**EL0304**	320	296	**EL0504**
5	270	258	**EL0305**	400	376	**EL0505**
6	320	308	**EL0306**	480	456	**EL0506**

	CETOP 3	CETOP 5
Material	Steel	Steel
Max. working pressure (bar)	300	300
Max. flow rate (l/min)	40	70
P: Pressure	1/2"	3/4"
T: Return	1/2"	1"
A and B	3/8"	1/2"

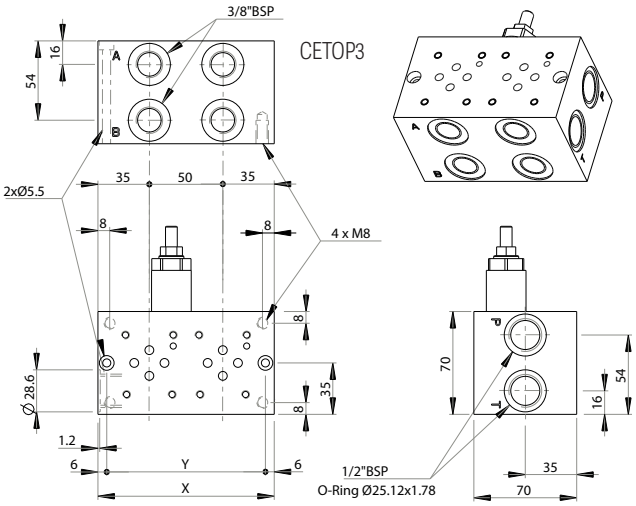

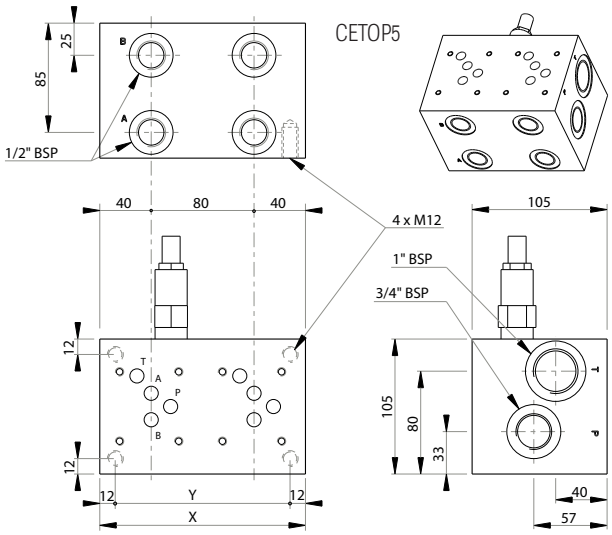

BASE BLOCKS CETOP 3 WITH LATERAL OUTLET

Specifications

- Mounting 3/8 BSP.

Reference: 466389

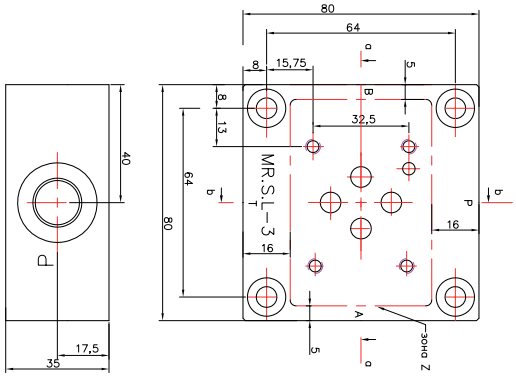

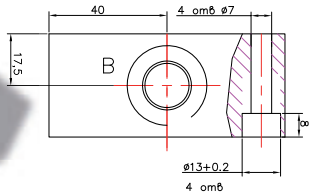

BASE BLOCKS CETOP 3 WITH BOTTOM OUTLET

Name	Mounting	Reference
Base only	1/4	**E0301R014G**
Base block + weld-on fitting	1/4	**E030100001**

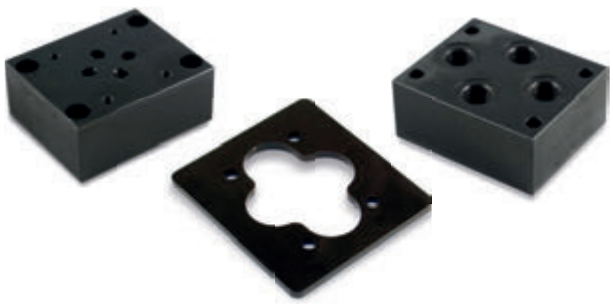

CETOP 3 SPOOL VALVES ELECTRIC CONTROL, ISO 4401

Specifications

- Installation standards ISO 4401, DIN 24340 NG 6.
- Body - zinc bi-chromate plating.
- Either AC or DC, 45 W power.
- Voltage: 12, 24, 48, 110 and 220 V.

Flow rate (l/min)	Max. pressure P-A-B	Max. pressure T
See chart	315	**210**

Symbol	Type of spool valve	Reference 12V	Reference 24V
	C	D31012CCRK	D31024CCRK
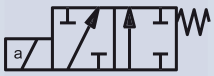	X	D31012CXRK	D31024CXRK
	V	D31012CVRK	D31024CVRK
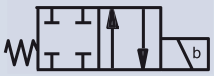	S	D31012CSRK	D31024CSRK
	R	D31012CRRK	D31024CRRK
	P	D31012CPR*	D31024CPR*
	N	D31012CNRK	D31024CNRK
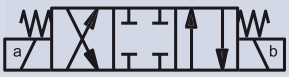	L	D32012CLRK	D32024CLRK
	K	D32012CKRK	D32024CKRK
	J	D32012CJRK	D32024CJRK
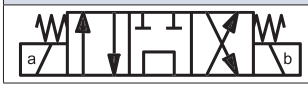	G	D32012CGRK	D32024CGRK

* Negative recovery. Used to divert a flow without risk of overpressure

Movement control (cylinder and motor).

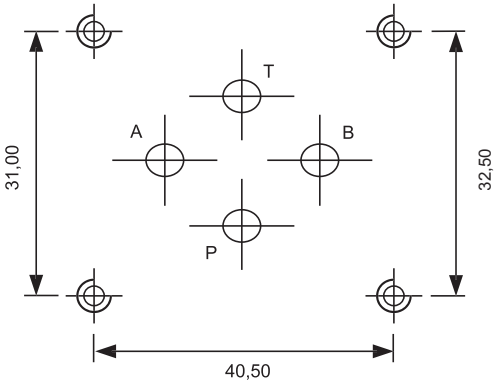

Performance curve according to spool type

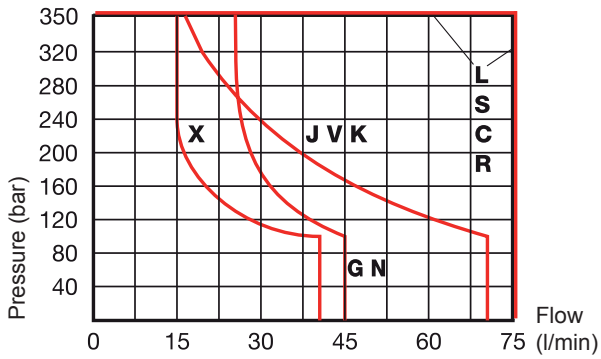

Hydrokit recommendation:

New installation?

Be sure to check the installation flow rate.

For easier ordering,please check the installation standard before contacting us.

Supplied with screws and caps

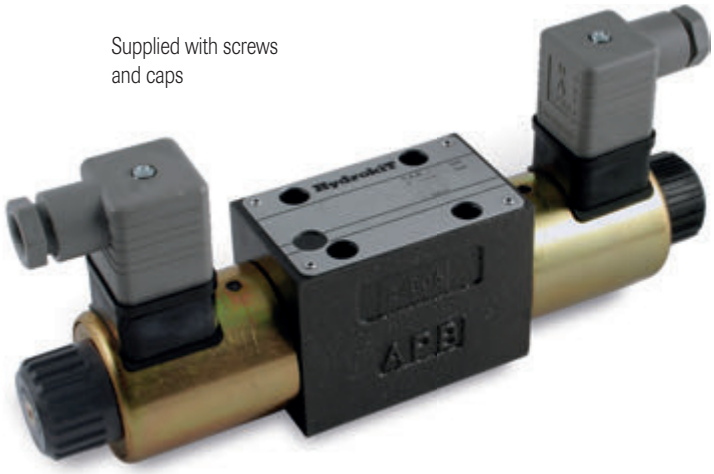

CETOP 5 See page 137

CETOP 7 Contact us

Model with notching Contact us

CETOP 3 SPOOL VALVES ELECTRIC CONTROL, ISO 4401 (CONTINUED)

Dimensions

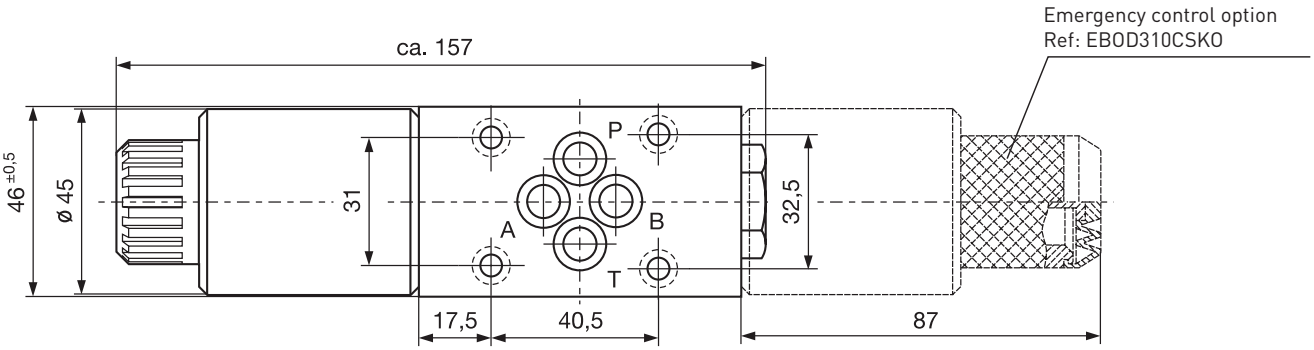

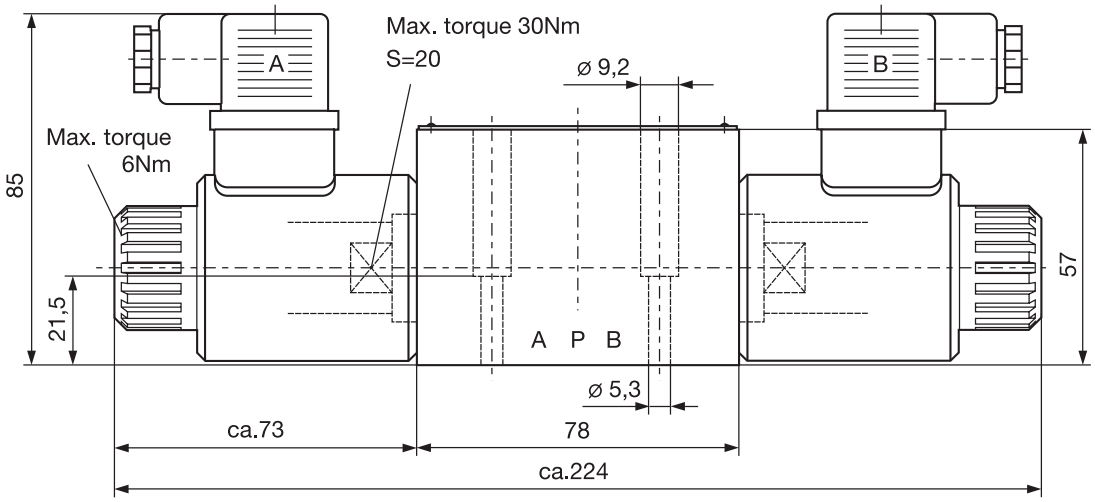

Nozzle option
Ref diameter 0,6 : GPM06D
Ref diameter 0,8 : GPM08D

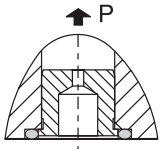

Additional options

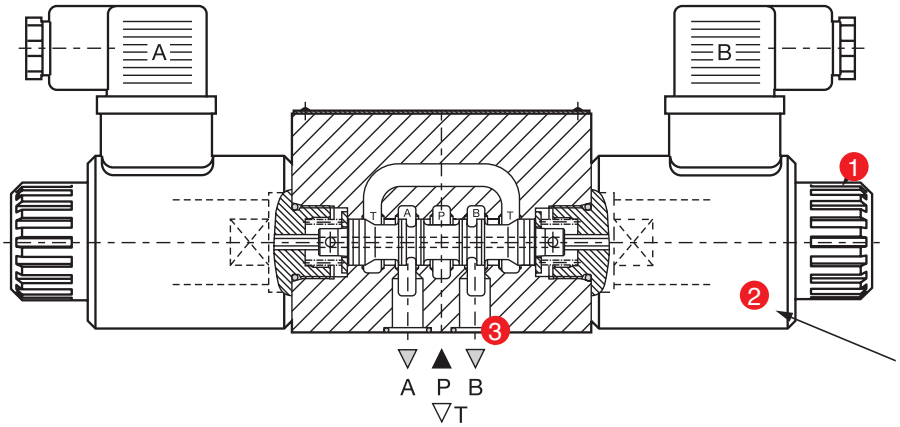

Nut	
Item	Reference
1	EBOED3K10

Coils		
Item	Voltage	Reference
2	12 VDC	E29B2253R012CR1
	24 VDC	E29B2253R024CR1
	24 VAC	E29B2253R024AR1*
	48 VDC	E29B2253R048CR1
	48 VAC	E29B2253R048AR1*
	110 VDC	E29B2253R110CR1
	110 VAC	E29B2253R110AR1*
	220 VDC	E29B2253R230CR1
	220 VAC	E29B2253R230AR1*

* For coils with alternating current, add a rectifier connector, reference CR

O-ring	
Item	Reference
3	V009250178

CETOP 5 SPOOL VALVES ELECTRIC CONTROL, ISO 4401

Specifications

- Installation standards ISO 4401, DIN 24340 NG 10.
- Body - bi-chromate plating.
- Either DC or AC, 45 W power.
- Voltage: 12, 24, 48, 110 and 220 V.

Flow rate (l/min)	Max. pressure P-A-B	Max. pressure T
See chart	315	**210**

Symbol	Type of spool valve	Reference 12V	Reference 24V
	C	D51012CCRK	D51024CCRK
	X	D51012CXRK	D51024CXRK
	V	D51012CVRK	D51024CVRK
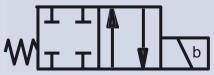	S	D51012CSRK	D51024CSRK
	R	D51012CRRK	D51024CRRK
	P	D51012CPR*	D51024CPR*
	N	D51012CNRK	D51024CNRK
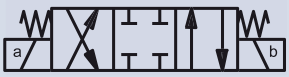	L	D52012CLRK	D52024CLRK
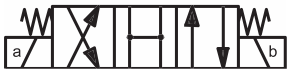	K	D52012CKRK	D52024CKRK
	J	D52012CJRK	D52024CJRK
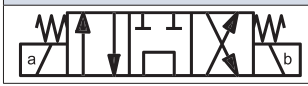	G	D52012CGRK	D52024CGRK

* Negative recovery. Used to divert a flow without risk of overpressure

Movement control (cylinder and motor).

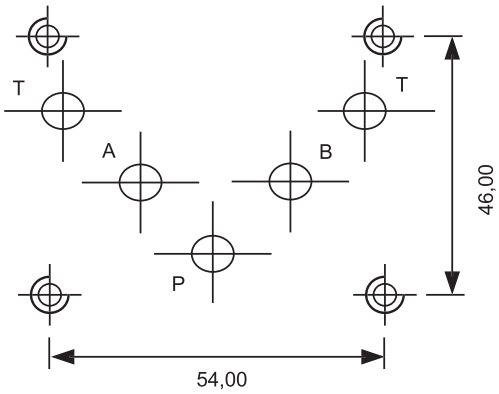

Performance curve according to spool type

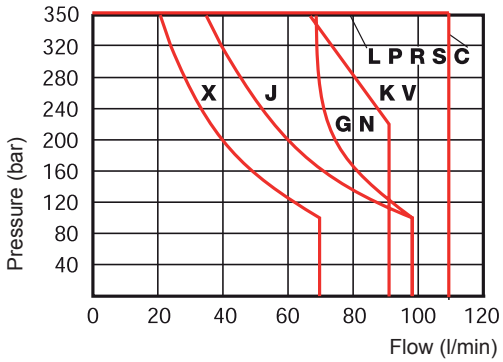

Hydrokit recommendation:

New installation?

Be sure to check the installation flow rate.

For easier ordering, please check the installation standard before contacting us.

Supplied with screws and caps

CETOP 3 See pages 135

CETOP 7 Contact us

Model with notching Contact us

CETOP 5 SPOOL VALVE ELECTRIC CONTROL, ISO 4401 (CONTINUED)

Dimensions

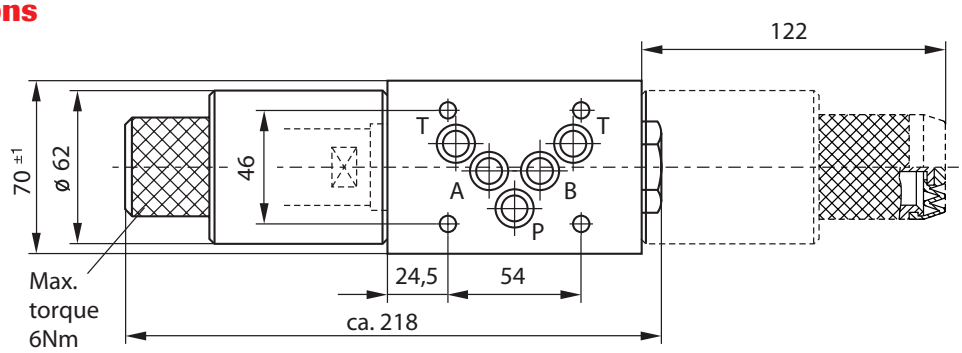

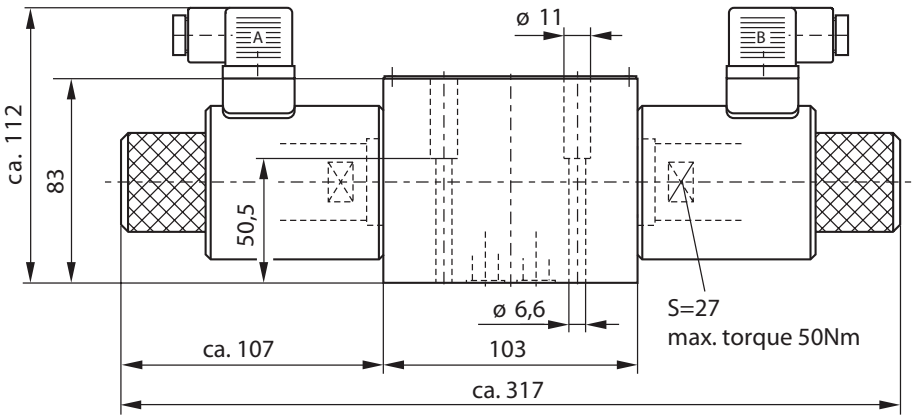

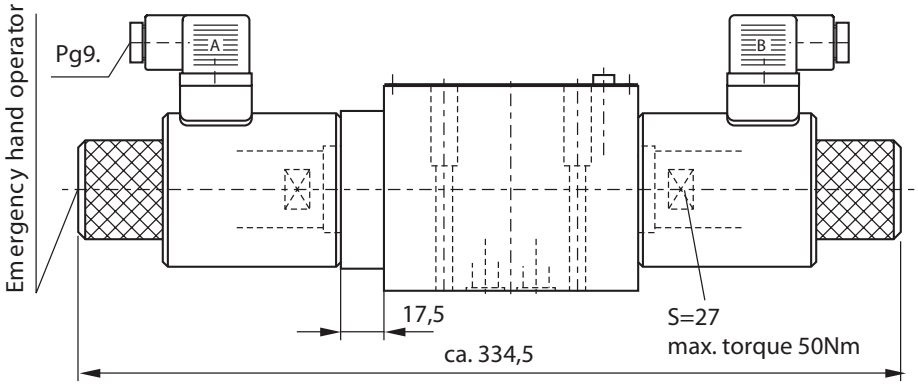

Additional options

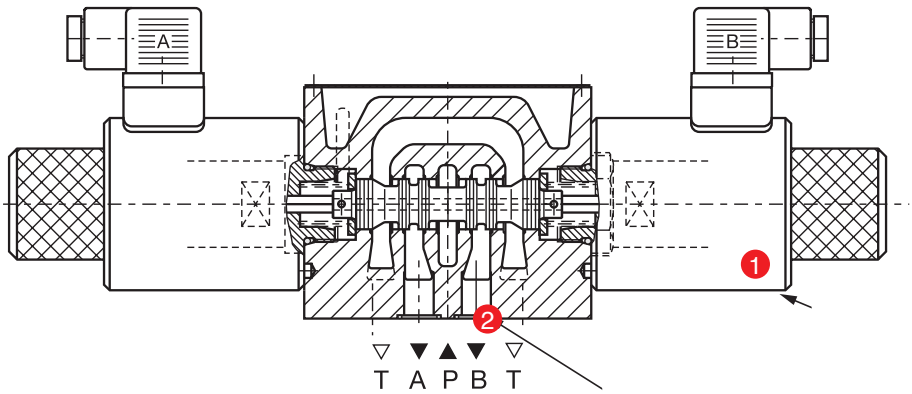

Coils		
Item	Voltage	Reference
1	12 VDC	E29B3172R012CK1
	24 VDC	E29B3172R024CK1
	24 VAC	E29B3172R012AK1*
	48 VDC	E29B3172R048CK1
	48 VAC	E29B3172R048AK1*
	110 VDC	E29B3172R110CK1
	110 VAC	E29B3172R110AK1*
	220 VDC	E29B3172R230CK1
	220 VAC	E29B3172R230AK1*

* For coils with alternating current add, a rectifier connector, reference CR

O-ring	
Item	Reference
2	V012420178

Headquarters: +33 (0)2 51 34 10 10 / UK: +44 (0)1728 684 800

CETOP 3 AND 5 SPOOL VALVES MANUAL CONTROL ISO 4401

Specifications

- Installation standards ISO 4401, DIN 24340 NG 6, NG 10.
- Functions in manual mode.
- With or without detent.

Symbol	CETOP 3 Reference	CETOP 5 Reference
	KOD31000MRR	KOD51000MRR
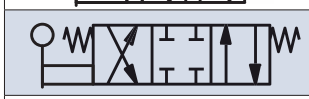	KOD32000MLR	KOD52000MLR
	KOD32000MKR	
	KOD32000MGR	KOD52000MGR
	KOD32000MJR	KOD52000MJR

Size	Flow rate (l/min)	Max. pressure P-A-B (bar)	Max. pressure T (bar)
CETOP 3	60	350	160
CETOP 5	100	350	160

Notched version Contact us

Stackable monoblock spool valves See page 125

CETOP 3

- Performance chart - flow rate / pressure (measured at 50°C and viscosity 32 mm²/s)

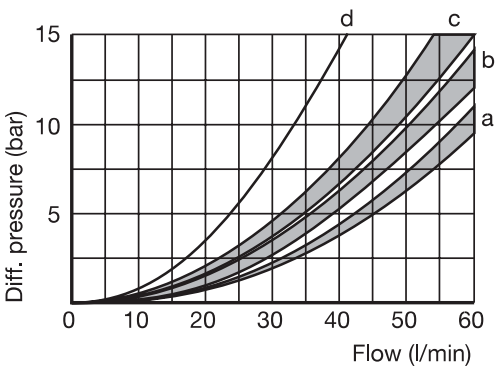

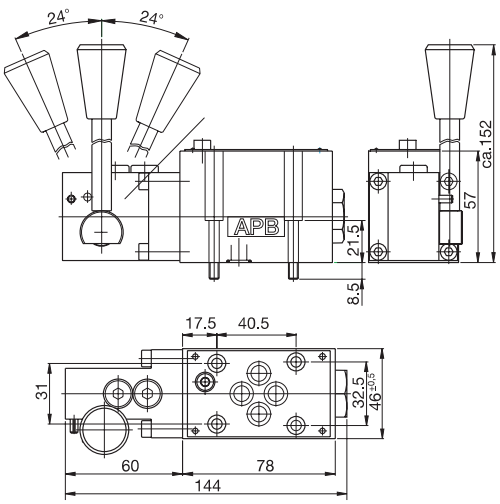

CETOP 5

- Performance chart - flow rate / pressure (measured at 50°C and viscosity 32 mm²/s)

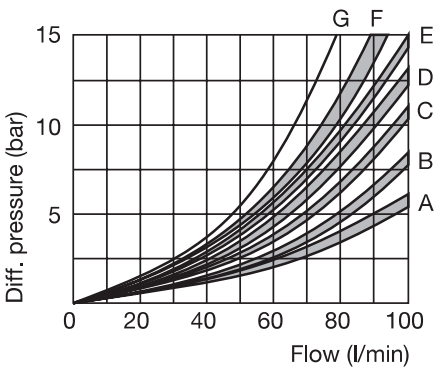

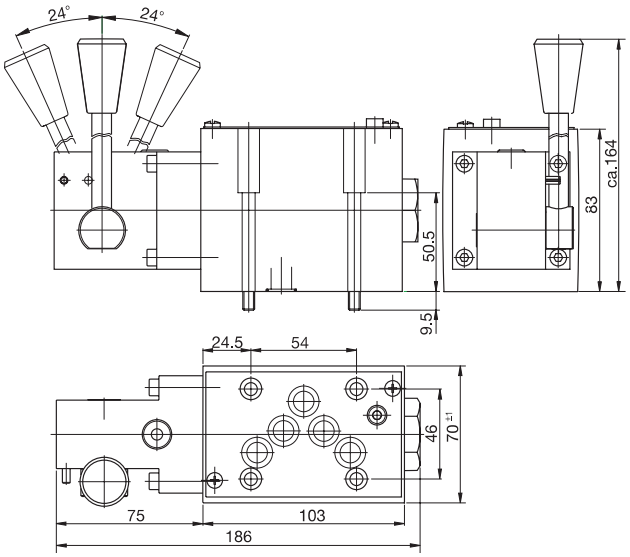

CETOP 3 AND 5 SPOOL VALVES WITH INVERSION

Specifications

- Inversion triggered at the desired pressure (adjustment from 20 to 200 bar).
- Installation standards ISO 4401, NG 10.

Management of the hydraulic cylinder extension and retraction.

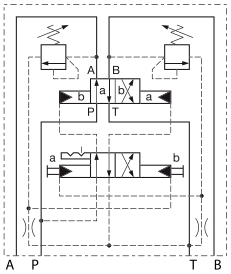

Size	Flow rate (l/min)	Min. working flow rate (bar)	Max. pressure P-A-B (bar)	Max. pressure T (bar)	Min. working pressure (bar)	Inversion pressure (bar)	Reference
CETOP 3	30	0.8	210	160	20	20 to 200	**KOD32000HBI**
CETOP 5	60	0.8	210	160	20	20 to 200	**KOD52000HBI**

CETOP 3

- Performance chart - flow rate / pressure (measured at 50°C and viscosity 32 mm²/s)

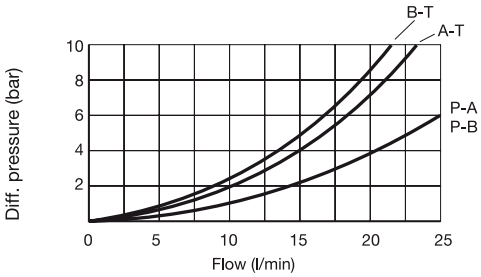

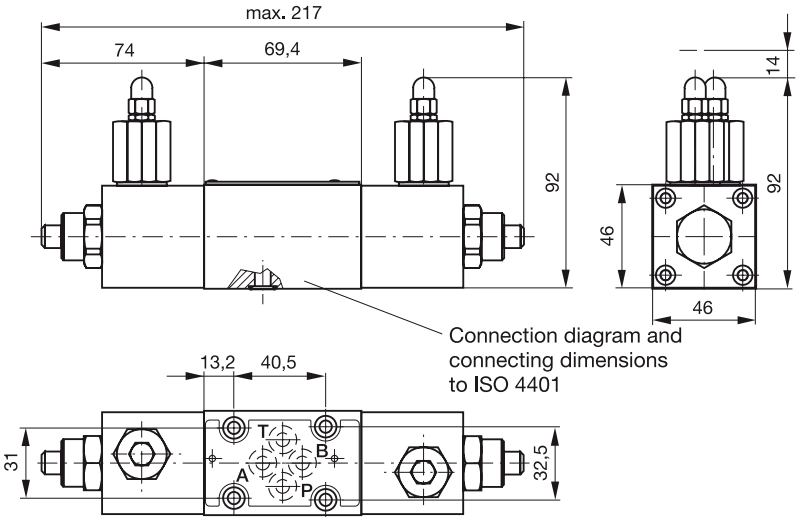

Connection diagram and connecting dimensions to ISO 4401

CETOP 5

- Performance chart - flow rate / pressure (measured at 50°C and viscosity 32 mm²/s)

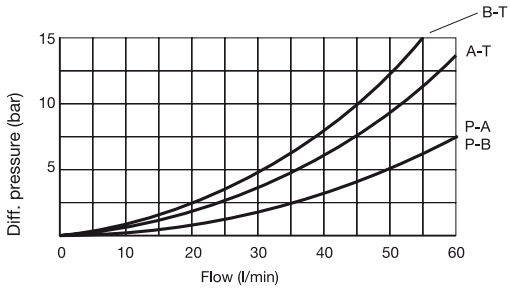

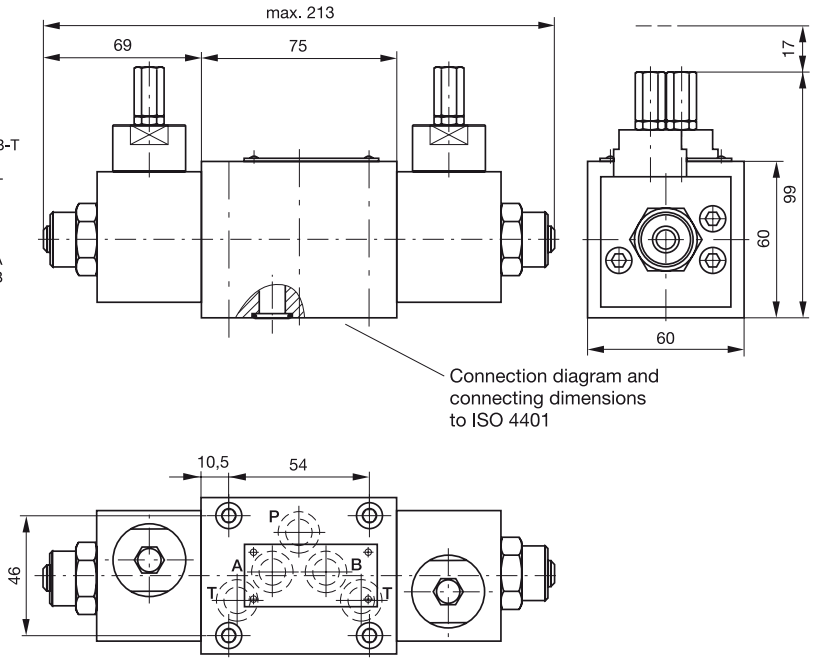

Connection diagram and connecting dimensions to ISO 4401

PRESSURE RELIEF VALVES, MODULAR, CETOP 3 AND 5

Specifications

Pressure adjustment on lines A and B.

- Anti-shock function.
- Mounting between electrohydraulic valve and base block.
- Installation standards ISO 4401 NG6, NG10.

Size	Flow rate (l/min)	Pressure (bar)	Pressure relief valve on opening	L1 (mm)	L2 (mm)	L3 (mm)	L4 (mm)	L5 (mm)	Reference 100 bar max	Reference 315 bar max
CETOP 3	50	315	A T	-	154	-	90	9	**LPM3ATAK**	**LPM3ATBK**
			B T	-	-	154	90	40.5	**-**	**LPM3BTBK**
			P T	-	-	154	90	40.5	**LPM3PTAK**	**LPM3PTBK**
			A and B T	249	-	-	121	40	**LPM3ATBTAK**	**-**
CETOP 5	100	315	B T	-	161	100.5	18	-	**-**	**LPM5BTBK**
			P T	156	-	95.5	28.5	-	**-**	**LPM5PTBK**

Cap screw: CHC05070A x 4

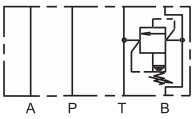

CETOP 3

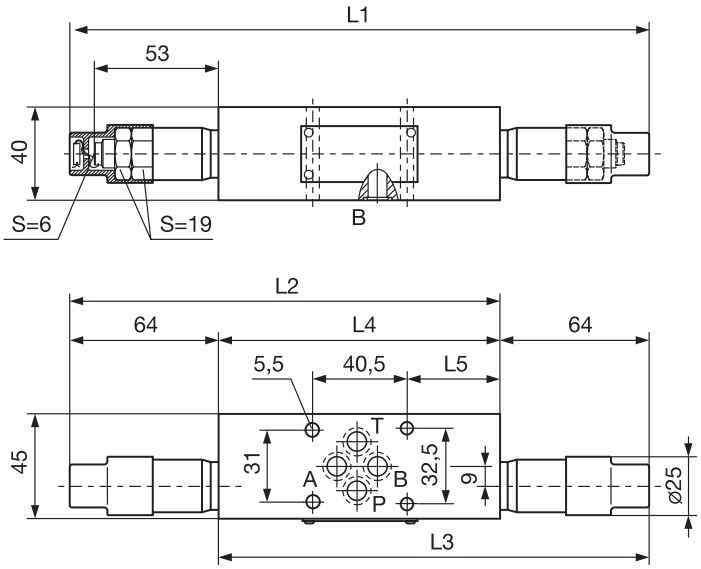

CETOP valves and base blocks from page 133

CETOP 5

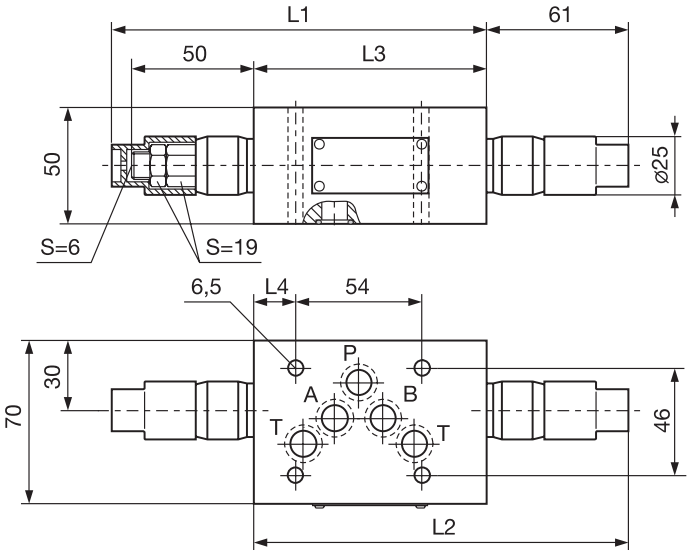

PRESSURE REDUCERS

Specifications

- Mounting between electrohydraulic valve and base block.
- Installation standards ISO 4401 NG6, NG10.

Size	Flow rate (l/min)	Pressure (bar)	Reduction in	Adjustments	Reference
CETOP 3	38	250	P	0.7 to 30	**VRPM03P1**
	38	250	P	3.5 to 70	**VRPM03P2**
	38	250	P	10 to 140	**VRPM03P3**
	38	250	P	20 to 250	**VRPM03P4**
CETOP 5	100	315	P	15 to 315	**VRPM05P2**

Cap screw: CHC05070A x 4

CETOP valves and base blocks from page 133

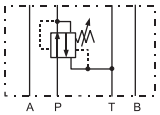

CETOP 3 AND 5 PILOT OPERATED MODULAR CHECK VALVES.

Specifications

- Mounting between electrohydraulic valve and base block.
- Body - zinc bi-chromate plating.
- Installation standards ISO 4401 NG6, NG10.
- Single or double acting blocking.

Function movement blocking in rest position.

Size	Flow rate (l/min)	Max. pressure (bar)	Opening pressure (bar)	Pilot ratio	Blocking function	Reference
CETOP 3	60	350	1	3.9/1	On A	**CPM03AK**
					On B	**CPM03BK**
					On A and B	**CPM03ABK**
CETOP 5	100	350	0.5	3.6/1	On A and B	**CPM05ABK**

Cap screw: CHC05070A x 4

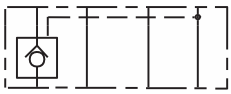

Single check valve

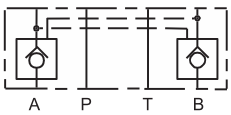

Double check valve

CETOP 3

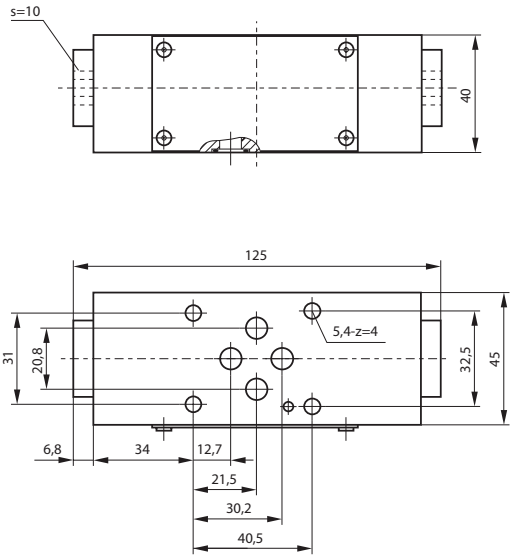

CETOP 5

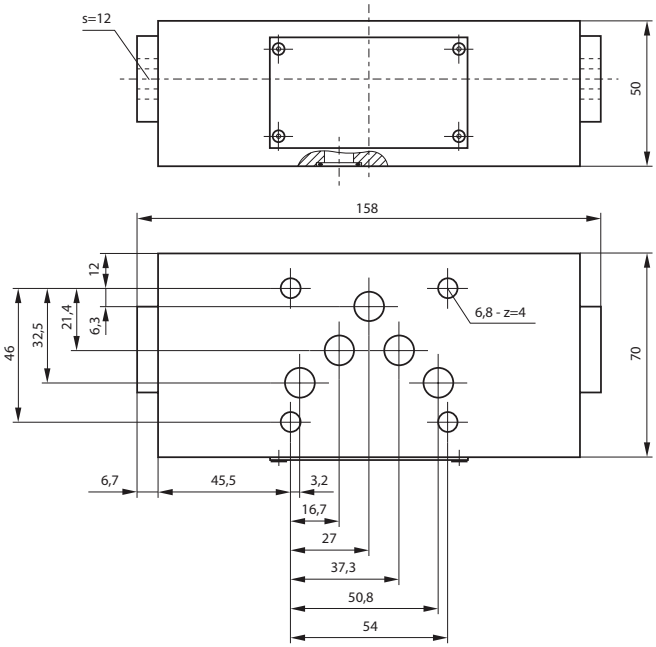

CETOP 3 AND 5 MODULAR FLOW LIMITERS

Specifications

- Mounting between electrohydraulic valve and base block.
- Body - zinc bi-chromate plating.
- Installation standards ISO 4401 NG6, NG10.

Flow rate adjustment on lines A and B (installation for cylinder movement).

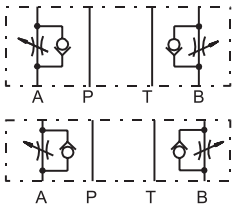

Size	Flow rate (l/min)	Max. pressure (bar)	Opening pressure (bar)	With rotary selector	Reference
CETOP 3	60	315	0.4	No	**VLDM03YABK**
CETOP 3	60	315	0.4	Yes	**VLDM03YABMH**
CETOP 5	100	315	0.4	No	**VLDM05YABK**

Cap screw: CHC05070A x 4

VLDM03YABMH

CETOP 3

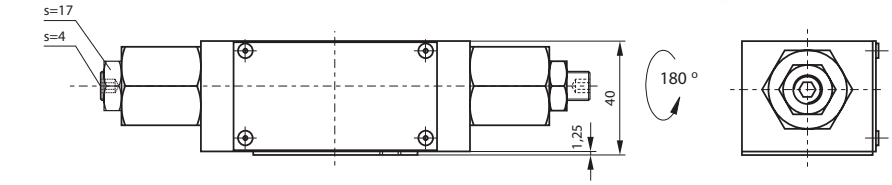

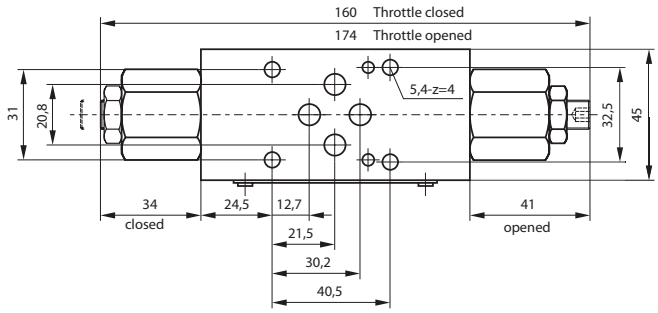

CETOP valves and base blocks from page 133

VLDM05YABK

CETOP 5

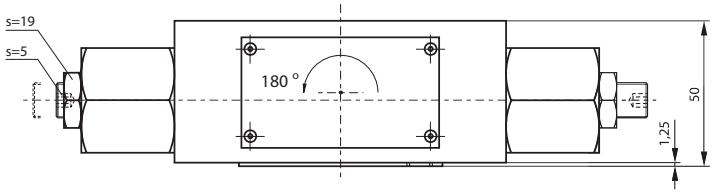

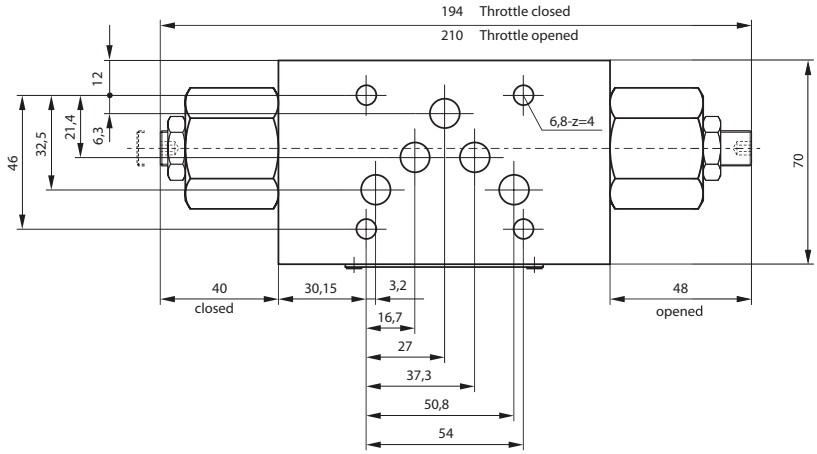

CETOP 3 MODULAR SOLENOID CHECK VALVE

Lock a cylinder in position. Enabling float position.

Specifications

- Installation standards ISO 4401, NG 6.

Voltage (V)	Reference	Diagram
12	ENFM03AB1AE	
24	ENFM03AB2AE	
12	ENFM03A1AE	
24	ENFM03A2AE	
12	EDFM03A1AE	
24	EDFM03A2AE	

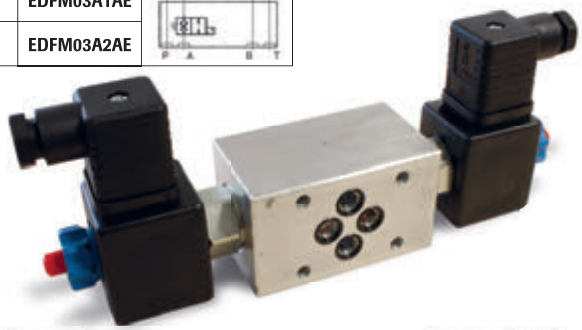

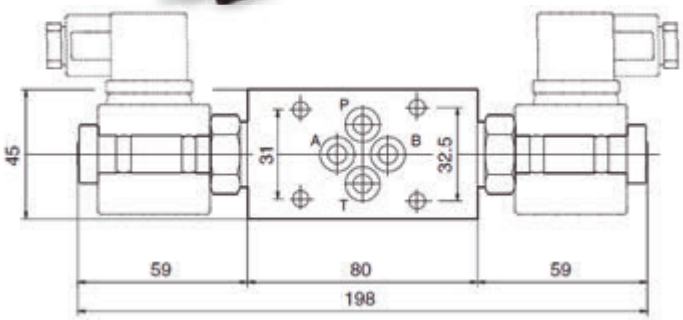

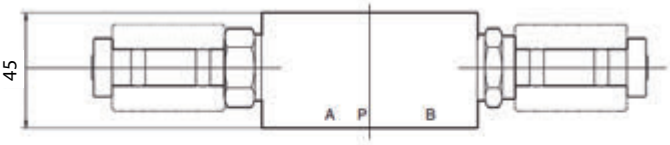

CETOP 3 AND 5 COVER PLATES

- Complete cover plates (supplied with screws)

CETOP 3 reference: PF31

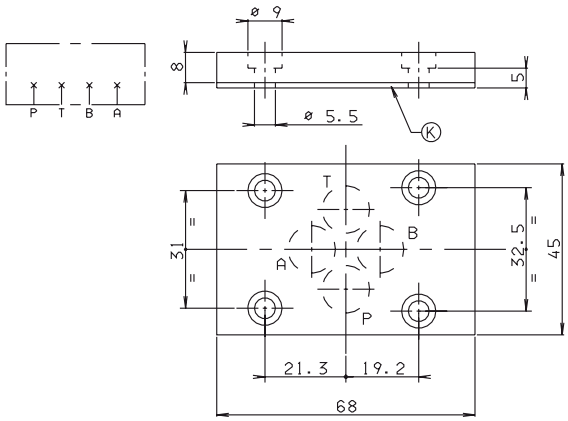

CETOP 5 reference: PF51

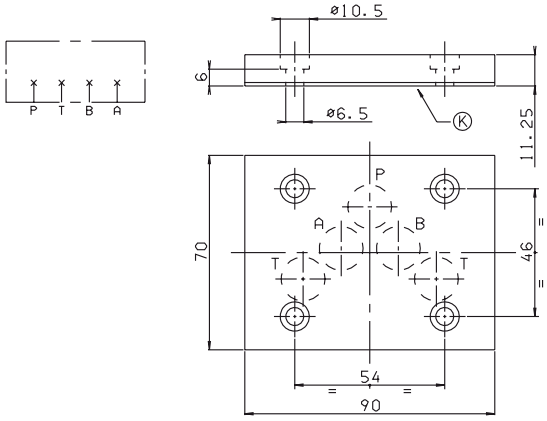

- Cover plates P towards T, A and B closed

Reference: PFBDR2P

CETOP 3 MODULAR FLOW REGULATION VALVES

Specifications

- Max flow rate: 50 l/min.
- Max. working pressure: 310 bar.
- Pilot ratio: 4.2:1.
- Adjustable from 60 to 210 bar.

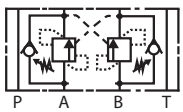

Reference: VEDM03A

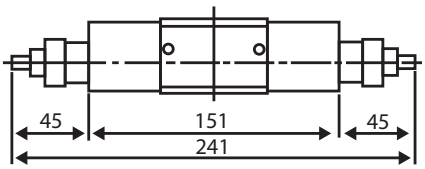

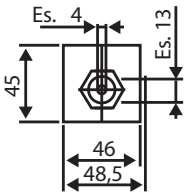

ELECTRICALLY CONTROLLED HYDRAULIC SPOOL VALVE KITS

Enables in-cab control of several functions installed on equipment attached to the tractor.

Including

- P1 base + electrohydraulic valve.
- 1 control box with a 5 m loom for 2 to 5 functions, 8 m for 6 to10 functions.

Options

- Ergonomic handle with loom (page 192).
- Ergonomic handle with arm rest.
- Pilot-operated check valve, flangeable (load-holding on cylinder): reference CPM03ABK for 40 l/min version and CPM05ABK for 70 l/min version (page 142).

Number of functions	Voltage: 12 V		Control box item
	Reference for flow rate Max. 40 l/min	Reference for flow rate Max. 70 l/min max	
2	DH240COFH	DH280COFH	1
3	DH340COFH	DH380COFH	1
4	DH440COFH	DH480COFH	1
5	DH540COFH	DH580COFH	1
6	DH640COFH	DH680COFH	2
7	DH740COFH	-	2
8	DH840COFH	-	2
9	DH940COFH	-	2
10	DH1040COFH	-	2

Free study DEFINITION QUOTATION DELIVERY

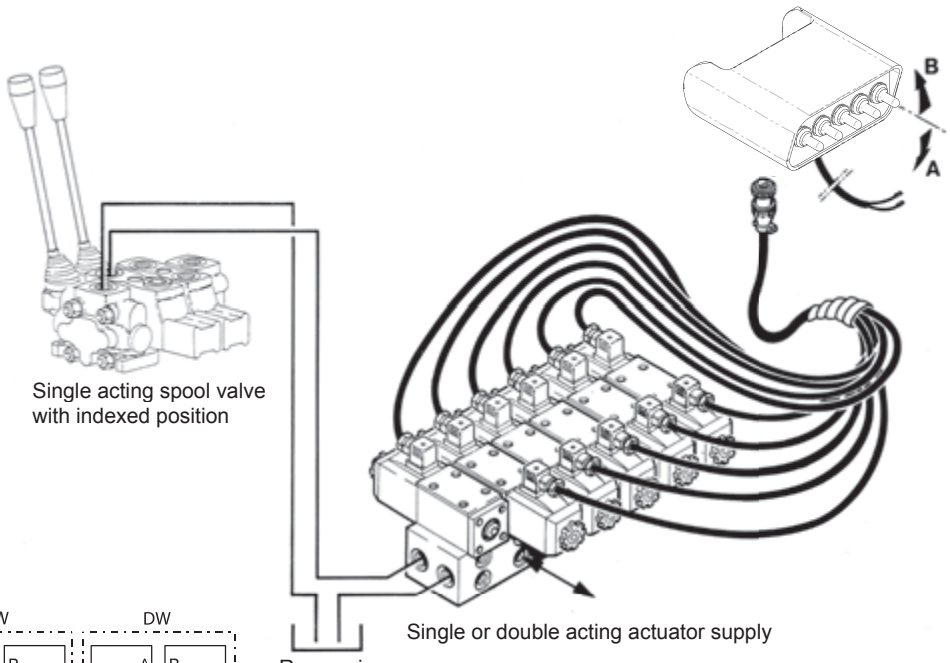

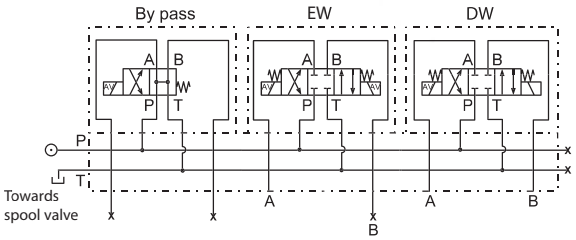

COMPACT STACKABLE SPOOL VALVES

Installation in areas of reduced space. Vehicles, equipment and power packs.
Control of single-acting cylinder, double-acting cylinder and hydraulic motor.

- Compact spool valve (min. height of 96 mm).
- Practical: priority flow rate with electric or manual control.
- Modular: functions can be added (max. 8 sections).
- No by-pass required for series installation.
- Excellent value for money.

Technical specifications

- Hydraulic

	Section		Entry plate with		
	Parallel	Series	Pressure relief valve	Bypass	Divider
Flow rate (l/min)	40	30	On P: 40	On P: 40	**On P: 40 Controlled: 0 - 25 Residual: 50**
Maximum pressure P, A, B (bar)	350	210	350	350	**210**
Maximum pressure T (bar)	210				
Temperature (°C)	- 20 to +70				
Viscosity (mm²/s)	15 to 380				
Weight (kg)	4/2 spool valve: 1.85 4/3 spool valve: 2.4		1.25	1.35	**Manual 2.2 Elect.: 4.5**
Filtration (NAS1638)	8				

Options straight fittings and elbow fittings See page 128

- Electrical

Continuous voltage (V)	**12, 24**
Power (W)	**29 in 24 V / 36 in 12 V**
Frequency (1/h)	**15000**
Ambient air temperature (°C)	**Up to + 50**
Coil temperature (°C)	**Up to + 180**
Duty cycle	**1**

- Mountings

Input	P, T	**BSP 1/2"**
	MP	**BSP 1/4"**
Section	A, B	**BSP 3/8"**
Output	T	**BSP 1/2"**

Electric box See page 191

Installation examples

Kit without pressure relief valve on entry plate and bypass on section - parallel installation (12 volts)

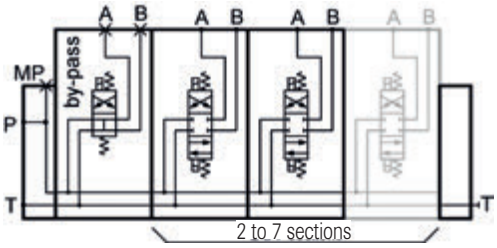

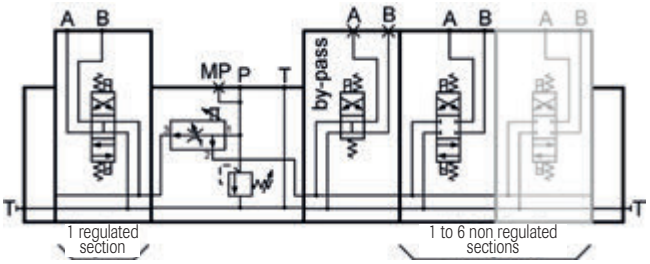

Kit with pressure relief valve and manual flow divider on entry plate - parallel installation (12 volts)

Options PVG connection plate See page 25

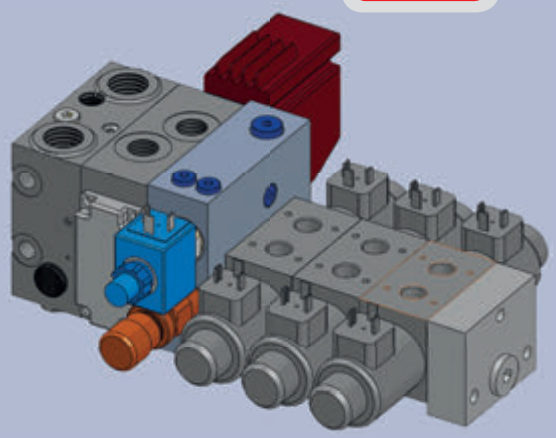

Headquarters: +33 (0)2 51 34 10 10 / UK: +44 (0)1728 684 800

General dimensions

Entry plate

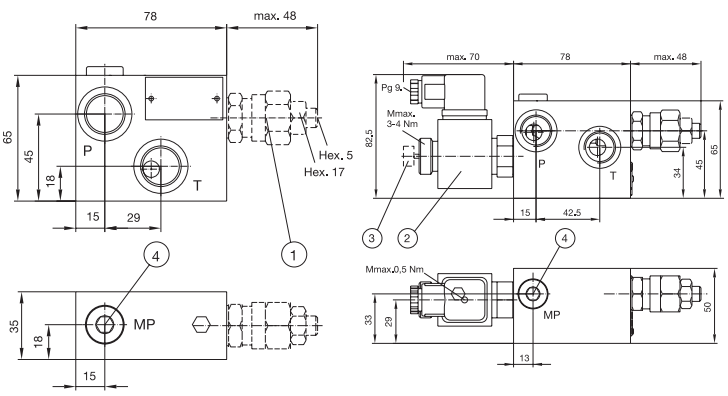

1. Relief valve
2. By pass
3. By pass emergency control
4. Pressure tapping 1/4BSP

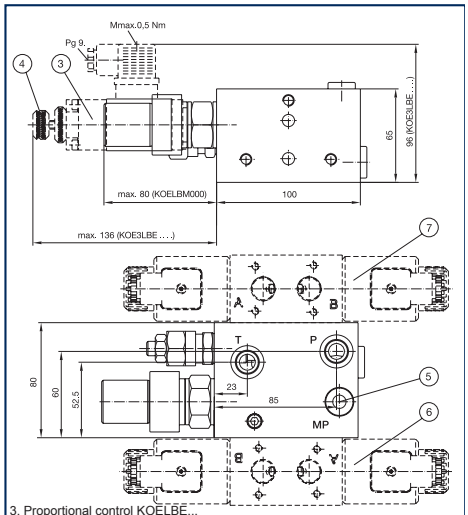

3. Proportional control KOELBE...
4. Emergency control for KOELBE...
5. Pressure tapping 1/4 BSP
6. Valve flow
7. Valve flow by pass

Section

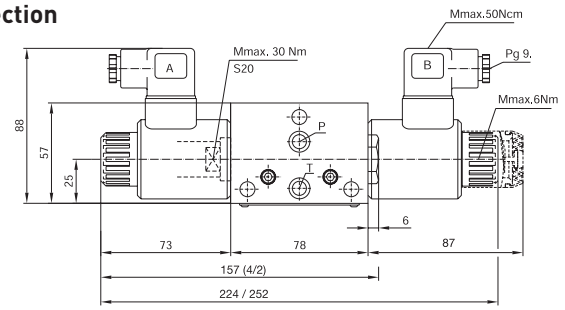

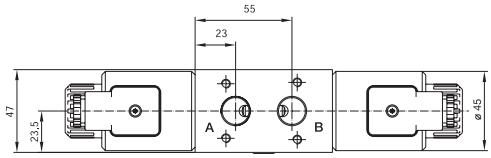

Closing plate

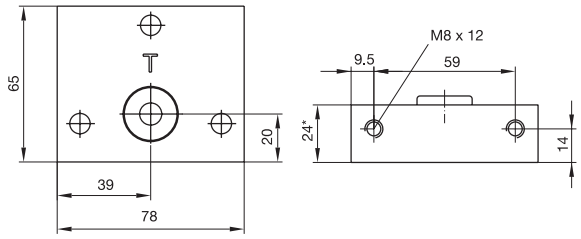

Mountings

Input	P, T	**BSP 1/2"**
	MP	**BSP 1/4"**
Section	A, B	**BSP 3/8"**
Output	T	**BSP 1/2"**

Assembly dimensions

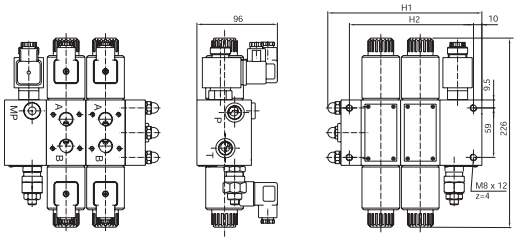

Entry plate with flow regulation

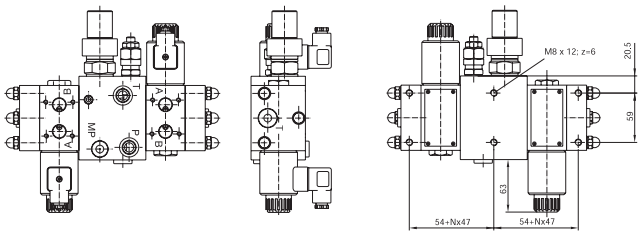

Entry plate	H1	H2
With or without pressure relief valve	75 + N x 47 (N = 1 to 8)	**39 + N x 47 (N = 1 to 8)**
with pressure relief valve and bypass	90 + N x 47 (N = 1 to 8)	**54 + N x 47 (N - 1 to 8)**

PVG32 DISTRIBUTION SYSTEM

In it's simplest form, it enables control of the receivers supply flow proportionally with manual operation. For more demanding applications, it can be supplemented with various hydraulic and electric functions on request. The number of possible variants is practically unlimited, and maintains its compact size.

- Flow rate control, regardless of load variations:
  > Flow rate to each receiver regardless of its pressure
  > Flow rate to each receiver regardless of the pressure from the others.
- Excellent regulating features.
- Energy efficient.
- Up to ten distribution modules per spool valve assembly.
- Several types of hydraulic connections.
- Low weight.

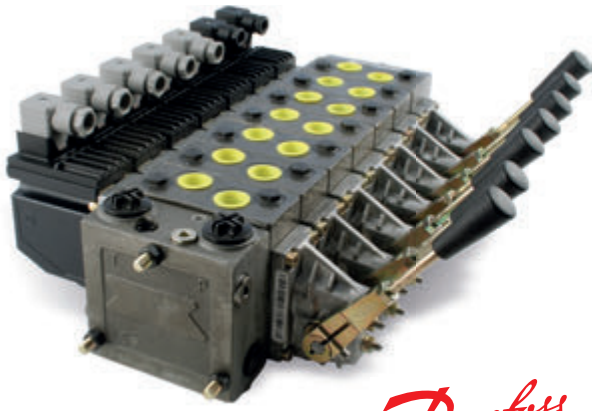

Applications

- The PVG 32 load sensing spool valve is designed to meet the requirements of many applications.

Technical specifications

Max. pressure	Opening P	Continuous	**350 bar** [1]
	Openings A, B		**350 bar**
	Opening T	Static/dynamic	**25/40 bar**
Nominal flow rate	Opening P		**140/230 l/min** [3] [4]
	Openings A, B	With pressure balance	**100 l/min** [2]
	Openings A, B	Without pressure balance	**125 l/min**
Standard stroke of the spool valve			**± 7 mm**
Stroke of the spool valve, float position	Proportional range		**± 4.8 mm**
	Float position		**8 mm**
Dead zone, control spool valves	Standard		**± 1.5 mm**
	Linear character		**± 0.8 mm**
Max. internal leakage, at 100 bar and 21 mm²/s	A/B → T, without shockproof valve		**20 cm³/min**
	A/B → T, with shockproof valve		**25 cm³/min**
Temperature (inlet)	Recommended temperature		**30 → 60°C**
	Minimum temperature		**-30°C**
	Maximum temperature		**+90°C**
Ambient air temperature			**30 → +60°C**
Oil viscosity	Operating range		**12-75 mm²/s**
	Minimum viscosity		**4 mm²/s**
	Maximum viscosity		**460 mm²/s**
Filtration	Max. pollution (ISO 4406)		**18/16/13**
Oil consumption of the pilot-operated pressure reducer			**1 l/min**

[1] With PVSI cover plate. With PVS cover plate, max. 300 bar.
[2] For 130 l/min, contact us.
[3] In open circuit, if the P hoses/pipes are short and if the flow rate exceeds 100 l/min, there is a strong possibility of pressure peaks.
[4] For systems with PVPVM intermediate entry plate.

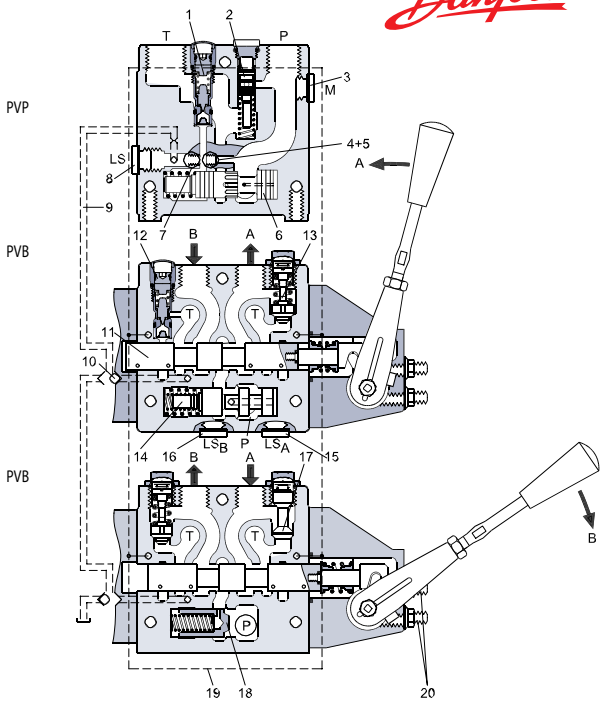

1. Pressure relief valve
2. Pressure reduction valve for pilot oil supply
3. Pressure gauge connection
4. Plug, open center
5. Orifice, closed center
6. Pressure adjustment spool
7. Plug, closed center
8. LS connection
9. LS signal
10. Shuttle valve
11. Main spool
12. LS pressure limiting valve
13. Shock and suction valve, PVLP
14. Pressure compensator
15. LS connection, port A
16. LS connection, port B
17. Suction valve, PVLA
18. Load drop check valve
19. Pilot oil supply for PVE
20. Max. oil flow adjustment screws for A/B ports

MOUNTINGS FOR PVG

- Fitting for PVG, 1 to 3 sections
- Installation in all directions, with or without LSA, LSB (access to LSA and LSB).
- Surplus can be cut (for one or two sections).

Reference: 71012633

PVG32 DISTRIBUTION SYSTEM (CONT.)

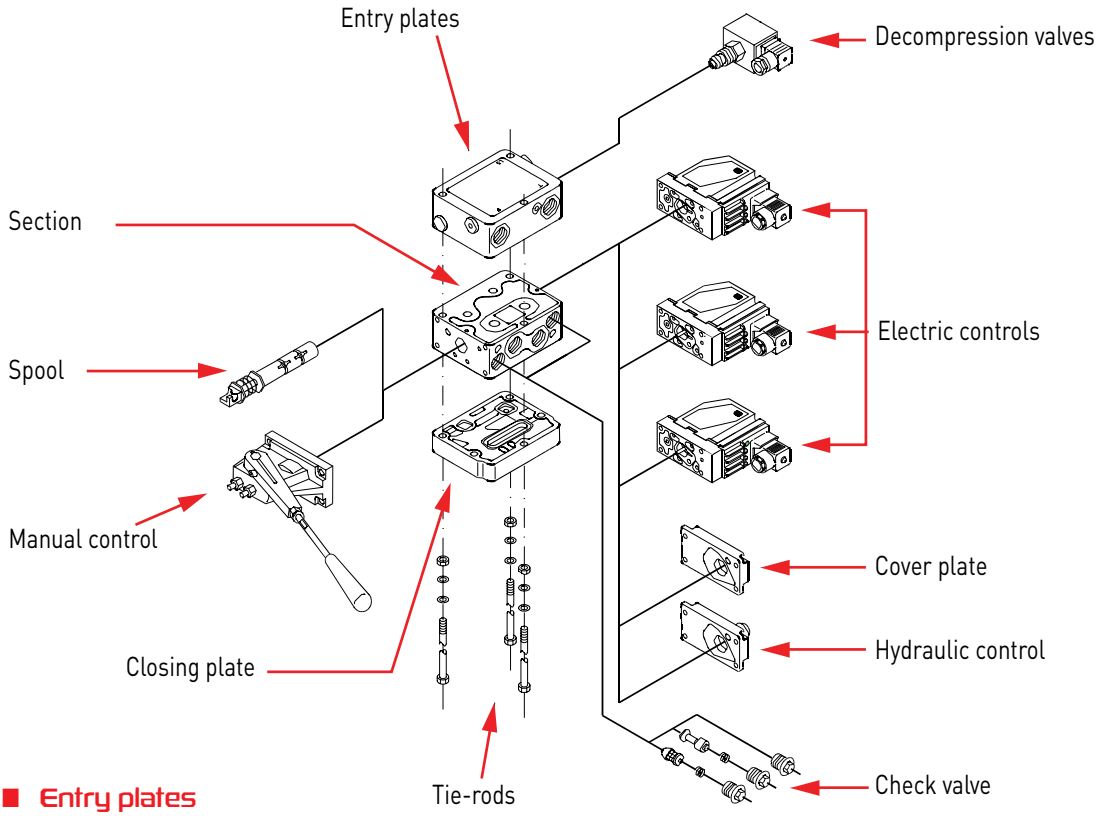

Entry plates

Code no. 157BXXXX*		Without pressure reduction when used with just manual control		With pressure reduction when used with electric or hydraulic control		
*Replace the X with the appropriate code		Standard	Prepared for decompression solenoid valve	Standard	Prepared for decompression solenoid valve	With pilot pressure tap
Open centre	T: 3/4", P: 1/2"	5000		5010	5012	
	T: 3/4", P: 3/4"	5100	5102	5110	5112	5190
Closed centre	T: 3/4", P: 1/2"	5001		5011	5013	
	T: 3/4", P: 3/4"	5101	5103	5111	5113	5191

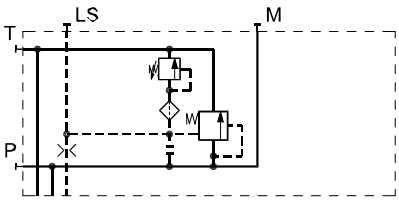

Diagram
157B5000
157B5100

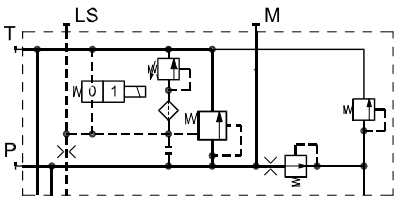

Diagram
157B5012
157B5112

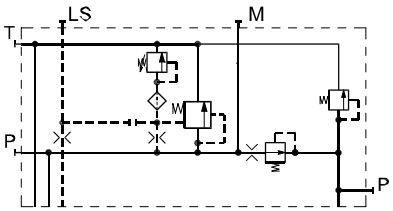

Diagram
157B5191

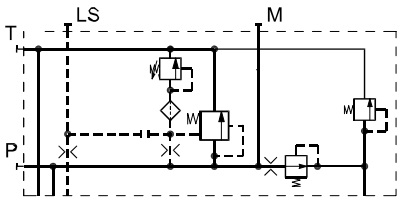

Diagram
157B5011
157B5111

Decompression solenoid valves

Symbol	Description		Code no.
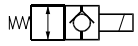	PVPX, normally open: LS pressure decompressed without set point toward PVPX	12 V	157B4236
		24 V	157B4238
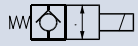	PVPX, normally closed: LS pressure decompressed with set point toward PVPX	12 V	157B4246
		24 V	157B4248
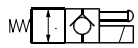	PVPX, normally open with manual emergency operation: LS pressure decompressed without set point toward PVPX. Manual DA emergency operation - select LS pump	12 V	157B4456
		24 V	157B4458
		26 V	157B4260

PVG32 DISTRIBUTION SYSTEM (CONT.)

Section

Code 157BXXXX* *Replace the X with the appropriate code	Section not prepared for shockproof valves	Section prepared for shockproof valves
With neither pressure compensator nor check valve	6000	6030
With check valve	6100	6130
With pressure compensator	6200	6230
With pressure compensator and pressure relief valve, LSA/LSB	6203	6233

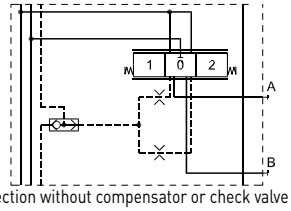

Section without compensator or check valve

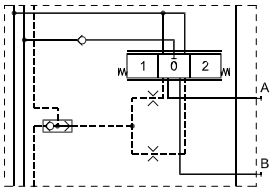

Section with check valve

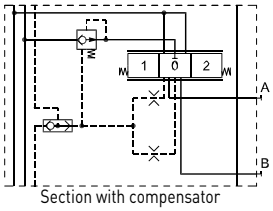

Section with compensator

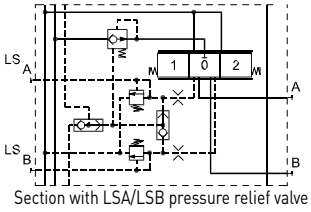

Section with LSA/LSB pressure relief valve

Valves

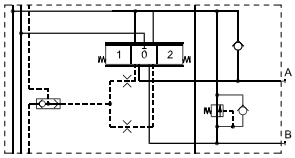

Anti-cavitation valve: Reference 157B2001

Shockproof valves and anti-cavitation valves

Code 157BXXXX* *Replace the X with the appropriate code		2032	2050	2063	2080	2100	2125	2140	2150	2160	2175	2190	2210	2230	2240	2250	2265	2280	2300	2320	2350
Adjustment	bar	32	50	63	80	100	125	140	150	160	175	190	210	230	240	250	265	280	300	320	**350**

Spool valves

Code 157BXXXX* *Replace the X with the appropriate code		Spool valves for section without LSA/LSB limiter							Spool valves for section with LSA/LSB limiter						
Flow rate (l/min)		5	10	25	40	65	100	130	5	10	25	40	65	100	130
Double-acting spool valve A and B closed	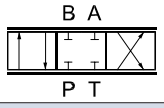	7005	7000	7001	7002	7003	7004	7006	7025	7020	7021	7022	7023	7024	7026
Double-acting spool valve A and B toward T	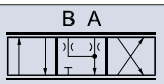	7105	7100	7101	7102	7103	7104	7106	-	-	7121	7122	7123	7124	7126
Spool valve, single-acting on A	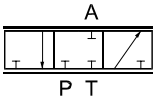	-	7200	7201	7202	7203	7204	-	-	-	-	-	-	-	-

Manual controls and covers

	Name	Reference
1	Manual replacement control	157B3171
2	Cover of the universal control	157B0001
3	Kit of seals for manual control or associated cover	157B3999
	Cover that indexes all positions	157B0004 + 155L9150

Hydraulic controls

- Regulation range: 5 - 15 bar.
- Max. pilot pressure: 30 bar.

Symbol	Name	Reference
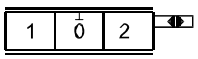	PVH, cover for hydraulic remote control	157B0008

1


2


3


PVG32 DISTRIBUTION SYSTEM (CONT.)

Electric controls

There are 5 types of electrical actuation.

- PVEO: on off actuation.
- PVEM: medium proportional actuation.
- PVEA: low hysteresis proportional actuation.
- PVEH: high-performance proportional actuation.
- PVES: superior performance proportional actuation.

		PVEO and PVEM		PVEH, PVES		PVEA	
Supply voltage U_{DC}	Nominal	12 VDC	24 VDC	11 V - 32 V		11 V - 32 V	
	Range	11 V - 15 V	22 V - 30 V	11 V - 32 V		11 V - 32 V	
	Max. ripple.	5%		5%		5%	
Current draw at nominal voltage		0.65 A @ 12 V	0.33 A @ 24 V	0.57 A @ 12 V	0.3 A @ 24 V	0.33 A @ 12 V	**0.17 A @ 24 V**
Voltage set point	Neutral	0.5 x U_{DC}		0.5 x U_{DC}		0.5 x U_{DC}	
	A → B	0.25 . U_{DC} @ 0.75 . U_{DC}		0.25 . U_{DC} @ 0.75 . U_{DC}		0.25 . U_{DC} @ 0.75 . U_{DC}	
Current set point at nominal voltage (PVEM)		0.25 mA	0.50 mA	0.25 mA - 0.70 mA		0.25 mA - 0.70 mA	
Input impedance compared at 0.5 . U_{DC}		12 kΩ		12 kΩ		12 kΩ	
Input capacitor		-		100 →F			
Power consumption		8 W		7 W		3.5 W	

PVEO

PVEO on/off control Code 157BXXXXX*		HIRSCHMANN connector		AMP connector	
*Replace the X with the appropriate code		12 V	24 V	12 V	24 V
PVEO	ON / OFF	4216	4228	4901	4902
	ON / OFF with ramp	4217	4229	4903	4904
	ON / OFF anodised	4266	4268	Not available	

PVEM

PVEM, proportional control Code 157BXXXX*		Hirschmann CONNECTOR	
*Replace the X with the appropriate code		12 V	24 V
PVEM	Standard	4116	4128
	Floating	4416	4428

PVEA, PVEH, PVES

PVEA/PVEH/PVES, proportional control Code 157BXXXX*		HIRSCHMANN connector	AMP connector
*Replace the X with the appropriate code		11 - 32 V	11 - 32 V
PVEA	Standard, active default detection monitoring	Not available	4734
	Standard, passive default detection monitoring	Not available	4735
	Standard, active anodised	Not available	4775
PVEA-DI	Standard, active default detection monitoring	Not available	4736
	Standard, passive default detection monitoring	Not available	4737
PVEH	Standard, active default detection monitoring	4032	4034
	Standard, passive default detection monitoring	4033	4035
	Standard, passive anodised	Not available	4073
	Floating, active default detection monitoring	4332	Not available
PVEH-DI	Standard, active default detection monitoring	Not available	4036
	Standard, passive default detection monitoring	Not available	4037
PVES	0% hysteresis, active default detection monitoring	4832	4834
	0% hysteresis, passive default detection monitoring	4833	4835

A default detection circuit is included in the all the PVEA, PVEH and PVES modules. The circuit is available in two versions:

- Active default detection provides an error signal, disables the solenoid valves and places the spool valve in a neutral position.
- Passive default detection monitoring does not provide an error signal.

End plates

Name	Reference
End plate, standard, max. 300 bar pressure	157B2000
End plate, steel, max. 350 bar pressure	157B2014
End plate, steel, max. 350 bar pressure with LX connection	157B2015

Seals for sections and assembly kit

Kit of seals (inter-slice) and tie rods	
Number of sections	Reference
1	157B8001
2	157B8002
3	157B8003
4	157B8004
5	157B8005
6	157B8006
7	157B8007
8	157B8008
9	157B8009
10	157B8010

SHUTTLE VALVES

They enable transmission of two load sensing signals to a single pump or provide dual pilot operation.

Mounting	G	L	D	AD	ID	S1	S2	Reference	Item
3x 1/4"	1/4	-	-	-	-	-	-	**SCN014HT**	1
DIN 8S	M16x1.5	64	48	8	5	17	19	**SCN08S**	2
DIN 10S	M18x1.5	68	50	10	7	19	22	**SCN10S**	2
DIN 12S	M20x1.5	76	58	12	8	22	24	**SCN12S**	2


1

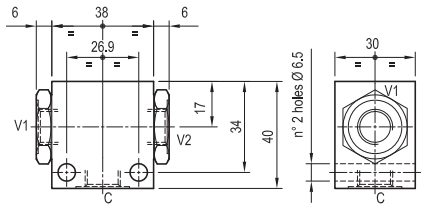

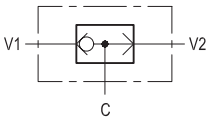

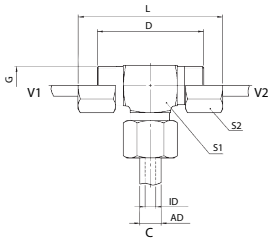


2

IN-LINE CHECK VALVES

Load pressure generation.
Free wheeling on a circuit (example motor).

Maximum flow rate (l/min)	Mounting A, B	Shaft diameter (C)	Length (D)	Max. pressure (bar)	Valve calibration (bar)*	Reference
15	1/4"	19	55	350	1	**RS06**
30	3/8"	24	67	315	1	**RS10**
60	1/2"	27	72	315	1	**RS13**
90	3/4"	35	85	280	1	**RS19**
120	1"	46	105	240	1	**RS25**

* Contact us for other calibrations

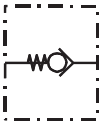

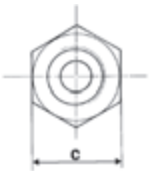

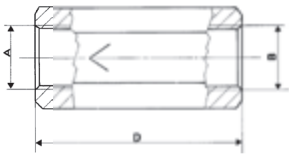

PARACHUTE VALVES

Specifications

- Maximum pressure: 350 bar.
- Flow rate: 25 to 140 l/min.
- Adjustment via Nylstop nut.
- Ambient air temperature: -30 to +50°C, Oil temperature: -30 to +80°C.
- Filtration 30 µm.

When installed next to a cylinder, this valve blocks the cylinder's movement if it senses a sudden increase in flow caused, for example, by a pipe bursting upstream of the valve.

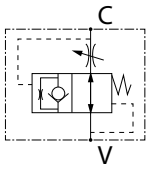

A	B	C	Ch	Mountings (BSP)	Weight (kg)	Reference
50	12	23	19	1/4"	0.07	**CBM014OM**
58	12	27	22	3/8"	0.095	**CBM038**
66	17	33	27	1/2"	0.145	**CBM012**
78	19	36	32	3/4"	0.22	**CBM034**

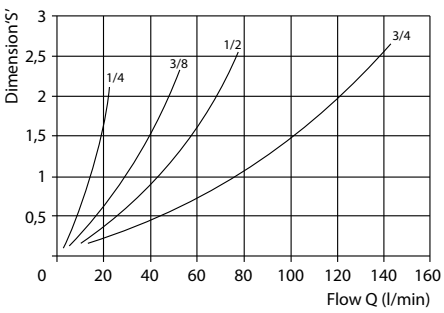

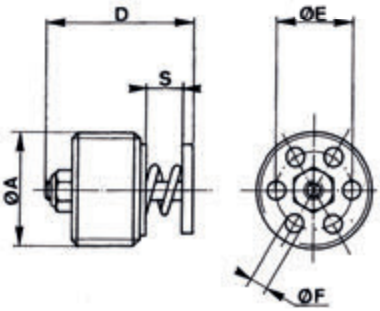

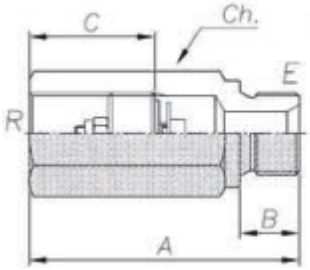

SINGLE AND DOUBLE PILOT-OPERATED CHECK VALVES

Specifications

- In-line mounting, internal piloting.

These valves block single- or double-acting cylinders.

Single pilot-operated check valves

Mounting	L	M	N	O	P	R	S	T	U	Z	Pilot ratio	Ref.
1/4"	60	40	30	27	23	16	28	12	13	6.5	4:1	**CASP014**
3/8"	70	50	35	29	23	16	35	15	15	6.5	4:1	**CASP038**
1/2"	80	50	35	32	26	21	34	16	15	6.5	4:1	**CASP012**
3/4"	100	60	40	41	33	24	39	21	15	6.5	3.5:1	**CASP034**

Double pilot-operated check valves

Mounting	L	M	N	O	P	R	S	T	U	Z	Pilot ratio	Ref.
1/4"	60	40	30	27	27	16	28	12	13	6.5	4:1	**CADP014**
3/8"	70	50	35	29	29	16	35	15	15	6.5	4:1	**CADP038**
1/2"	80	50	35	32	32	21	34	16	15	6.5	4:1	**CADP012**
3/4"	100	60	40	41	41	24	39	21	15	6.5	3.5:1	**CADP034**

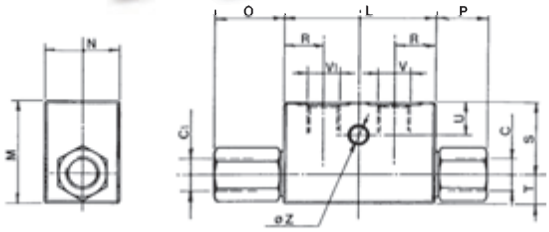

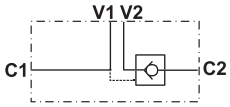

CASP

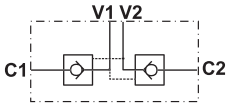

CADP

C1 - C2 = Cylinder

V1 - V2 = Spool valve

ADJUSTABLE SHUT-OFF VALVES

Blocks a cylinder if it senses a sudden increase in flow caused, for example, by a pipe bursting upstream of the valve.

External adjustment

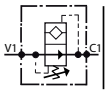

- Extensive adjustment range.

Adjustment

- Fully tighten the adjusting screw (clockwise direction), then loosen it by the number or fraction of turns corresponding to the required activation flow rate.
- In practice, check that the screw does not cause an unintentional blockage when under full load. If this occurs, turn the receptor in the opposite direction to release the valve and enable it to open again, then loosen the screw 1/8th of a turn to release the unintended blockage.

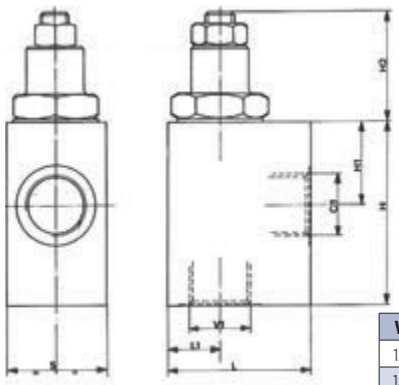

V1-C1	L	L1	H	H1	H2	S	Reference
1/4"BSP	40	15	50	20	38	35	**VB014**
1/2"BSP	50	18	65	29	35	35	**VB012**
3/4"BSP	60	24	70	29	35	55	**VB034**

IN-LINE PO CHECK VALVES

Specifications

- In-line mounting, external piloting.
- Can be unblocked by the spool valve's double-acting control.

Flow rate (l/min)	Working pressure (bar)	Opening pressure (bar)	Pilot ratio	Oil temperature (°C)	Viscosity (mm²/s)	Mountings		Reference
						A, B	Z	
35	350	0.5	1:4	-20°C to +70°C	15 to 380	3/8"BSP	1/4"BSP	**CASP038LHKO**

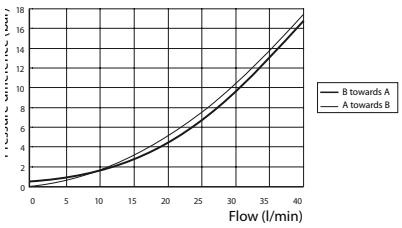

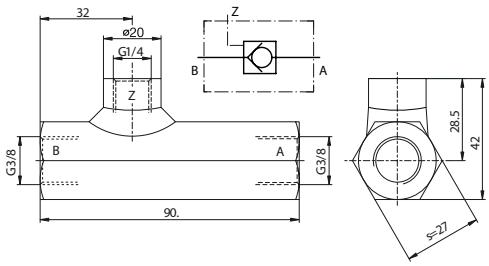

CHECK VALVES, FLANGE-MOUNTABLE ON CYLINDER

These valves block single- and double-acting cylinders with internal piloting.

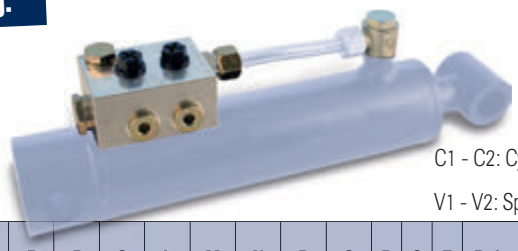

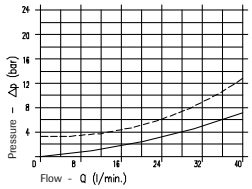

Composition

- Single or double valve.
- 2 complete banjo bolts (without tube).
- Optional rigid connection kit.

C1 - C2: Cylinder

V1 - V2: Spool valve

Type of valve	Cylinder installation	Max. pressure (bar)	Pilot ratio	Maximum flow rate (l/min)	Banjo/ bolt bore Ø	E	F	G	L	M	N	P	Q	R	S	T	Reference	Rigid connection kit
Single	3/8"	250	3/1	40	8	23.5	30.5	21.5	13	22	74.5	90	65	30	45	9	**CAS038FL3**	**71080090**
Double	3/8"	400	3/1	40	8	-	-	-	29.5	17.5	13	70	22	30	45	9	**CAD038FL3**	**71080090**
Single	1/2"	250	3/1	40	10	28.5	33	26	16	27	79.5	95	75	35	50	10	**CAS012FL3**	**71080092**
Double	1/2"	400	3/1	40	10	-	-	-	34	30	16	80	27	35	50	10	**CAD012FL3**	**71080092**

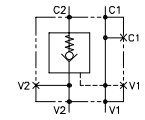

Single-acting valves

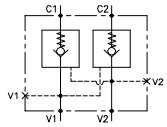

Double-acting valves

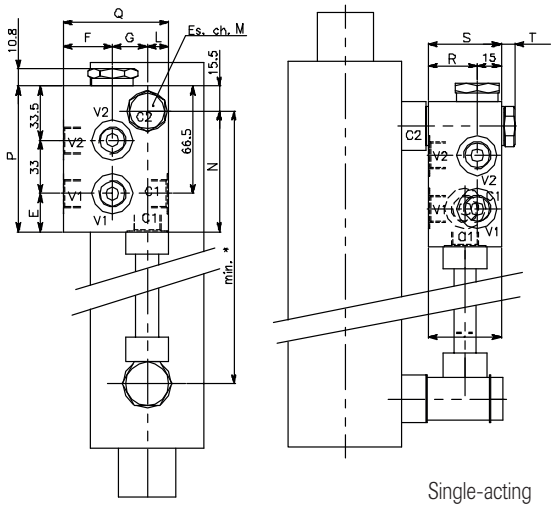

Single-acting valves

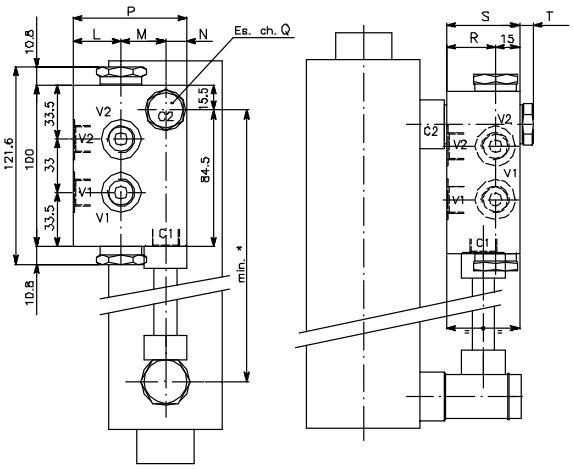

Double-acting valves

DOUBLE-ACTING CHECK VALVE WITH RIGID PIPE

Mounting the valve on a double-acting cylinder.

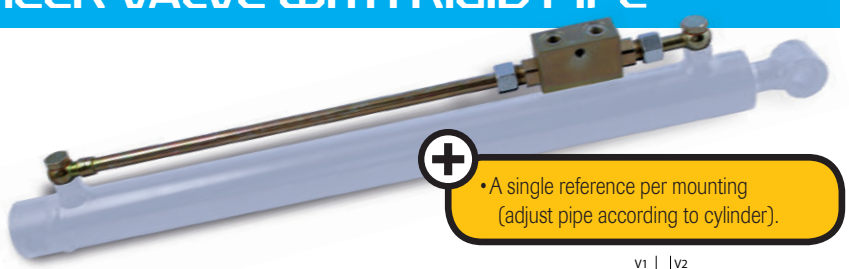

- A single reference per mounting (adjust pipe according to cylinder).

Composition

- A single reference = valve + union + tube.

Pilot ratio	Maximum flow rate (l/min)	Max. pressure (bar)	Opening pressure (bar)	V1 V2	C1 C2	L (mm)	L1 (mm)	L2 (mm)	L3 (mm)	L4 (mm)	H (mm)	S (mm)	Weight (kg)	Reference
1/5.5	20	350	4	1/4"BSP	12L	64	134	36	160	84	40	30	0.648	**CD014VDOC0498**
1/5.5	30	350	4	3/8"BSP	12L	64	134	36	166	84	40	30	0.630	**CD038VDOC0446**
1/5	50	350	3	1/2"BSP	15L	90	164	45	196	106	45	35	1.098	**CD012VDOC0498**

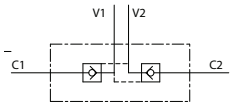

Safety valve kit Contact us

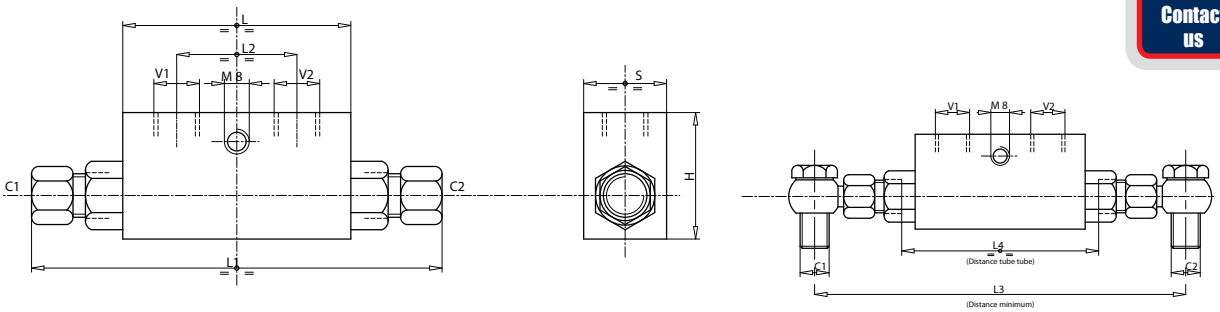

OVERCENTRE VALVES

Specifications

- Zinc-plated bi-chromate steel body.
- Factory setting: 320 bar
- Adjust the valve to at least 1.3 times the load pressure to enable a quick closure.

These valves are used to control and block the cylinders movements to enable the following functions.
- controlled lowering of the load: prevents the load from becoming the driving element, and the overcentre valve prevents the cylinder from cavitating.
- Limit the pressure within the cylinder in the event of shocks created by an overload or pressure peaks created by the pump (requires the utilisation of open centre spool valve.)

Single-acting overcentre valves

Max. flow at input (l/min)	Max. pressure (bar)	Pilot ratio	Dimensions										Weight	Reference
			V1, V2, C1, C2	L	L1	L2	L3	L4	L5	L6	H	S		
				mm	mm	mm	mm	mm	mm	mm	mm	mm	kg	
20	350	1:4.5	1/4"BSP	100	149	30	60	20	50	55	60	30	1.310	**VS014TDNX1**
40	350	1:4.5	3/8"BSP	100	149	30	60	20	50	55	60	30	1.256	**VS038TDNX1**
60	350	1:4.5	1/2"BSP	100	149	36	65	20	50	57.5	60	30	1.196	**VS012TDNX1**
95	350	1:5.5	3/4"BSP	127	192	46	85	23.5	62.5	75	80	35	2.372	**VS034TDNX1**

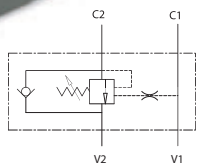

C1 - C2: Cylinder
V1 - V2: Spool valve

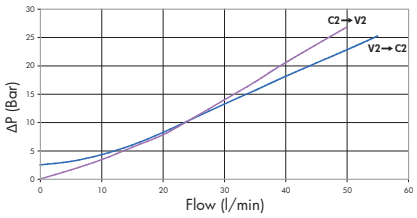

VS014TDNX1,
VS038TDNX1,
VS012TDNX1

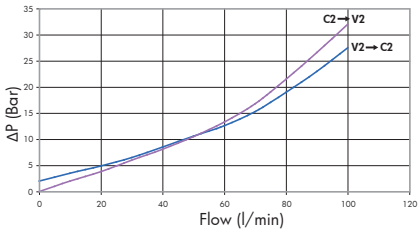

VS034TDNX1

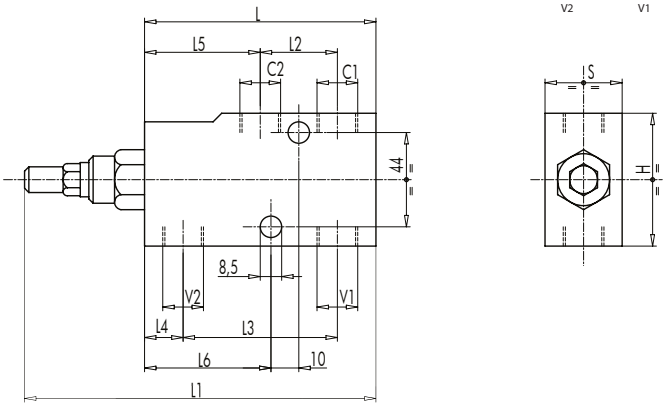

Double-acting overcentre valves

Max. flow at input (l/min)	Max. pressure (bar)	Pilot ratio	Dimensions												Weight	Reference
			V1, V2, C1, C2	L	L1	L2	L3	L4	L5	L6	H1	H2	H	S		
				mm	mm	mm	mm	mm	mm	mm	mm	mm	mm	mm	kg	
20	350	1:4.5	1/4"BSP	150	248	50	110	30	50	44	32	28	60	30	1.968	**VD014TDNX1**
40	350	1:4.5	3/8"BSP	150	248	50	110	30	50	44	32	28	60	30	1.944	**VD038TDNX1**
60	350	1:4.5	1/2"BSP	150	248	50	110	30	50	44	32	28	60	30	1.886	**VD012TDNX1**
95	350	1:5.5	3/4"BSP	190	320	65	143	44	62.5	64	40	40	80	35	3.820	**VD034TDNX1**

C1 - C2: Cylinder

V1 - V2: Spool valve

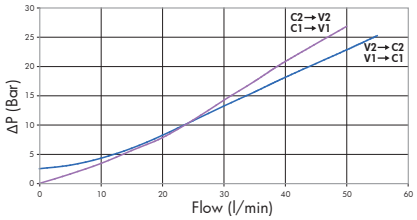

VD014TDNX1,
VD038TDNX1,
VD012TDNX1

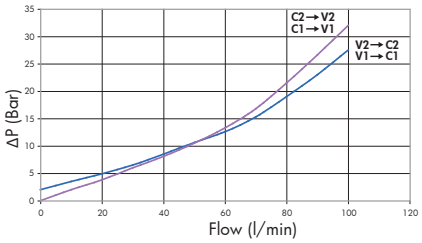

VD034TDNX1

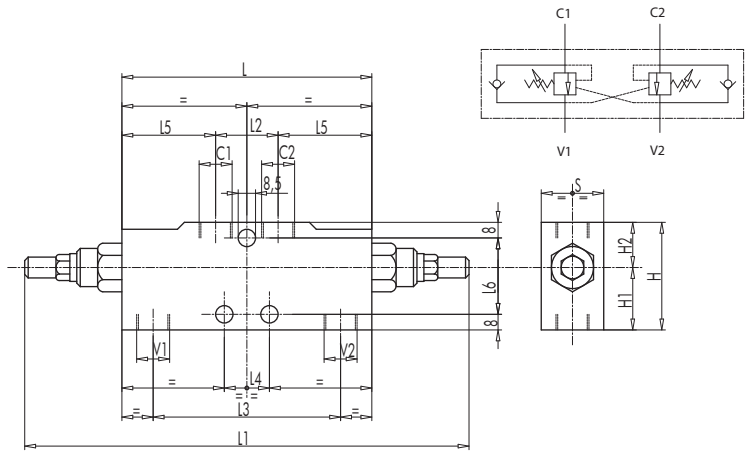

OVERCENTRE VALVES (CONT.)

Flange-mounted single-acting overcentre valves

Max. flow at input (l/min)	Max. pressure (bar)	Pilot ratio	Dimensions												Weight	Min. distance	Max. distance	Valve ref. + banjo bolt	Valve ref. + Rigid connection
			V1, V2, C1, C2	L	L1	L2	L3	L4	L5	L6	H1	H2	H	S					
				mm	mm	mm	mm	mm	mm	mm	mm	mm	mm	mm	kg	mm	mm		
40	350	1:4.5	3/8"BSP	100	150	60	20	50	50	15	30	30	60	30	1.350	110	560	VS038VDNX1	VS038VDNXK
60	350	1:4.5	1/2"BSP	100	150	60	20	53	47	15	34	26	60	30	1.310	110	680	VS012VDNX1	VS012VDNXK

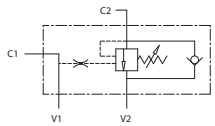

C1 - C2: Cylinder

V1 - V2: Spool valve

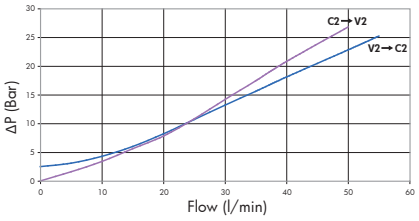

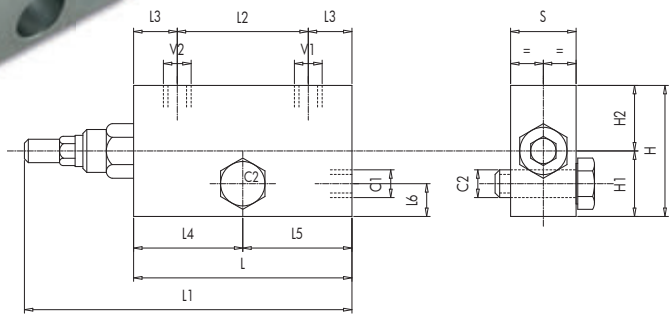

Flange-mounted double-acting overcentre valves

Max. flow at input (l/min)	Max. pressure (bar)	Pilot ratio	Dimensions												Weight	Min. distance	Max. distance	Valve ref. + banjo bolt	Valve ref. + Rigid connection
			V1, V2, C1, C2	L	L1	L2	L3	L4	L5	L6	H1	H2	H	S					
				mm	mm	mm	mm	mm	mm	mm	mm	mm	mm	mm	kg	mm	mm		
40	350	1:4.5	3/8"BSP	150	250	110	20	50	100	12.5	40	30	70	30	2.414	160	610	VD038VDNX1	VD038VDNXK
60	350	1:4.5	1/2"BSP	150	250	110	20	50	100	18	48	32	80	30	2.700	160	730	VD012VDNX1	VD012VDNXK

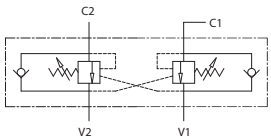

C1 - C2: Cylinder

V1 - V2: Spool valve

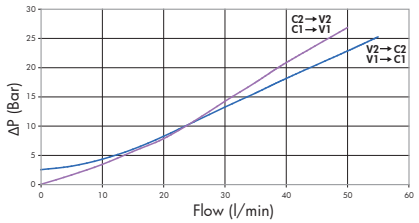

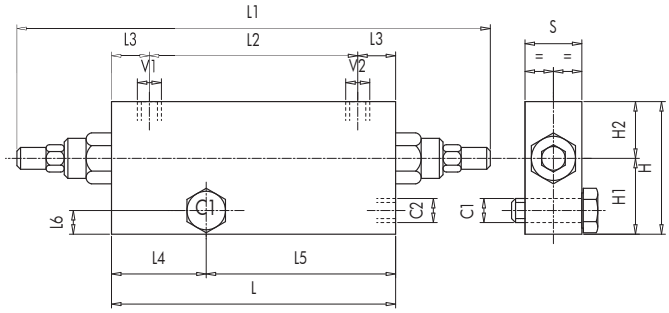

PILOT PRESSURE TO OPEN THE VALVE

$$\text{Pilot pressure} = \frac{\text{Valve calibration} - \text{Pressure caused by the load}}{\text{Pilot ratio}}$$

ANTI-CAVITATION BLOCKS FOR DANFOSS OMP/OMR MOTOR

Protects the motor from the effects of inertia when the motor is stopped.

Max. flow rate (l/min)	Max. pressure (bar)	Viscosity (cSt)	Mountings D1, D2	Reference
70	210	20/200	1/2"BSP	**BACOMP1**
70	210	10/200	1/2"BSP	**BACOMP2**
70	210	10/200	1/2"BSP	**BACOMS**

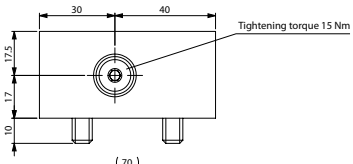

BACOMP

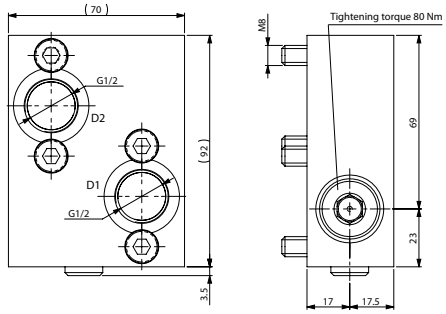

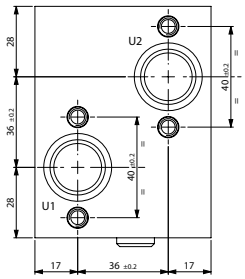

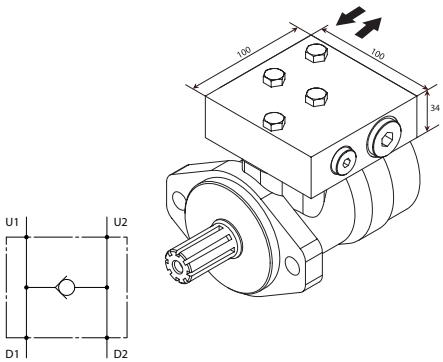

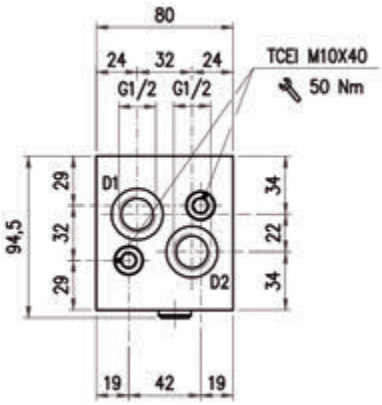

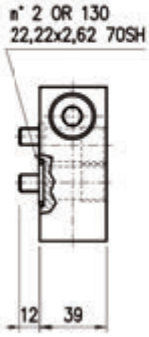

BACOMS

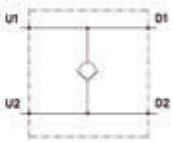

DOUBLE-ACTING OVERCENTRE VALVES FLANGE MOUNTED ON OMP/OMR MOTORS

Specifications

Flow rate (l/min)	Max. working pressure (bar)	Max. setting pressure (bar)	Pilot ratio	Oil temperature (°C)	Ambient air temperature (°C)	Recommended filtration	Tightening torque	Mountings V2, C2, V1, C1	Mountings C3	Reference
1-60	350	30-220	4.25:1	-30°C to +80°C	-30°C to +50°C	30 µm	70/80 N.m	1/2"BSP	1/4"BSP	**VER2F**

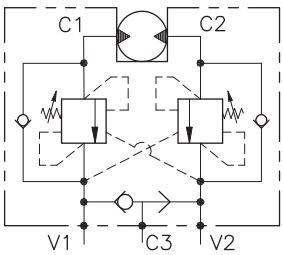

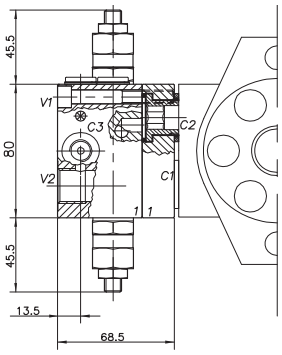

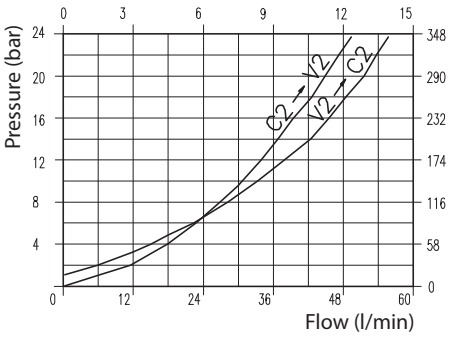

MINI CYLINDERS

Specifications

- Hardened chrome rod, zinc-plated bi-chromate body.
- Max. working pressure: 200 bar.
- Supply ports adjustable on rod side

Ø A	Ø B	Stroke	E	C	D	F	G	H	I	J	K	L	M	Volume (cm³)	Reference	Clevis reference	Ball joint reference
12	20	25	118	9	10	35	28	47	60	15	23.5	18	M10	12	**DE122025**	**CH10M10**	**RVF10**
		50	143	9	10	35	28	72	60	15	23.5	18	M10	20	**DE122050**		
		80	173	9	10	35	28	102	60	15	23.5	18	M10	29	**DE122080**		
16	25	50	146	11	12	40	35	69	65	18	25	22	M12	31	**DE162550**	**CHC12M12**	**RVFA12A**
		100	196	11	12	40	35	119	65	18	25	22	M12	56	**DE1625100**		
		150	246	11	12	40	35	169	65	18	25	22	M12	80	**DE1625150**		
		200	296	11	12	40	35	219	65	18	25	22	M12	105	**DE1625200**		

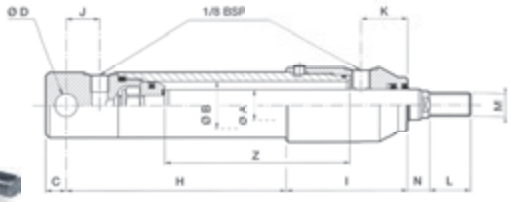

Clevis

Ball joint

SINGLE-ACTING STOCK CYLINDERS

Rod A Ø	Z stroke	C	D	E	G	H	J	O	P	Vol (l)	Weight (kg)	Rod guide (diagram)	Reference
25	100	14	14.2	190	42	24	40	-	-	0.08	1.5	Front	**V000250100F**
	200	14	14.2	290	42	24	40	-	-	0.15	2.3	Front	**V000250200F**
	300	14	14.2	390	42	24	40	-	-	0.25	3.0	Front	**V000250300F**
30	200	18	16.2	300	50	26	42	-	-	0.25	3.6	Front	**V000300200F**
	300	18	16.2	400	50	26	42	-	-	0.35	4.8	Front	**V000300300F**
	400	18	16.2	500	50	26	42	-	-	0.45	5.9	Front	**V000300400F**
	700	18	16.2	800	50	26	42	-	-	0.80	9.2	Front	**V000300700F**
40	200	22	23	330	60	32	47	-	-	0.40	5.9	Front	**V000400200F**
	300	22	23	430	60	32	47	-	-	0.60	7.7	Front	**V000400300F**
	400	22	23	530	60	32	47	-	-	0.80	9.3	Front	**V000400400F**
	700	22	23	830	60	32	47	-	-	1.40	14.2	Front	**V000400700F**
50	200	25	25.25	360	65	49	50	75	80	0.50	9.0	Rear	**V000500200F**
	300	25	25.25	460	65	49	50	75	80	0.70	11.2	Rear	**V000500300F**
	400	25	25.25	560	65	49	50	75	80	0.95	13.5	Rear	**V000500400F**
	550	25	25.25	710	65	49	50	75	80	1.30	16.9	Rear	**V000500550F**
	700	25	25.25	860	65	49	50	75	80	1.65	20.3	Rear	**V000500700F**
60	300	25	25.25	460	75	36	50	90	95	1.00	15.7	Rear	**V000600300F**
	400	25	25.25	560	75	36	50	90	95	1.35	18.6	Rear	**V000600400F**
	550	25	25.25	710	75	36	50	90	95	1.85	23.4	Rear	**V000600550F**
	700	25	25.25	860	75	36	50	90	95	2.35	28.0	Rear	**V000600700F**
70	300	30	30.25	509	85	66	55	100	95	1.35	22.5	Rear	**V000700300F**
	400	30	30.25	609	85	66	55	100	95	1.75	26.5	Rear	**V000700400F**
	500	30	30.25	709	85	66	55	100	95	2.15	30.5	Rear	**V000700500F**

Specifications

- Max. working pressure: 200 bar.
- Test pressure: 300 bar.
- Max. speed: 0.5 m/s.
- Temperature: -30°C to +90°C
- Hydraulic mineral oil.

- Front guide

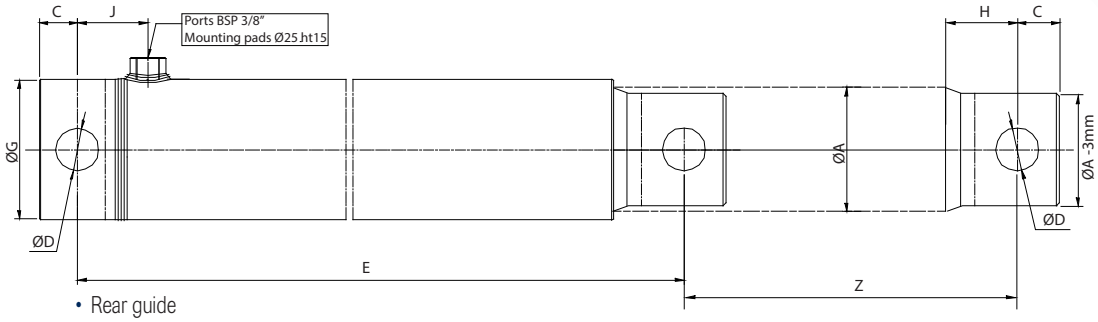

- Rear guide

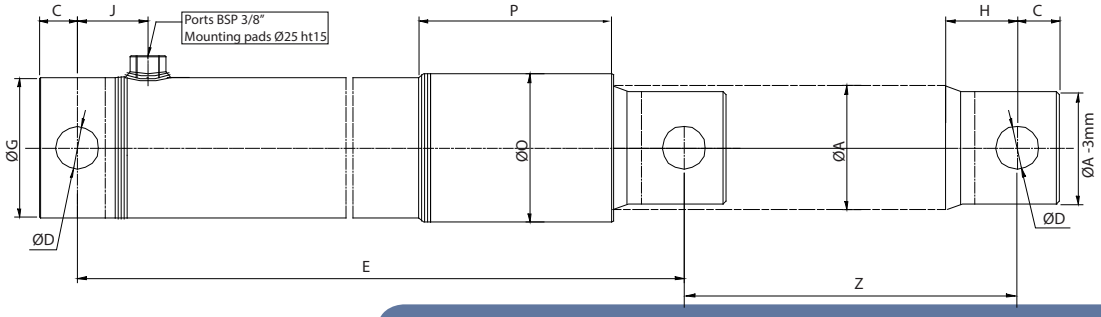

DOUBLE-ACTING STOCK CYLINDERS

Specifications

- Max. working pressure: 200 bar.
- Test pressure: 300 bar.
- Max. speed: 0.5 m/s.
- Temperature: -30°C to +90°C
- Hydraulic mineral oil.

Cylinders without fixings See page 160

Check valves See page 153

Rod A Ø	Piston B Ø	Stroke	R	D	Closed distance	U1	U	L	W	N1	E	J	H	Vol (l)	Weight (kg)	Reference
20	32	50	14	16.2	205	35	42	61	30	32	35	13	1/4	0.05	1.7	**V200320050F**
		100	14	16.2	255	35	42	61	30	32	35	13	1/4	0.1	2	**V200320100F**
		150	14	16.2	305	35	42	61	30	32	35	13	1/4	0.13	2.3	**V200320150F**
		200	14	16.2	355	35	42	61	30	32	35	13	1/4	0.17	2.6	**V200320200F**
		300	14	16.2	455	35	42	61	30	32	35	13	1/4	0.25	3.2	**V200320300F**
		400	14	16.2	555	35	42	61	30	32	35	13	1/4	0.32	3.6	**V200320400F**
		500	14	16.2	655	35	42	61	30	32	35	13	1/4	0.4	4.2	**V200320500F**
		600	14	16.2	755	35	42	61	30	32	35	13	1/4	0.48	4.8	**V200320600F**
		700	14	16.2	855	35	42	61	30	32	35	13	1/4	0.56	5.3	**V200320700F**
25	40	100	18	20.25	270	40	50	65	35	38	40	15	3/8	0.15	2.9	**V250400100F**
		200	18	20.25	370	40	50	65	35	38	40	15	3/8	0.25	3.8	**V250400200F**
		300	18	20.25	470	40	50	65	35	38	40	15	3/8	0.4	4.8	**V250400300F**
		400	18	20.25	570	40	50	65	35	38	40	15	3/8	0.5	5.7	**V250400400F**
		500	18	20.25	670	40	50	65	35	38	40	15	3/8	0.65	6.6	**V250400500F**
		600	18	20.25	770	40	50	65	35	38	40	15	3/8	0.75	7.6	**V250400600F**
		700	18	20.25	870	40	50	65	35	38	40	15	3/8	0.88	9	**V250400700F**
		800	18	20.25	970	40	50	65	35	38	40	15	3/8	1	9.5	**V250400800F**
		1000	18	20.25	1170	40	50	65	35	38	40	15	3/8	1.25	11	**V250401000F**
30	50	100	22	25.25	300	45	60	85	40	42	43	15	3/8	0.2	4.4	**V300500100F**
		150	22	25.25	350	45	60	85	40	42	43	15	3/8	0.3	4.7	**V300500150F**
		200	22	25.25	400	45	60	85	40	42	43	15	3/8	0.4	5.7	**V300500200F**
		300	22	25.25	500	45	60	85	40	42	43	15	3/8	0.6	6.9	**V300500300F**
		400	22	25.25	600	45	60	85	40	42	43	15	3/8	0.8	8.1	**V300500400F**
		500	22	25.25	700	45	60	85	40	42	43	15	3/8	1	9.3	**V300500500F**
		600	22	25.25	800	45	60	85	40	42	43	15	3/8	1.2	10.6	**V300500600F**
		700	22	25.25	900	45	60	85	40	42	43	15	3/8	1.4	11.9	**V300500700F**
		800	22	25.25	1000	45	60	85	40	42	43	15	3/8	1.57	13.2	**V300500800F**
		900	22	25.25	1100	45	60	85	40	42	43	15	3/8	1.78	15	**V300500900F**
		1000	22	25.25	1200	45	60	85	40	42	43	15	3/8	2	15.4	**V300501000F**
30	60	100	22	25.25	300	45	70	83	40	42	45	15	3/8	0.3	5.5	**V300600100F**
		200	22	25.25	400	45	70	83	40	42	45	15	3/8	0.6	6.9	**V300600200F**
		300	22	25.25	500	45	70	83	40	42	45	15	3/8	0.9	8.2	**V300600300F**
		400	22	25.25	600	45	70	83	40	42	45	15	3/8	1.15	9.6	**V300600400F**
		500	22	25.25	700	45	70	83	40	42	45	15	3/8	1.45	11	**V300600500F**
		600	22	25.25	800	45	70	83	40	42	45	15	3/8	1.75	12.2	**V300600600F**
		700	22	25.25	900	45	70	83	40	42	45	15	3/8	2	13.6	**V300600700F**
40	70	200	28	30.25	410	55	80	82	50	47	49	15	3/8	0.85	10	**V400700200F**
		300	28	30.25	510	55	80	82	50	47	49	15	3/8	1.2	12	**V400700300F**
		400	28	30.25	610	55	80	82	50	47	49	15	3/8	1.6	14	**V400700400F**
		500	28	30.25	710	55	80	82	50	47	49	15	3/8	2	16	**V400700500F**
		600	28	30.25	810	55	80	82	50	47	49	15	3/8	2.35	18	**V400700600F**
		700	28	30.25	910	55	80	82	50	47	49	15	3/8	2.75	20	**V400700700F**
		800	28	30.25	1010	55	80	82	50	47	49	15	3/8	3	23	**V400700800F**
		1000	28	30.25	1210	55	80	82	50	47	49	15	3/8	3.84	26	**V400701000F**
40	80	200	28	30.25	410	55	90	70	50	47	54	15	3/8	1.1	12.3	**V400800200F**
		300	28	30.25	510	55	90	70	50	47	54	15	3/8	1.6	14.1	**V400800300F**
		400	28	30.25	610	55	90	70	50	47	54	15	3/8	2.1	16.3	**V400800400F**
		500	28	30.25	710	55	90	70	50	47	54	15	3/8	2.6	18.4	**V400800500F**
		600	28	30.25	810	55	90	70	50	47	54	15	3/8	3.1	20.3	**V400800600F**
		700	28	30.25	910	55	90	70	50	47	54	15	3/8	3.6	22.5	**V400800700F**
50	100	300	28	30.25	525	70	115	75	60	47	60	20	1/2	2.5	25	**V500100300F**
		400	28	30.25	625	70	115	75	60	47	60	20	1/2	3.3	28.5	**V500100400F**
		500	28	30.25	725	70	115	75	60	47	60	20	1/2	4.1	32	**V500100500F**
		700	28	30.25	925	70	115	75	60	47	60	20	1/2	5.65	39.1	**V500100700F**
		900	28	30.25	1125	70	115	75	60	47	60	20	1/2	7.25	46.1	**V500100900F**
70	120	500	40	40.5	770	80	140	55	80	65	82	20	1/2	5.9	60	**V700120500F**
		1000	40	40.5	1270	80	140	55	80	65	82	20	1/2	11.55	90	**V700121000F**

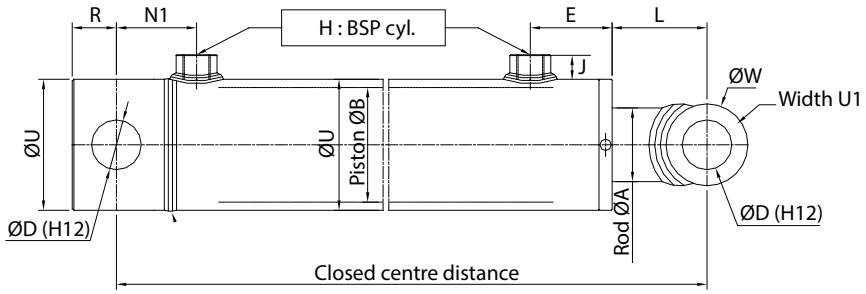

SINGLE-ACTING CYLINDERS WITHOUT FIXINGS

Specifications

- Working pressure: 180 bar.
- Unpainted body.

- Wide range of strokes and diameters.
- Possible to re-use original cylinder fixings.

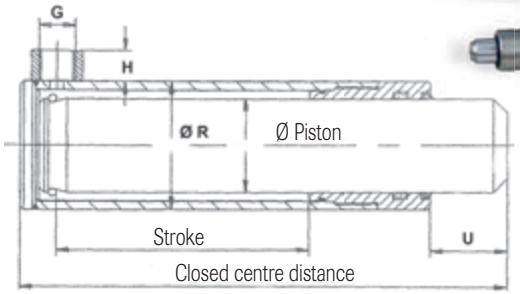

Rod Ø	Stroke	Closed distance	U	Ø R	G	H	Reference
16	50	135	22	35	M14X1.5	16	V000160050SF
	80	165	22	35	M14X1.5	16	V000160080SF
	100	185	22	35	M14X1.5	16	V000160100SF
	150	235	22	35	M14X1.5	16	V000160150SF
	200	285	22	35	M14X1.5	16	V000160200SF
	250	335	22	35	M14X1.5	16	V000160250SF
	300	382	22	35	M14X1.5	16	V000160300SF
20	50	132	22	35	M14X1.5	16	V000200050SF
	100	182	22	35	M14X1.5	16	V000200100SF
	150	232	22	35	M14X1.5	16	V000200150SF
	200	282	22	35	M14X1.5	16	V000200200SF
	250	332	22	35	M14X1.5	16	V000200250SF
	300	382	22	35	M14X1.5	16	V000200300SF
	350	432	22	35	M14X1.5	16	V000200350SF
	400	482	22	35	M14X1.5	16	V000200400SF
	450	532	22	35	M14X1.5	16	V000200450SF
	500	582	22	35	M14X1.5	16	V000200500SF
	600	682	22	35	M14X1.5	16	V000200600SF
	700	782	22	35	M14X1.5	16	V000200700SF
	800	882	22	35	M14X1.5	16	V000200800SF
	900	982	22	35	M14X1.5	16	V000200900SF
	1000	1082	22	35	M14X1.5	16	V000201000SF
25	100	207	22	45	M16X1.5	17	V000250100SF
	150	257	22	45	M16X1.5	17	V000250150SF
	200	307	22	45	M16X1.5	17	V000250200SF
	250	357	22	45	M16X1.5	17	V000250250SF
	300	407	22	45	M16X1.5	17	V000250300SF
	350	457	22	45	M16X1.5	17	V000250350SF
	400	507	22	45	M16X1.5	17	V000250400SF
	450	557	22	45	M16X1.5	17	V000250450SF
	500	607	22	45	M16X1.5	17	V000250500SF
	600	707	22	45	M16X1.5	17	V000250600SF
	700	807	22	45	M16X1.5	17	V000250700SF
	800	907	22	45	M16X1.5	17	V000250800SF
	900	1007	22	45	M16X1.5	17	V000250900SF
	1000	1107	22	45	M16X1.5	17	V000251000SF
30	100	207	22	50	M16X1.5	17	V000300100SF
	150	257	22	50	M16X1.5	17	V000300150SF
	200	307	22	50	M16X1.5	17	V000300200SF
	250	357	22	50	M16X1.5	17	V000300250SF
	300	407	22	50	M16X1.5	17	V000300300SF
	350	457	22	50	M16X1.5	17	V000300350SF
	400	507	22	50	M16X1.5	17	V000300400SF
	450	557	22	50	M16X1.5	17	V000300450SF
	500	607	22	50	M16X1.5	17	V000300500SF
	600	707	22	50	M16X1.5	17	V000300600SF
	700	807	22	50	M16X1.5	17	V000300700SF
	800	907	22	50	M16X1.5	17	V000300800SF
	900	1007	22	50	M16X1.5	17	V000300900SF
	1000	1107	22	50	M16X1.5	17	V000301000SF

Rod Ø	Stroke	Closed distance	U	Ø R	G	H	Reference
35	100	207	22	55	M18X1.5	18	V000350100SF
	150	257	22	55	M18X1.5	18	V000350150SF
	200	307	22	55	M18X1.5	18	V000350200SF
	250	357	22	55	M18X1.5	18	V000350250SF
	300	407	22	55	M18X1.5	18	V000350300SF
	350	457	22	55	M18X1.5	18	V000350350SF
	400	507	22	55	M18X1.5	18	V000350400SF
	450	557	22	55	M18X1.5	18	V000350450SF
	500	607	22	55	M18X1.5	18	V000350500SF
	600	707	22	55	M18X1.5	18	V000350600SF
	700	807	22	55	M18X1.5	18	V000350700SF
	800	907	22	55	M18X1.5	18	V000350800SF
	900	1007	22	55	M18X1.5	18	V000350900SF
	1000	1107	22	55	M18X1.5	18	V000351000SF
40	100	212	22	60	M18X1.5	18	V000400100SF
	150	262	22	60	M18X1.5	18	V000400150SF
	200	312	22	60	M18X1.5	18	V000400200SF
	250	362	22	60	M18X1.5	18	V000400250SF
	300	412	22	60	M18X1.5	18	V000400300SF
	350	462	22	60	M18X1.5	18	V000400350SF
	400	512	22	60	M18X1.5	18	V000400400SF
	450	562	22	60	M18X1.5	18	V000400450SF
	500	612	22	60	M18X1.5	18	V000400500SF
	600	712	22	60	M18X1.5	18	V000400600SF
	700	812	22	60	M18X1.5	18	V000400700SF
	800	912	22	60	M18X1.5	18	V000400800SF
	900	1012	22	60	M18X1.5	18	V000400900SF
	1000	1112	22	60	M18X1.5	18	V000401000SF
45	100	212	22	65	M18X1.5	18	V000450100SF
	150	262	22	65	M18X1.5	18	V000450150SF
	200	312	22	65	M18X1.5	18	V000450200SF
	250	362	22	65	M18X1.5	18	V000450250SF
	300	412	22	65	M18X1.5	18	V000450300SF
	350	462	22	65	M18X1.5	18	V000450350SF
	400	512	22	65	M18X1.5	18	V000450400SF
	450	562	22	65	M18X1.5	18	V000450450SF
	500	612	22	65	M18X1.5	18	V000450500SF
	600	712	22	65	M18X1.5	18	V000450600SF
	700	812	22	65	M18X1.5	18	V000450700SF
	800	912	22	65	M18X1.5	18	V000450800SF
	900	1012	22	65	M18X1.5	18	V000450900SF
	1000	1112	22	65	M18X1.5	18	V000451000SF
50	100	219	22	70	M18X1.5	18	V000500100SF
	150	269	22	70	M18X1.5	18	V000500150SF
	200	319	22	70	M18X1.5	18	V000500200SF
	250	369	22	70	M18X1.5	18	V000500250SF
	300	419	22	70	M18X1.5	18	V000500300SF
	350	469	22	70	M18X1.5	18	V000500350SF
	400	519	22	70	M18X1.5	18	V000500400SF
	450	569	22	70	M18X1.5	18	V000500450SF
	500	619	22	70	M18X1.5	18	V000500500SF
	550	669	22	70	M18X1.5	18	V000500550SF
	600	719	22	70	M18X1.5	18	V000500600SF
	700	819	22	70	M18X1.5	18	V000500700SF
	800	919	22	70	M18X1.5	18	V000500800SF
	900	1019	22	70	M18X1.5	18	V000500900SF
	1000	1119	22	70	M18X1.5	18	V000501000SF
60	100	222	22	80	M18X1.5	18	V000600100SF
	150	272	22	80	M18X1.5	18	V000600150SF
	200	322	22	80	M18X1.5	18	V000600200SF
	250	372	22	80	M18X1.5	18	V000600250SF
	300	422	22	80	M18X1.5	18	V000600300SF
	350	472	22	80	M18X1.5	18	V000600350SF
	400	522	22	80	M18X1.5	18	V000600400SF
	450	572	22	80	M18X1.5	18	V000600450SF
	500	622	22	80	M18X1.5	18	V000600500SF
	550	672	22	80	M18X1.5	18	V000600550SF
	600	722	22	80	M18X1.5	18	V000600600SF
	700	822	22	80	M18X1.5	18	V000600700SF
	800	922	22	80	M18X1.5	18	V000600800SF
	900	1022	22	80	M18X1.5	18	V000600900SF
	1000	1122	22	80	M18X1.5	18	V000601000SF

DOUBLE-ACTING CYLINDERS WITHOUT FIXINGS

Specifications

- Working pressure: 180 bar.
- Unpainted body.

- Wide range of strokes and diameters.
- Possible to re-use original cylinder fixings.
- Simple adaptation.

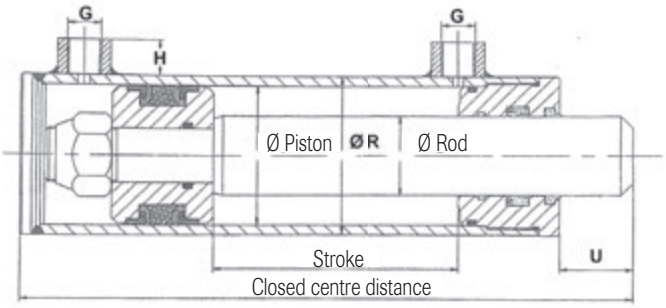

Rod Ø	Piston Ø	Stroke	Closed distance	U	Ø R	G	H	Reference
16	25	50	136	22	35	1/4	16	V160250050SF
	25	80	166	22	35	1/4	16	V160250080SF
	25	100	186	22	35	1/4	16	V160250100SF
	25	150	236	22	35	1/4	16	V160250150SF
	25	200	286	22	35	1/4	16	V160250200SF
	25	250	336	22	35	1/4	16	V160250250SF
	25	300	386	22	35	1/4	16	V160250300SF
	25	350	436	22	35	1/4	16	V160250350SF
	25	400	486	22	35	1/4	16	V160250400SF
	25	450	536	22	35	1/4	16	V160250450SF
	25	500	586	22	35	1/4	16	V160250500SF
20	32	100	230	22	42	1/4	16	V200320100SF
	32	150	280	22	42	1/4	16	V200320150SF
	32	200	330	22	42	1/4	16	V200320200SF
	32	250	380	22	42	1/4	16	V200320250SF
	32	300	430	22	42	1/4	16	V200320300SF
	32	350	480	22	42	1/4	16	V200320350SF
	32	400	530	22	42	1/4	16	V200320400SF
	32	450	580	22	42	1/4	16	V200320450SF
	32	500	630	22	42	1/4	16	V200320500SF
20	35	100	230	22	45	1/4	16	V200350100SF
	35	150	280	22	45	1/4	16	V200350150SF
	35	200	330	22	45	1/4	16	V200350200SF
	35	250	380	22	45	1/4	16	V200350250SF
	35	300	430	22	45	1/4	16	V200350300SF
	35	350	480	22	45	1/4	16	V200350350SF
	35	400	530	22	45	1/4	16	V200350400SF
	35	450	580	22	45	1/4	16	V200350450SF
	35	500	630	22	45	1/4	16	V200350500SF
	35	550	680	22	45	1/4	16	V200350550SF
	35	600	730	22	45	1/4	16	V200350600SF
	35	650	780	22	45	1/4	16	V200350650SF
	35	700	830	22	45	1/4	16	V200350700SF
	35	800	930	22	45	1/4	16	V200350800SF
	35	900	1030	22	45	1/4	16	V200350900SF
	35	1000	1130	22	45	1/4	16	V200351000SF
	35	1100	1230	22	45	1/4	16	V200351100SF
20	40	50	180	22	50	1/4	16	V200400050SF
	40	100	230	22	50	1/4	16	V200400100SF
	40	150	280	22	50	1/4	16	V200400150SF
	40	200	330	22	50	1/4	16	V200400200SF
	40	250	380	22	50	1/4	16	V200400250SF
	40	300	430	22	50	1/4	16	V200400300SF
	40	350	480	22	50	1/4	16	V200400350SF
	40	400	530	22	50	1/4	16	V200400400SF
	40	450	580	22	50	1/4	16	V200400450SF
	40	500	630	22	50	1/4	16	V200400500SF
	40	550	680	22	50	1/4	16	V200400550SF
	40	600	730	22	50	1/4	16	V200400600SF
	40	650	780	22	50	1/4	16	V200400650SF
	40	700	830	22	50	1/4	16	V200400700SF
	40	800	930	22	50	1/4	16	V200400800SF
	40	900	1030	22	50	1/4	16	V200400900SF
	40	1000	1130	22	50	1/4	16	V200401000SF
25	40	100	230	22	50	1/4	16	V250400100SF
	40	150	280	22	50	1/4	16	V250400150SF
	40	200	330	22	50	1/4	16	V250400200SF
	40	250	380	22	50	1/4	16	V250400250SF
	40	300	430	22	50	1/4	16	V250400300SF
	40	350	480	22	50	1/4	16	V250400350SF
	40	400	530	22	50	1/4	16	V250400400SF
	40	450	580	22	50	1/4	16	V250400450SF
	40	500	630	22	50	1/4	16	V250400500SF
	40	550	680	22	50	1/4	16	V250400550SF
	40	600	730	22	50	1/4	16	V250400600SF
	40	650	780	22	50	1/4	16	V250400650SF
	40	700	830	22	50	1/4	16	V250400700SF
	40	800	930	22	50	1/4	16	V250400800SF
	40	900	1030	22	50	1/4	16	V250400900SF
	40	1000	1130	22	50	1/4	16	V250401000SF
25	50	100	240	22	60	3/8	17	V250500100SF
	50	150	290	22	60	3/8	17	V250500150SF
	50	200	340	22	60	3/8	17	V250500200SF
	50	250	390	22	60	3/8	17	V250500250SF
	50	300	440	22	60	3/8	17	V250500300SF
	50	350	490	22	60	3/8	17	V250500350SF
	50	400	540	22	60	3/8	17	V250500400SF
	50	450	590	22	60	3/8	17	V250500450SF
	50	500	640	22	60	3/8	17	V250500500SF
	50	550	690	22	60	3/8	17	V250500550SF
	50	600	740	22	60	3/8	17	V250500600SF
	50	650	790	22	60	3/8	17	V250500650SF
	50	700	840	22	60	3/8	17	V250500700SF
	50	800	940	22	60	3/8	17	V250500800SF
	50	900	1040	22	60	3/8	17	V250500900SF
	50	1000	1140	22	60	3/8	17	V250501000SF
30	50	100	240	22	60	3/8	17	V300500100SF
	50	120	260	22	60	3/8	17	V300500120SF
	50	150	290	22	60	3/8	17	V300500150SF
	50	180	320	22	60	3/8	17	V300500180SF
	50	200	340	22	60	3/8	17	V300500200SF
	50	250	390	22	60	3/8	17	V300500250SF
	50	300	440	22	60	3/8	17	V300500300SF
	50	350	490	22	60	3/8	17	V300500350SF
	50	400	540	22	60	3/8	17	V300500400SF
	50	450	590	22	60	3/8	17	V300500450SF
	50	500	640	22	60	3/8	17	V300500500SF
	50	550	690	22	60	3/8	17	V300500550SF

Electric cylinders See page 190

Cylinders with fixings See page 158

Fixings for cylinders See page 164

Telescopic cylinders See page 166

DOUBLE-ACTING CYLINDERS WITHOUT FIXINGS (CONT.)

Rod Ø	Piston Ø	Stroke	Closed distance	U	Ø R	G	H	Reference
30	50	600	740	22	60	3/8	17	V300500600SF
	50	650	790	22	60	3/8	17	V300500650SF
	50	700	840	22	60	3/8	17	V300500700SF
	50	750	890	22	60	3/8	17	V300500750SF
30	60	100	260	23	70	3/8	17	V300600100SF
	60	150	310	23	70	3/8	17	V300600150SF
	60	200	360	23	70	3/8	17	V300600200SF
	60	250	410	23	70	3/8	17	V300600250SF
	60	300	460	23	70	3/8	17	V300600300SF
	60	350	510	23	70	3/8	17	V300600350SF
	60	400	560	23	70	3/8	17	V300600400SF
	60	450	610	23	70	3/8	17	V300600450SF
	60	500	660	23	70	3/8	17	V300600500SF
	60	550	710	23	70	3/8	17	V300600550SF
	60	600	760	23	70	3/8	17	V300600600SF
	60	650	810	23	70	3/8	17	V300600650SF
	60	700	860	23	70	3/8	17	V300600700SF
	60	800	960	23	70	3/8	17	V300600800SF
	60	900	1060	23	70	3/8	17	V300600900SF
	60	1000	1160	23	70	3/8	17	V300601000SF
35	60	100	260	23	70	3/8	17	V350600100SF
	60	150	310	23	70	3/8	17	V350600150SF
	60	200	360	23	70	3/8	17	V350600200SF
	60	250	410	23	70	3/8	17	V350600250SF
	60	300	460	23	70	3/8	17	V350600300SF
	60	350	510	23	70	3/8	17	V350600350SF
	60	400	560	23	70	3/8	17	V350600400SF
	60	450	610	23	70	3/8	17	V350600450SF
	60	500	660	23	70	3/8	17	V350600500SF
	60	550	710	23	70	3/8	17	V350600550SF
	60	600	760	23	70	3/8	17	V350600600SF
	60	650	810	23	70	3/8	17	V350600650SF
	60	700	860	23	70	3/8	17	V350600700SF
	60	800	960	23	70	3/8	17	V350600800SF
	60	900	1060	23	70	3/8	17	V350600900SF
	60	1000	1160	23	70	3/8	17	V350601000SF
40	60	100	260	23	70	3/8	17	V400600100SF
	60	150	310	23	70	3/8	17	V400600150SF
	60	200	360	23	70	3/8	17	V400600200SF
	60	250	410	23	70	3/8	17	V400600250SF
	60	300	460	23	70	3/8	17	V400600300SF
	60	350	510	23	70	3/8	17	V400600350SF
	60	400	560	23	70	3/8	17	V400600400SF
	60	450	610	23	70	3/8	17	V400600450SF
	60	500	660	23	70	3/8	17	V400600500SF
	60	550	710	23	70	3/8	17	V400600550SF
	60	600	760	23	70	3/8	17	V400600600SF
	60	650	810	23	70	3/8	17	V400600650SF
	60	700	860	23	70	3/8	17	V400600700SF
	60	800	960	23	70	3/8	17	V400600800SF
	60	900	1060	23	70	3/8	17	V400600900SF
	60	1000	1160	23	70	3/8	17	V400601000SF
	60	1100	1260	23	70	3/8	17	V400601100SF
	60	1200	1360	23	70	3/8	17	V400601200SF
	60	1300	1460	23	70	3/8	17	V400601300SF
	60	1400	1560	23	70	3/8	17	V400601400SF
	60	1500	1660	23	70	3/8	17	V400601500SF
30	70	100	260	23	80	3/8	17	V300700100SF
	70	150	310	23	80	3/8	17	V300700150SF
	70	200	360	23	80	3/8	17	V300700200SF
	70	250	410	23	80	3/8	17	V300700250SF
	70	300	460	23	80	3/8	17	V300700300SF
	70	350	510	23	80	3/8	17	V300700350SF
	70	400	560	23	80	3/8	17	V300700400SF
	70	450	610	23	80	3/8	17	V300700450SF
	70	500	660	23	80	3/8	17	V300700500SF
	70	550	710	23	80	3/8	17	V300700550SF

Electric cylinders See page 190

Cylinders with fixings See page 158

Fixings for cylinders See page 164

Telescopic cylinders See page 166

Rod Ø	Piston Ø	Stroke	Closed distance	U	Ø R	G	H	Reference
30	70	600	760	23	80	3/8	17	V300700600SF
	70	650	810	23	80	3/8	17	V300700650SF
	70	700	860	23	80	3/8	17	V300700700SF
	70	750	910	23	80	3/8	17	V300700750SF
	70	800	960	23	80	3/8	17	V300700800SF
	70	900	1060	23	80	3/8	17	V300700900SF
	70	1000	1160	23	80	3/8	17	V300701000SF
35	70	100	260	23	80	3/8	17	V350700100SF
	70	150	310	23	80	3/8	17	V350700150SF
	70	200	360	23	80	3/8	17	V350700200SF
	70	250	410	23	80	3/8	17	V350700250SF
	70	300	460	23	80	3/8	17	V350700300SF
	70	350	510	23	80	3/8	17	V350700350SF
	70	400	560	23	80	3/8	17	V350700400SF
	70	450	610	23	80	3/8	17	V350700450SF
	70	500	660	23	80	3/8	17	V350700500SF
	70	550	710	23	80	3/8	17	V350700550SF
	70	600	760	23	80	3/8	17	V350700600SF
	70	650	810	23	80	3/8	17	V350700650SF
	70	700	860	23	80	3/8	17	V350700700SF
	70	800	960	23	80	3/8	17	V350700800SF
	70	900	1060	23	80	3/8	17	V350700900SF
	70	1000	1160	23	80	3/8	17	V350701000SF
40	70	100	260	23	80	3/8	17	V400700100SF
	70	150	310	23	80	3/8	17	V400700150SF
	70	200	360	23	80	3/8	17	V400700200SF
	70	250	410	23	80	3/8	17	V400700250SF
	70	300	460	23	80	3/8	17	V400700300SF
	70	350	510	23	80	3/8	17	V400700350SF
	70	400	560	23	80	3/8	17	V400700400SF
	70	450	610	23	80	3/8	17	V400700450SF
	70	500	660	23	80	3/8	17	V400700500SF
	70	550	710	23	80	3/8	17	V400700550SF
	70	600	760	23	80	3/8	17	V400700600SF
	70	650	810	23	80	3/8	17	V400700650SF
	70	700	860	23	80	3/8	17	V400700700SF
	70	800	960	23	80	3/8	17	V400700800SF
	70	900	1060	23	80	3/8	17	V400700900SF
	70	1000	1160	23	80	3/8	17	V400701000SF
35	80	100	280	25	95	3/8	18	V350800100SF
	80	150	330	25	95	3/8	18	V350800150SF
	80	180	360	25	95	3/8	18	V350800180SF
	80	200	380	25	95	3/8	18	V350800200SF
	80	250	430	25	95	3/8	18	V350800250SF
	80	300	480	25	95	3/8	18	V350800300SF
	80	350	530	25	95	3/8	18	V350800350SF
	80	400	580	25	95	3/8	18	V350800400SF
	80	450	630	25	95	3/8	18	V350800450SF
	80	500	680	25	95	3/8	18	V350800500SF
	80	550	730	25	95	3/8	18	V350800550SF
	80	600	780	25	95	3/8	18	V350800600SF
	80	650	830	25	95	3/8	18	V350800650SF
	80	700	880	25	95	3/8	18	V350800700SF
	80	800	980	25	95	3/8	18	V350800800SF
	80	900	1080	25	95	3/8	18	V350800900SF
	80	1000	1180	25	95	3/8	18	V350801000SF
40	80	100	280	25	95	1/2	18	V400800100SF
	80	150	330	25	95	1/2	18	V400800150SF
	80	200	380	25	95	1/2	18	V400800200SF
	80	250	430	25	95	1/2	18	V400800250SF
	80	300	480	25	95	1/2	18	V400800300SF
	80	350	530	25	95	1/2	18	V400800350SF
	80	400	580	25	95	1/2	18	V400800400SF
	80	450	630	25	95	1/2	18	V400800450SF
	80	500	680	25	95	1/2	18	V400800500SF
	80	550	730	25	95	1/2	18	V400800550SF

Headquarters: +33 (0)2 51 34 10 10 / UK: +44 (0)1728 684 800

DOUBLE-ACTING CYLINDERS WITHOUT FIXINGS (CONT.)

Rod Ø	Piston Ø	Stroke	Closed distance	U	Ø R	G	H	Reference
	80	600	780	25	95	1/2	18	**V400800600SF**
	80	650	830	25	95	1/2	18	**V400800650SF**
	80	700	880	25	95	1/2	18	**V400800700SF**
	80	800	980	25	95	1/2	18	**V400800800SF**
	80	900	1080	25	95	1/2	18	**V400800900SF**
	80	1000	1180	25	95	1/2	18	**V400801000SF**
50	80	100	280	25	95	1/2	18	**V500800100SF**
	80	150	330	25	95	1/2	18	**V500800150SF**
	80	200	380	25	95	1/2	18	**V500800200SF**
	80	250	430	25	95	1/2	18	**V500800250SF**
	80	300	480	25	95	1/2	18	**V500800300SF**
	80	350	530	25	95	1/2	18	**V500800350SF**
	80	400	580	25	95	1/2	18	**V500800400SF**
	80	450	630	25	95	1/2	18	**V500800450SF**
	80	500	680	25	95	1/2	18	**V500800500SF**
	80	550	730	25	95	1/2	18	**V500800550SF**
	80	600	780	25	95	1/2	18	**V500800600SF**
	80	650	830	25	95	1/2	18	**V500800650SF**
	80	700	880	25	95	1/2	18	**V500800700SF**
	80	800	980	25	95	1/2	18	**V500800800SF**
	80	900	1080	25	95	1/2	18	**V500800900SF**
	80	1000	1180	25	95	1/2	18	**V500801000SF**
	80	1200	1380	25	95	1/2	18	**V500801200SF**
	80	1500	1680	25	95	1/2	18	**V500801500SF**
50	90	100	280	54	105	1/2	18	**V500900100SF**
	90	150	330	54	105	1/2	18	**V500900150SF**
	90	200	380	54	105	1/2	18	**V500900200SF**
	90	250	430	54	105	1/2	18	**V500900250SF**
	90	300	480	54	105	1/2	18	**V500900300SF**
	90	350	530	54	105	1/2	18	**V500900350SF**
	90	400	580	54	105	1/2	18	**V500900400SF**
	90	450	630	54	105	1/2	18	**V500900450SF**
	90	500	680	54	105	1/2	18	**V500900500SF**
	90	550	730	54	105	1/2	18	**V500900550SF**
	90	600	780	54	105	1/2	18	**V500900600SF**
	90	700	880	54	105	1/2	18	**V500900700SF**
	90	800	980	54	105	1/2	18	**V500900800SF**
	90	900	1080	54	105	1/2	18	**V500900900SF**
	90	1000	1180	54	105	1/2	18	**V500901000SF**
50	100	100	310	25	115	1/2	18	**V501000100SF**
	100	150	360	25	115	1/2	18	**V501000150SF**
	100	200	410	25	115	1/2	18	**V501000200SF**
	100	250	460	25	115	1/2	18	**V501000250SF**
	100	300	510	25	115	1/2	18	**V501000300SF**
	100	350	560	25	115	1/2	18	**V501000350SF**
	100	400	610	25	115	1/2	18	**V501000400SF**
	100	450	660	25	115	1/2	18	**V501000450SF**
	100	500	710	25	115	1/2	18	**V501000500SF**
	100	550	760	25	115	1/2	18	**V501000550SF**
	100	600	810	25	115	1/2	18	**V501000600SF**
	100	650	860	25	115	1/2	18	**V501000650SF**
	100	700	910	25	115	1/2	18	**V501000700SF**
	100	800	1010	25	115	1/2	18	**V501000800SF**
	100	900	1110	25	115	1/2	18	**V501000900SF**
	100	1000	1210	25	115	1/2	18	**V501001000SF**
	100	1100	1310	25	115	1/2	18	**V501001100SF**
60	100	100	310	25	115	1/2	18	**V601000100SF**
	100	150	360	25	115	1/2	18	**V601000150SF**
	100	200	410	25	115	1/2	18	**V601000200SF**
	100	250	460	25	115	1/2	18	**V601000250SF**
	100	300	510	25	115	1/2	18	**V601000300SF**
	100	350	560	25	115	1/2	18	**V601000350SF**
	100	400	610	25	115	1/2	18	**V601000400SF**
	100	450	660	25	115	1/2	18	**V601000450SF**
	100	500	710	25	115	1/2	18	**V601000500SF**
	100	550	760	25	115	1/2	18	**V601000550SF**
	100	600	810	25	115	1/2	18	**V601000600SF**

Electric cylinders See page 190

Cylinders with fixings See page 158

Fixings for cylinders See page 164

Telescopic cylinders See page 166

Rod Ø	Piston Ø	Stroke	Closed distance	U	Ø R	G	H	Reference
60	100	650	860	25	115	1/2	18	**V601000650SF**
	100	700	910	25	115	1/2	18	**V601000700SF**
	100	800	1010	25	115	1/2	18	**V601000800SF**
	100	900	1110	25	115	1/2	18	**V601000900SF**
	100	1000	1210	25	115	1/2	18	**V601001000SF**
	100	1200	1410	25	115	1/2	18	**V601001200SF**
	100	1500	1710	25	115	1/2	18	**V601001500SF**
70	120	200	390	25	140	1/2	18	**V701200200SF**
	120	250	440	25	140	1/2	18	**V701200250SF**
	120	300	490	25	140	1/2	18	**V701200300SF**
	120	350	540	25	140	1/2	18	**V701200350SF**
	120	400	590	25	140	1/2	18	**V701200400SF**
	120	450	640	25	140	1/2	18	**V701200450SF**
	120	500	690	25	140	1/2	18	**V701200500SF**
	120	550	740	25	140	1/2	18	**V701200550SF**
	120	600	790	25	140	1/2	18	**V701200600SF**
	120	700	890	25	140	1/2	18	**V701200700SF**
	120	800	990	25	140	1/2	18	**V701200800SF**
	120	900	1090	25	140	1/2	18	**V701200900SF**
	120	1000	1190	25	140	1/2	18	**V701201000SF**
	120	1200	1390	25	140	1/2	18	**V701201200SF**
	120	1500	1690	25	140	1/2	18	**V701201500SF**
75	140	100	350	50	170	1/2	18	**V751400100SF**
	140	150	400	50	170	1/2	18	**V751400150SF**
	140	200	450	50	170	1/2	18	**V751400200SF**
	140	300	550	50	170	1/2	18	**V751400300SF**
	140	400	650	50	170	1/2	18	**V751400400SF**
	140	500	750	50	170	1/2	18	**V751400500SF**
	140	600	850	50	170	1/2	18	**V751400600SF**
	140	700	950	50	170	1/2	18	**V751400700SF**

TRAILER BRAKE KITS

A hydraulic cylinder operates on the original equipment mechanical braking system.

• Safety: greater control of the tractor and trailer.

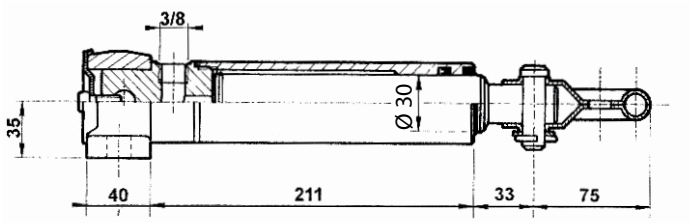

Composition

- 1 or 2 single-acting cylinders.
- 2 or 4 return springs.
- 1 x 4 m hose with unions.
- 1 brake valve.
- 1 installation instruction.

The hydraulic brake system is mandatory from a gross laden weight of 3500 kg upwards.

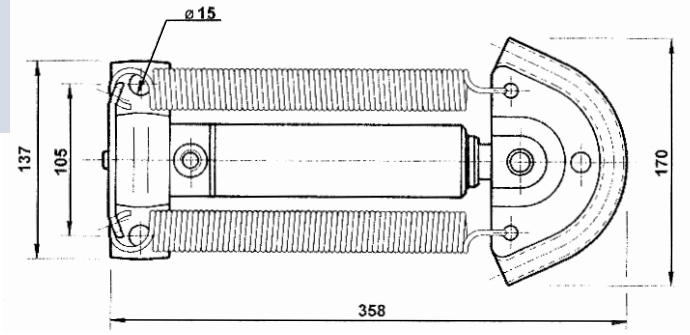

References

Name	Reference
On 1 axle	**504100**
On 2 axles	**504102**

FIXINGS FOR CYLINDERS

Round agricultural ball joints

Recommended bore diameter	D	T	U	W	X	α	Ref.
32-40	19.5	54	43.8	12.5	27.5	40	**R19**
50-60	22.5	52	50.8	18	40	40	**R22**
50-60	25.8	65	50.8	17	40	40	**R25**
70-80	28.8	75	50.8	18	40	40	**R28**
70-80-90	32.4	85	50.8	22	50	24	**R32**

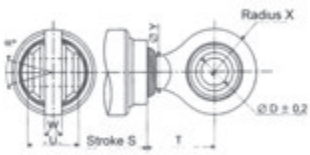

Flat agricultural ball joints

Recommended bore diameter	D	K	U	W	X	α	Ref.
32-40	19.5	54	43.8	12.5	25	40	**PF19**
50	22.5	52	50.8	18	33	40	**PF22**
50-60	25.8	65	50.8	17	39	40	**PF25**
70	28.8	75	50.8	18	39	40	**PF28**
70-80	32.4	85	50.8	22	50	24	**PF32**

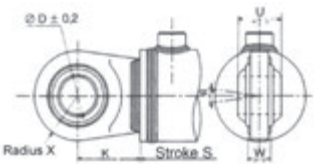

FIXINGS FOR CYLINDERS (CONT.)

Male tenons

Recommended bore diameter	D	K	R	U	Ref.
32	15.2	38	15	15	**TM0150**
40	20.4	50	20	20	**TM0200**
50-60	25.4	67	25	29	**TM0250**
60-70	30.4	74	30	35	**TM0300**
70-80	35.4	86	35	40	**TM0350**
80-90	40.4	98	40	45	**TM0400**
90	40.4	110	40	50	**TM0401**

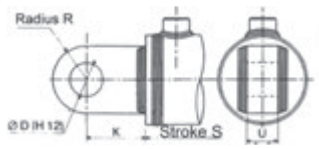

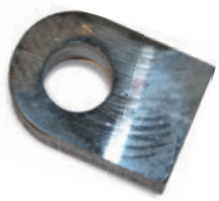

Round industrial ball joints

Recommended bore diameter	D	K	Q	U	W	Y	Ref.
32	15	31	12	40	21	51	**GK15DO**
40	20	38	16	53	27.5	64.5	**GK20DO**
50-60	25	45	20	64	33.5	77	**GK25DO**
60-70	30	51	22	73	40	87.5	**GK30DO**
70-80	35	61	25	82	47	102	**GK35DO**
80-80	40	69	28	92	52	115	**GK40DO**
-	50	88	35	112	62	144	**GK50DO**
-	60	100	44	135	70	167.5	**GK60DO**
-	80	141	55	160	95	231	**GK80DO**

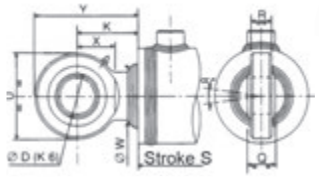

Transverse tubes

Recommended bore diameter	D	T	U	W	Reference
32	15.2	14	45	28	**TLT0150**
40	20.4	18	55	36	**TLT0200**
50	25.4	21	65	42	**TLT0250**
60	25.4	21	75	42	**TLT0251**
60	30.4	25	75	50	**TLT0300**
70	30.4	25	85	50	**TLT0301**
70	30.4	25	95	50	**TLT0350**
80	35.4	30	85	60	**TLT0302**
80	35.4	30	95	60	**TLT0351**
80	35.4	30	105	60	**TLT0400**
90	40.4	35	95	60	**TLT0352**
90	40.4	35	105	70	**TLT0401**

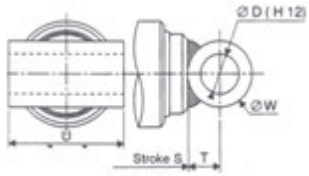

Female screw-on ball joints

d	B	D	E	H	C	W	α	L	i	Reference
10	9	29	10x1.5	43	7	17	12	20	15	**RVF10**
15	12	40	14x2	61	10	22	8	30	20	**RVF15**
20	16	53	20x1.5	77	13	32	9	40	27	**RVF20**
25	20	64	24x2	94	17	36	7	48	32	**RVF25**
30	22	73	30x2	110	19	41	6	45	37	**RVF30**
35	25	82	36x3	125	21	50	6	60	42	**RVF35**
40	28	92	39x3	142	23	55	7	65	48	**RVF40**

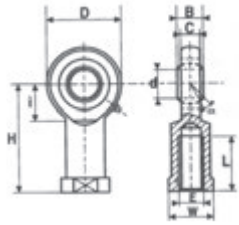

Male screw-on ball joints

d	B	D	F	H	C	α	L	i	Y	Z	Reference
10	9	29	10x1.5	48	7	12	26	15	17	5	**RVM10**
15	12	40	14x2	63	10	8	34	20	22	7	**RVM15**
20	16	86	20x1.5	78	13	9	43	27	30	10	**RVM20**
25	20	97	24x2	94	17	7	53	32	36	12	**RVM25**
30	22	73	30x2	110	19	6	65	37	46	15	**RVM30**
35	25	82	36x3	140	21	6	82	42	55	18	**RVM35**
40	28	92	39x3	150	23	7	86	48	60	19.5	**RVM40**

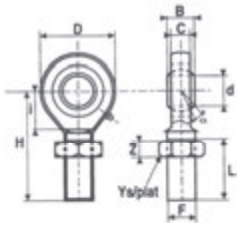

Clevises

Recommended bore diameter	D	K	R	U	W	X	Y	Reference
32	15.2	38	6	15	53	6	30	**CH015**
40	20.4	50	8	20	70	8	40	**CH020**
50-60	25.4	67	12	29	92	12	50	**CH025**
60-70-80	30.4	74	8	35	104	14	60	**CH030**
70-80	35.4	86	10	40	121	16	70	**CH035**
80-90	40.4	98	10	45	138	18	80	**CH040**

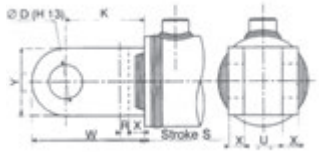

SINGLE-ACTING TELESCOPIC CYLINDERS WITH TRUNNION MOUNTS AND BALL JOINTS

Reference	Closed distance	Rod Ø								Stroke	A	Ø B	C	D	E	L	R	G	I	J	VOL	F	Swivel joints
		1	2	3	4	5	6	7	8														
V20760795HRD	150	61	76							795	95	35	410	40	110	560	415	95	55	55	3	5.5	1
V30760893HRD	142	46	61	76						893	112	35	310	40	110	452	315	95	45	45	2.8	5	1
V30911043HRD	152	61	76	91						1043	95	35	365	40	128	517	375	112	55	55	5	8	1
V31071043HRD	152	68	88	107						1043	95	40	365	40	144	517	372	124	55	55	6.6	11	1
V31071283HRD	152	68	88	107						1283	95	40	445	40	144	597	450	124	55	55	8.2	11	1
V31261273HRD	165	88	107	126						1273	107	45	445	45	172	610	455	152	65	60	12	16	1
V31261483HRD	165	88	107	126						1483	107	65	515	45	172	680	525	152	65	60	13.8	16	1
V41070670HRD	157	61	76	91	107					670	95	40	185	40	144	342	200	124	55	55	41	10	1
V41070830HRD	157	61	76	91	107					830	95	40	225	40	144	382	240	124	55	55	5	10	1
V41071050HRD	157	61	76	91	107					1050	95	40	280	40	144	437	290	124	55	55	6.2	10	1
V41071190HRD	157	61	76	91	107					1190	95	40	315	40	144	472	325	124	55	55	7	10	1
V41261040HRD	162	68	88	107	126					1040	95	45	278	45	172	440	295	152	55	55	8.3	14	1
V41451030HRD	244	88	107	126	145					1030	107	50	205	45	193	449	230	170	65	60	11.7	20	2
V41451970HRD	244	88	107	126	145					1970	107	50	440	45	193	684	450	170	65	60	22.2	20	2
V41651010HRD	253	107	126	145	165					1010	150	50	210	45	220	463	240	190	73	69	15.8	25	2
V41651670HRD	253	107	126	145	165					1670	150	50	375	45	220	628	390	190	73	69	25.6	25	2
V41651950HRD	256	107	126	145	165					1950	150	50	445	45	220	698	460	190	73	69	29.7	25	2
V51071040HRD	150	46	61	76	91	107				1040	112	40	225	40	144	375	237	124	45	45	5	8	1
V51652450HRD	245	88	107	126	145	165				2450	107	50	440	45	220	695	460	190	65	60	32.8	22	2
V61451345HRD	240	61	76	91	107	126	145			1345	95	50	170	45	193	410	197	170	55	55	12	13	2
V61451470HRD	240	61	76	91	107	126	145			1470	95	50	190	45	193	430	215	170	55	55	13	13	2
V71872550HRD	250	68	88	107	126	145	165	187		2550	107	50	325	50	245	575	348	215	65	60	35	22	2
V82102615HRD	255	68	88	107	126	145	165	187	210	2615	150	55	305	50	273	560	335	240	73	69	41	25	2

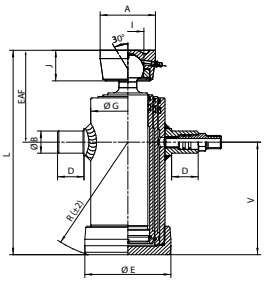

SWIVEL JOINTS

See table references		Parachute valve	Reference
1	Smooth polished tube, 17 mm	No	RT17D
1	Male DIN 15L	No	RT15LD1
1	Female ½ BSP	Yes	CBMF181A012G
2	Male DIN 15L	No	RT15LD
2	Female ½ BSP	Yes	CBMF221A012G

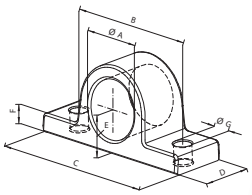

BEARINGS

Diameter	ØA	B	C	D	E	F	ØG	Weight (kg)	Bearing reference
Ø35	35.5	95	130	45	30	12	13	1	PVT35D
Ø40	40.5	105	140	45	33	15	15	1.2	PVT40D
Ø40	45.5	105	140	45	33	15	15	1.2	PVT45D
Ø50	50.5	120	155	50	37	17	15	1.5	PVT50D

SINGLE-ACTING TELESCOPIC CYLINDERS WITH TRUNNION MOUNTS AND BORED ROD

- Wide range: many references in stock.
- Interchangeable with other brands.
- "TENIFER" or TPQ rod treatment (on request).
- Pushing force up to 50 tons (contact us).
- Easy adaptation with numerous fixing options.
- Easy maintenance, screwed head.

Bottom mounted

Cradle cylinders Contact us

Cylinders for tri-sided tipper bodies with holes in base Contact us

Top mounted

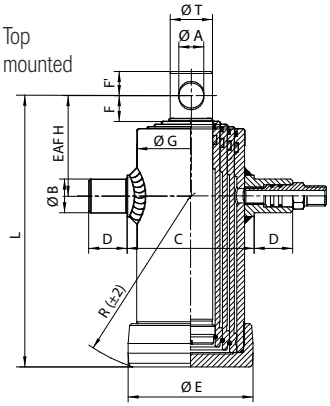

Bottom mounted

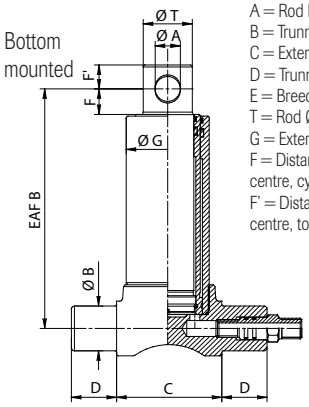

A = Rod hole Ø.
B = Trunnion Ø.
C = External Ø without trunnion.
D = Trunnion length.
E = Breech Ø.
T = Rod Ø.
G = External body Ø.
F = Distance between rod head base and hole centre, cylinder side.
F' = Distance between rod head top and hole centre, top rod side.

Top mounted

SINGLE-ACTING TELESCOPIC CYLINDERS WITH TRUNNION MOUNTS AND BORED ROD (CONT.)

Reference	Closed distance		Rod Ø						Stroke	A	Ø B		C	D		T	E	L	R	G	F	F'	VOL	F	Swivel joint
	Top mounted model	Bottom mounted model	1	2	3	4	5	6			Top mounted model	Bottom mounted model		H	B										
V20610455BD		340	46	61					455	26		45	105		45	44				80	27	25	1.1	3.5	1
V20610525•D	100	375	46	61					525	26	35	45	105	40	45	44	95	375	280	80	27	25	1.3	3.5	1
V20610595•D	100	410	46	61					595	26	35	45	105	40	45	44	95	412	315	80	27	25	1.5	3.5	1
V20610695BD		460	46	61					695	26		45	105		45	44				80	27	25	1.7	3.5	1
V20610795•D	100	510	46	61					795	26	35	45	105	40	45	44	95	510	413	80	27	25	2	3.5	1
V20760495BD		368	61	76					495	31		45	115		45	59				95	32	30	2	5.5	1
V20760595•D	105	418	61	76					595	31	35	45	115	40	45	59	110	415	315	95	32	30	2.3	5.5	1
V20760695•D	105	468	61	76					695	31	35	45	115	40	45	59	110	465	365	95	32	30	2.7	5.5	1
V20760795•D	105	518	61	76					795	31	35	45	115	40	45	59	110	515	415	95	32	30	3	5.5	1
V20880595BD		430	68	88					595	36		45	130		45	66				106	32	30	3	9	1
V20880695HD	115		68	88					695	36	35		130	40		66	122	480	370	106	42	30	3.5	9	1
V20880795•D	115	530	68	88					795	36	35	45	130	40	45	66	122	530	420	106	32	30	4	9	1
V20880895•D	115	580	68	88					895	36	35	45	130	40	45	66	122	580	470	106	32	30	4.5	9	1
V21070895•D	115	580	88	107					895	36	40	45	150	40	45	86	144	580	472	124	42	30	6.8	13	1
V21071095•D	115	680	88	107					1095	36	40	45	150	40	45	86	144	680	570	124	42	30	8.3	13	1
V21071195HD	115		88	107					1195	36	40		150	40		86	144	760	650	124	42	30	10	13	1
V21071395HD	115		88	107					1395	36	40		150	40		86	144	860	750	124	42	30	11.6	13	1
V30760500BD		282	46	61	76				500	26		45	115		45	44				95	32	25	1.6	5	1
V30760593•D	102	312	46	61	76				593	26	35	45	115	40	45	44	110	312	220	95	32	25	2	5	1
V30760790BD		377	46	61	76				790	26		45	115		45	44				95	27	25	2.5	5.5	1
V30760893•D	102	412	46	61	76				893	26	35	45	115	40	45	44	110	412	315	95	32	25	2.8	5	1
V30761043BD		462	46	61	76				1043	26		45	115		45	44				95	32	25	3.3	5	1
V30761283HD	102		46	61	76				1283	26	35		115	40		44				95	32	25	4	5.5	1
V30910893•D	107	422	61	76	91				893	31	35	45	135	40	45	59	128	422	325	112	32	30	4.2	8	1
V30911043•D	107	472	61	76	91				1043	31	35	45	135	40	45	59	128	472	375	112	32	30	5	8	1
V30911283BD		552	61	76	91				1283	31		45	135		45	59				112	32	30	6	8	1
V31070893•D	117	432	68	88	107				893	36	40	45	150	40	45	66	144	432	325	124	42	30	5.7	11	1
V31071043•D	117	482	68	88	107				1043	36	40	45	150	40	45	66	144	482	372	124	42	30	6.6	11	1
V31071283•D	117	562	68	88	107				1283	36	40	45	150	40	45	66	144	562	450	124	42	30	8.2	11	1
V31071493BD		632	68	88	107				1493	36		45	150		45	66				124	42	30	9.4	11	1
V31261273•D	125	570	88	107	126				1273	36	45	45	175	45	45	86	172	570	455	152	42	30	12	16	1
V31261483•D	125	640	88	107	126				1483	36	45	45	175	45	45	86	172	640	525	152	42	30	13.8	16	1
V31262093BD		870	88	107	126				2093	36		45	175		45	86				152	42	30	20	16	1
V41070670HD	112		61	76	91	107			670	31	40		150	40		59	144	297	200	124	32	30	4	10	1
V41071290•D	112	452	61	76	91	107			1290	31	40	45	150	40	45	59	144	452	350	124	32	30	7.5	10	1
V41071510HD	112		61	76	91	107			1510	31	40		150	40		59	144	507	405	124	32	30	8.8	10	1
V41261040HD	130		68	88	107	126			1040	36	45		175	45		66	172	408	295	152	42	30	8.3	14	1
V41261500•D	130	525	68	88	107	126			1500	36	45	45	175	45	45	66	172	525	405	152	42	30	12	14	1
V41261700•D	130	575	68	88	107	126			1700	36	45	45	175	45	45	66	172	575	455	152	42	30	13.5	14	1
V41261980•D	130	645	68	88	107	126			1980	36	45	45	175	45	45	66	172	645	523	152	42	30	15.6	14	1
V41451210BD		475	88	107	126	145			1210	36		50	210		50	86				170	42	30	13.7	20	2
V41451490•D	200	545	88	107	126	145			1490	36	50	50	210	45	50	86	205	520	335	170	42	30	16.8	20	2
V41451690•D	200	595	88	107	126	145			1690	36	50	50	210	45	50	86	205	570	385	170	42	30	19	20	2
V41451970•D	200	665	88	107	126	145			1970	36	50	50	210	45	50	86	205	640	450	170	42	30	22.2	20	2
V41452120HD	203		88	107	126	145			2190	36	50		210	45		86	200	723	528	169	36	30	27	20	2
V41452510•D	200	825	88	107	126	145			2510	36	50	50	210	45	50	86	205	800	610	170	42	30	30	20	2
V41651670HD	212		107	126	145	165			1670	46	50		230	45		105	220	587	390	190	52	35	25.6	25	2
V41651950HD	212		107	126	145	165			1950	46	50		230	45		105	220	657	460	190	52	35	29.7	25	2
V41652190HD	202		107	126	145	165			2190	46	50		230	45		105	220	737	545	190	52	35	33	25	2
V41652510HD	212		107	126	145	165			2510	46	50		230	45		105	220	817	615	190	52	35	40	25	2
V51261480HD	120		61	76	91	107	126		1480	31	45		175	45		59	172	435	330	152	30	32	11	11	1
V51452990HD	205		68	88	107	126	145		2990	36	50		210	45		66	205	775	580	170	42	30	29	16	2
V51651850HD	205		88	107	126	145	165		1850	36	50		230	45		86	220	525	340	190	42	30	25	22	2
V51652100HD	205		88	107	126	145	165		2100	36	50		230	45		86	220	575	390	190	42	30	28.2	22	2
V51652450HD	205		88	107	126	145	165		2450	36	50		230	45		86	220	655	460	190	42	30	32.8	22	2
V51652990HD	205		88	107	126	145	165		2990	36	50		230	45		86	220	775	580	190	42	30	40	22	2
V61653585HD	208		68	88	107	126	145	165	3585	36	50		230	45		66	220	783	585	190	42	30	42	20	2

• Top mounting: H • Bottom mounting: B **Nominal working pressure: 180 bar**

Cradle cylinders Contact us

Cylinders for tri-sided tipper bodies with holes in base Contact us

LOG SPLITTER CYLINDERS

Specifications

- Working pressure: 200 bar.
- Temperature: -30° to 90°C.
- Hardened chrome stainless steel rod.

A	B	Z stroke	E	C	D	F	G	H	I	J	K	L	M	N	P	Reference*
55	90	1000	170	140	30	30	100	55	30	53	65	1135	BSP 3/8"	40	40	**V550901000FENDE**
70	100	1000	215	145	30	30	110	50	30	67	65	1135	BSP 1/2"	50	50	**V701001000FENDE**

* Supplied without bearing

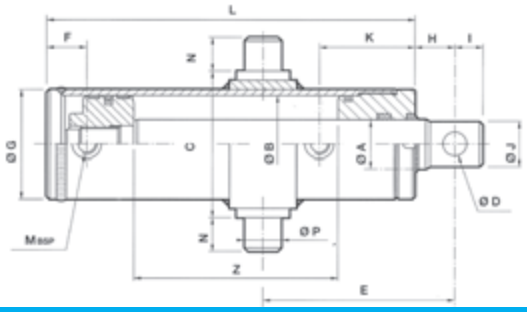

Log splitter kit available Contact us

LOG SPLITTER CYLINDER BEARINGS

For cylinder	Diameter	ØA	B	C	D	E	F	ØG	Weight (kg)	Bearing reference
V550901000FENDE	Ø40	40.5	105	140	45	33	15	15	1.2	**PVT40D**
V701001000FENDE	Ø50	50.5	120	155	50	37	17	15	1.5	**PVT50D**

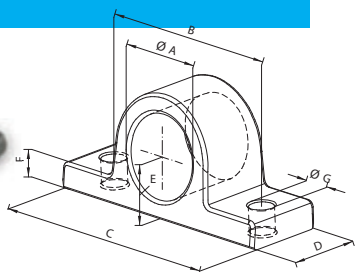

TRAILER JACK AND JACK KITS

Jacks with clevis mounting

Load at 200 bar (N.m)	T	C	F	L	S	Jack with clevis mounting reference
6	65	250	85	405	160	**800538F1**
10	85	250	105	405	230	**800540F1**

Jack kits for trailers

- Practical: one single reference includes pump, jack and connector assembly.

Name	Diameter	Reference
One jack + one clevis mounting + one isolating valve + screw connectors + 2.60 m hose	65	**800538RF1**
	85	**800540RF1**
One jack + one clevis mounting +one manual pump + hoses and unions	65	**800538PMF1**
	85	**800540PMF1**

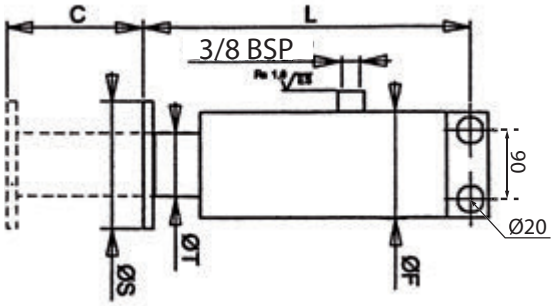

Manual pumps See page 97

TUROLLA HIGH-SPEED MOTORS

Coding

M	2	0	8	D	1	8	B	B	S

Port dimensions

Code	Group
1	Group 1
2	Group 2
3	Group 3

Displacement code
See tables on following pages

Type of port

Type of shaft
See drawings on following pages

Type of front flange
See drawings on following pages

Code	Direction of rotation
D	Clockwise
S	Anti-clockwise
B	Bidirectional with external drain
I	Bidirectional with internal drain

Port types and dimensions

Type of port	Side	Distance dimensions code (mm)										
		A	B	C	D	E	F	L	H	I	J	K
German (square) **Code A**	Suction	30	40	55	35							
	Delivery	30	35	55	35							
Italian (diamond) **Code B**	Suction	26	30	40	40	51	51	62	62			
	Delivery	26	30	30	40	40	51	51	62			
BSP **Code G**	Suction	3/8"	1/2"	1/2"	3/4"	3/4"	1"	1"	1"1/4	1"1/4	1"1/2	1"
	Delivery	3/8"	3/8"	1/2"	1/2"	3/4"	3/4"	1"	1"	1"1/4	1"1/4	1/2"
ISO (rectangular) **Code C**	Suction	38x17	48x22	48x22	52x26	52x26	59x30	59x30	59x30	70x36	70x36	70x36
	Delivery	38x17	38x17	48x22	48x22	52x26	48x22	52x26	59x30	52x26	59x30	70x36

Group	FRONT FLANGE CODES		SHAFT CODES	
	Code	Description	Code	Description
Group 1	1	4-hole, 52.4 x 71.9, Ø centring 25.4 mm	6	Ø12 mm cylindrical
	2	4-hole, 56 x 73, Ø centring 30 mm	8	1/8 taper
Group 2	1	4-hole, 71.5 x 96.2, Ø centring 36.5 mm	0	Ø 15.456 mm, SAE A 9-tooth splined
	2	4-hole, 72 x 100 mm, Ø centring 80 mm	4	Ø 15.875 mm, SAE A cylindrical
	3	2-hole, 60 x 60 mm, Ø centring 50 mm	5	1/5 taper
	4		7	Ø 16.5 mm, DIN 5482 (B17x14) 9-tooth splined
			8	1/8 taper
	5	4-hole, 60 x 60 mm, Ø centring 52 mm	9	Tang drive
	8	SAE A distance 106.38 mm, Ø centring 82.55mm	R	Ø 15 mm, cylindrical
Group 3	1	98.4 x 128.1 mm, Ø centring 50.80 mm	3	Ø 22.22 mm, SAE B 13-tooth splined
			4	Ø 22.22 mm, SAE B cylindrical
	9	SAE B distance 146.05 mm, Ø centring 101.60 mm	8	1/8 taper

TUROLLA GROUP 1 high-speed motors

Displ. code	Displ. cm³/rev	Peak pressure (bar)	Working pressure (bar)	Minimum speed (rpm)	Maximum speed (rpm)	Torque at 150 bar (N.m)	A (mm)	B (mm)	Distance D Suction (mm)	Distance D Delivery (mm)
26	2.6	270	250	1000	4000	5.8	40.5	85.0	26	26
32	3.2	270	250	1000	4000	6.4	41.5	87.0	26	26
38	3.8	270	250	1000	3000	7.8	42.5	89.0	26	26
43	4.3	270	250	800	3000	9.2	43.5	91.0	26	26
60	6	250	230	800	2000	13	46.75	97.5	26	26
78	7.8	220	200	800	2000	16.8	50.0	104.0	26	26

Flange 1 — **Shaft 8**

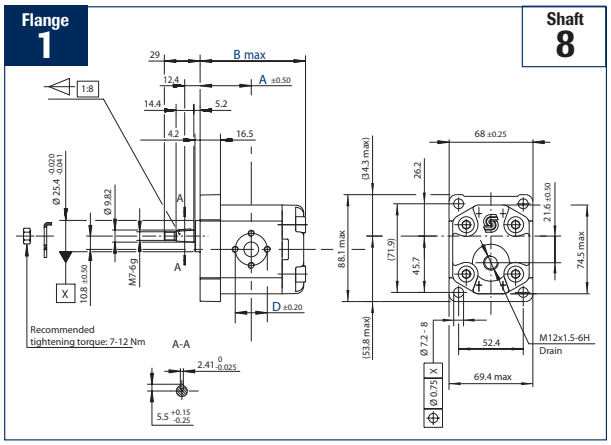

Flange 2 — **Shaft 6**

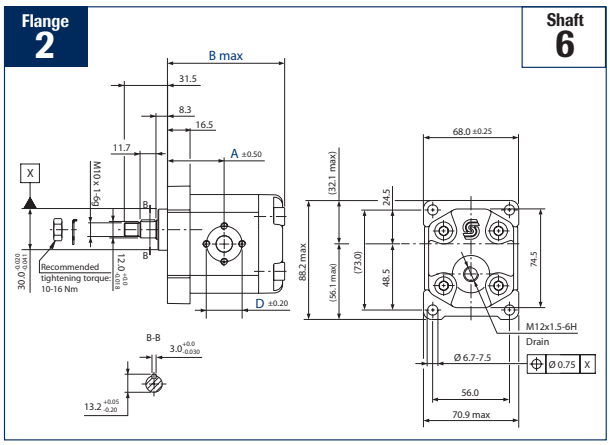

TUROLLA HIGH-SPEED MOTORS (CONT.)

TUROLLA GROUP 2 high-speed motors

Displ. code	Displ. cm³/rev	Peak pressure (bar)	Working pressure (bar)	Minimum speed (rpm)	Maximum speed (rpm)	Torque at 100 bar (N.m)	Front flange 1				Front flange 2				Front flanges 3, 4, 5				Front flange 8			
							A (mm)	B (mm)	D suction side (mm)	D delivery side (mm)	A (mm)	B (mm)	D suction side (mm)	D delivery side (mm)	A (mm)	B (mm)	D suction side (mm)	D delivery side (mm)	A (mm)	B (mm)	C suction side (mm)	C delivery side (mm)
06	6.0	280	250	700	4000	9	45	93.5	30	30	41	96	40	35	38.6	85	40	35	45	93.5	1/2 BSP	1/2 BSP
08	8.4	280	250	700	4000	12	45	97.5	30	30	43.1	100	40	35	40.6	89	40	35	47	97.5	1/2 BSP	1/2 BSP
11	10.8	280	250	700	4000	15	49	101.5	30	30	47.5	104	40	35	45	93	40	35	49	101.5	3/4 BSP	1/2 BSP
14	14.4	280	250	700	4000	21	52	107.5	40	30	47.5	110	40	35	45	99	40	35	52	107.5	3/4 BSP	1/2 BSP
17	16.8	260	230	500	4000	24	52	111.5	40	30	47.5	114	40	35	45	103	40	35	54	111.5	3/4 BSP	1/2 BSP
19	19.2	230	210	500	3500	30	56	111.5	40	30	47.5	118	40	35	45	107	40	35	56	115.5	3/4 BSP	1/2 BSP
22	22.8	200	180	500	3500	33	59	121.5	40	30	55	124	40	35	52.5	113	40	35	59	121.5	3/4 BSP	1/2 BSP
25	25.2	180	160	500	3500	37	59	125.5	40	40	64.5	128	40	35	62	117	40	35	61	125.5	1" BSP	3/4 BSP

Member of the Danfoss Group
TUROLLA
fast forward thinking

Flange 1 — Shaft 7 — Shaft 8 — Shaft R

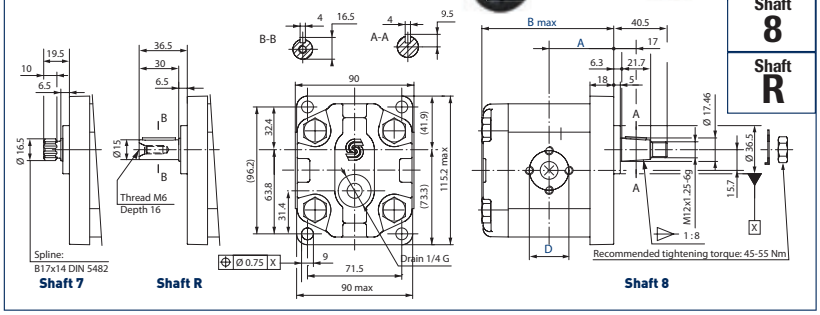

Flange 2 — Shaft 5 — Shaft 7

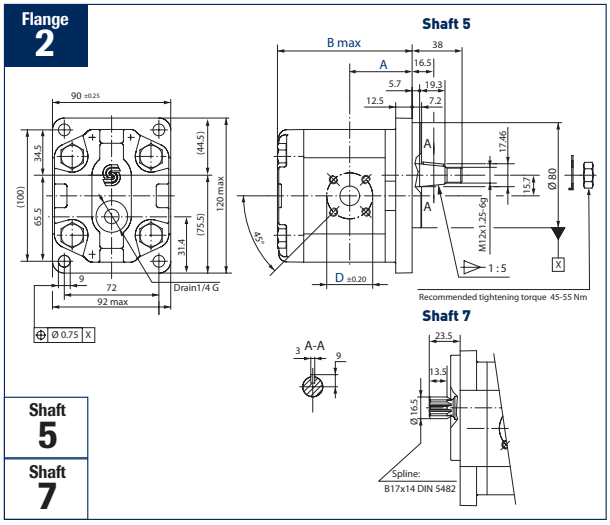

Flange 3 — Flange 4 — Shaft 5 — Shaft 7

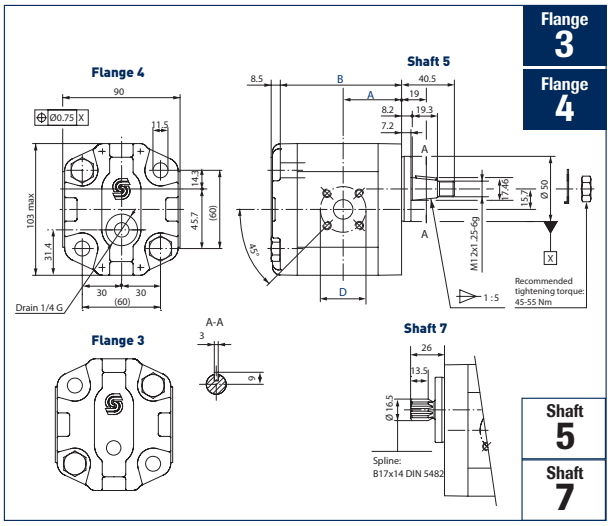

Flange 5 — Shaft 9

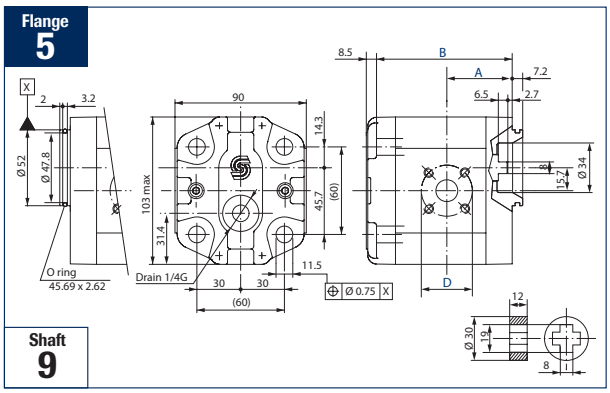

Flange 8 — Shaft 0 — Shaft 4

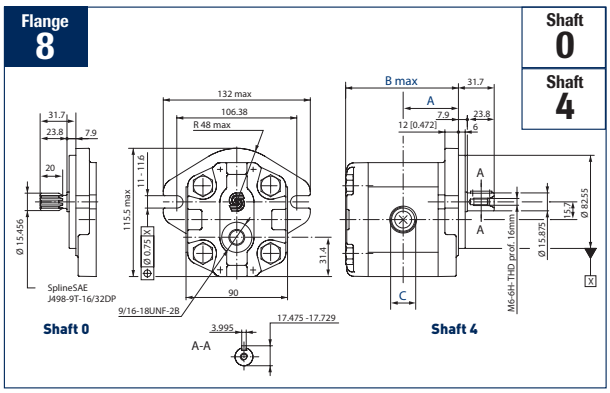

TUROLLA HIGH-SPEED MOTORS (CONT.)

TUROLLA GROUP 3 high-speed motors

- Displacement 22 to 90 cm³/rev.

Displ. code	Displ. cm³/rev	Peak pressure (bar)	Working pressure (bar)	Minimum speed (rpm)	Maximum speed (rpm)	Torque at 100 bar (N.m)	A (mm)	B (mm)	Front flange 1		Front flange 9	
									D suction side (mm)	D delivery side (mm)	ExD suction side (mm)	ExD delivery side (mm)
22	22.1	270	250	800	2500	29	63.0	132.5	40	40	52x26	48x22
26	26.2	270	250	800	2500	36	64.5	135.5	40	40	52x26	48x22
33	33.1	270	250	800	2500	42	67.0	140.5	51	40	59x30	52x26
38	37.9	270	250	800	2500	47	68.8	144.0	51	40	59x30	52x26
44	44.1	270	250	800	2300	57	71.0	148.5	51	51	59x30	52x26
48	48.3	250	230	800	2300	68	72.5	151.5	51	51	59x30	52x26
55	55.2	230	210	800	2300	79	75.0	156.5	51	51	70x36	59x30
63	63.4	210	190	800	2300	89	78.0	162.5	62	51	70x36	59x30
75	74.4	190	170	800	2100	100	82.0	170.5	62	51	70x36	59x30
90	88.2	170	150	800	2100	-	87.0	180.5	62	51	70x36	59x30

Member of the Danfoss Group
TUROLLA
fast forward thinking

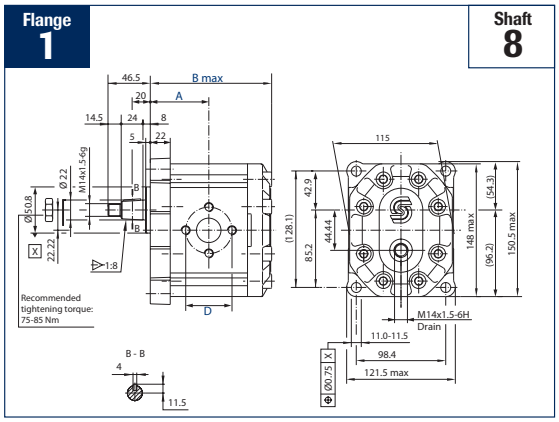

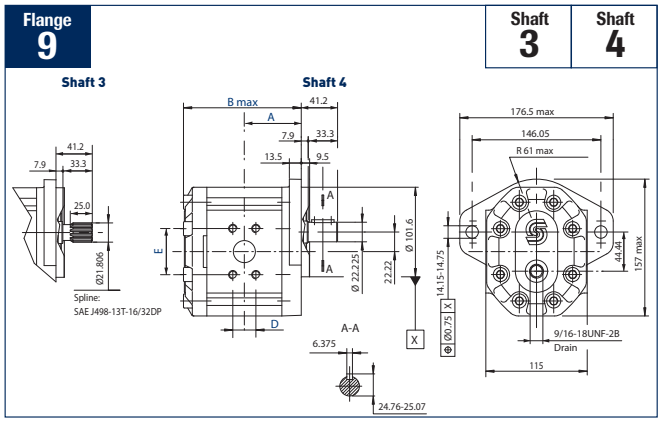

Back pressure accepted for motors in groups 2 and 3

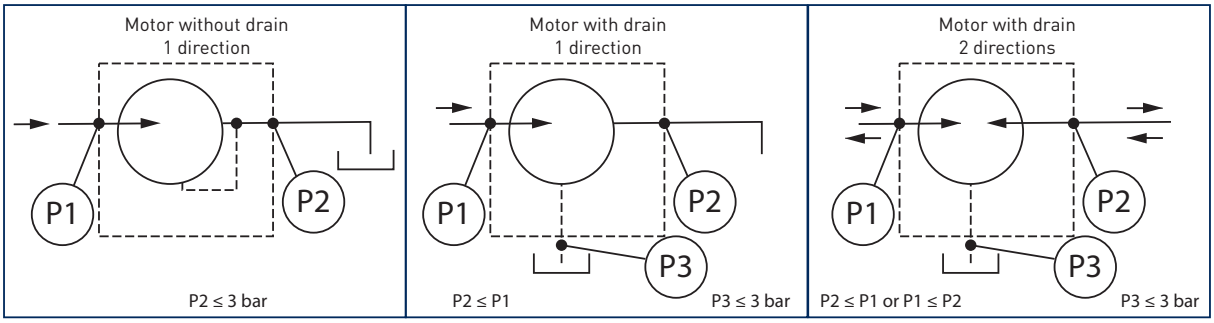

HPI GROUP 2 HIGH-SPEED MOTORS

Contact us

Specifications

JTEKT HPI

- Displacement 6.45 to 31.2 cm³/rev.
- Direction of rotation: clockwise (right), anti-clockwise (left) or bidirectional with drain.
- Diamond, square and rectangular flanges.

MOTOR TORQUE

C = (716 X P) / N

N = speed in rpm

C = torque in daN.m

P = power in hp

BOSCH REXROTH PISTON MOTORS

A2FM motors

- Fixed displacement motors, open and closed circuits.

- Standard motors to suit all applications.
- Possibility of direct installation of brake valve.
- Integrated or post installed flushing valve.
- Mounting flange in the centre of the casing ensures easy integration onto mechanical transmissions.

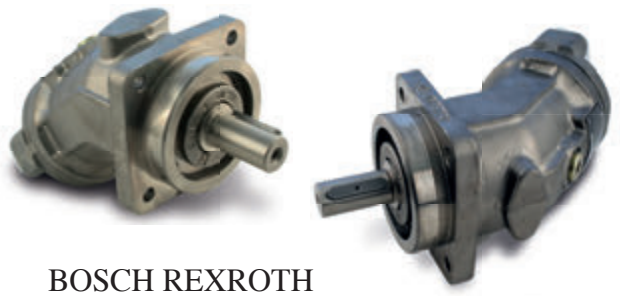

BOSCH REXROTH

Displ. code	Displ. cm³/rev	Nominal pressure (bar)	Peak pressure (bar)	Rotation speed (rpm)	Absorbed flow rate (l/min)	Power (kW)	Torque (N.m)	Weight (kg)
5	4.93	315	350	10000	49	26	25	2.5
10	10.3	400	450	8000	82	55	65	5.4
12	12	400	450	8000	96	64	76	5.4
16	16	400	450	8000	128	85	100	5.4
23	22.9	400	450	6300	144	96	144	9.5
28	28.1	400	450	6300	176	118	178	9.5
32	32	400	450	6300	201	134	204	9.5
45	45.6	400	450	5600	255	170	290	13.5
56	56.1	400	450	5000	280	187	356	18
63	63	400	450	5000	315	210	400	18
80	80.4	400	450	4500	360	241	508	23
90	90	400	450	4500	405	270	572	23
107	106.7	400	450	4000	427	285	680	32
125	125	400	450	4000	500	333	796	32
160	160.4	400	450	3600	577	385	1016	45
180	180	400	450	3600	648	432	1144	45
200	200	400	450	2750	550	367	1272	66
250	250	350	400	2500	625	365	1391	73
355	355	350	400	2240	795	464	1979	110
500	500	350	400	2000	1000	583	2785	185
710	710	350	400	1600	1136	663	3955	322
1000	1000	350	400	1600	1600	933	5570	336

DANFOSS PISTON MOTORS

90 series fixed displacement

Specifications

- Closed circuit.
- Displacement 42 to 130 cm³/rev.
- Optional purge valve.
- Rear or lateral port.

Contact us

Displ. code	Nominal rotation speed (rpm)	Maximum rotation speed (rpm)	Theoretical torque (N.m/bar)	Inertia torque (kg.m²)	Front flange types	Ports	Drive shaft options	Weight (kg)
42	4200	4600	0.67	0.0023	SAE B	Underneath	Splined	15
55	3900	4250	0.88	0.0060	SAE C, cartridge	Underneath, at rear	Splined, taper, cylindrical	22
75	3600	3950	1.19	0.0096	SAE C, cartridge	Underneath, at rear	Splined, taper, cylindrical	26
100	3300	3650	1.59	0.0150	SAE C	Underneath	Splined, taper, cylindrical	34
130	3100	3400	2.07	0.0230	SAE D	Underneath	Splined	45

Danfoss

Contact us

51 series variable displacement

Specifications

- Closed circuit.
- Displacement 60 to 250 cm³/rev.
- Wide range of regulating and adjustment possibilities.
- Optional speed sensor.
- SAE or DIN flange 4-bolt mountings, or 2-bolt flange mounting in cartridge motor version.
- Min and max mechanical displacement limitation.
- Splined shaft according to ANSI or DIN standards.

Maximum displ. (cm³/rev)	Minimum displ. (cm³/rev)	Nominal flow rate (l/min)	Maximum flow rate (l/min)	Power (kW)	Nominal speed (rpm)		Maximum speed (rpm)		Inertia torque (kg. m²)	Weight (kg)
					at max. displ.	at min. displ.	at max. displ.	at min. displ.		
60	**12**	216	264	336	3600	5600	4400	7000	0.0046	28
80.7	**16.1**	250	323	403	3100	5000	4000	6250	0.0071	32
109.9	**22**	308	396	492	2800	4500	3600	5600	0.0128	44
160.9	**32.2**	402	515	644	2500	4000	3200	5000	0.0234	56
250	**50**	550	675	850	2200	3400	2700	4250	0.0480	86

Casing pressure	
Nominal pressure	**3 bar**
Maximum pressure (cold start)	**5 bar**
Minimum pressure (at max. speed)	**1 bar**

Pressure range, input	
Maximum Δp	**450 bar**
Minimum pressure	**10 bar**
Maximum pressure	**510 bar**

Headquarters: +33 (0)2 51 34 10 10 / UK: +44 (0)1728 684 800

OML MEDIUM-SPEED MOTORS

Specifications

- 1/4"BSP ports.
- Cylindrical shaft Ø16 mm.
- Maximum continuous entry pressure: 140 bar.

Displ. (cm³/rev)	Rotation speed (rpm)		Torque (N.m)		Maximum continuous power (kW)	Max. continuous pressure drop (bar)	Max. continuous oil flow rate (l/min)	L_{max} (mm)	L¹ (mm)	Weight (kg)	Sauer Danfoss reference	Hydrokit reference (lateral ports)
	Maximum continuous	Maximum intermittent	Maximum continuous	Minimum startup								
8	2000	2500	7	5	1.1	70	16	102.5	4.1	1.0	151G2001	**MHL08A0L**
12.5	1280	1600	11	9	1.1	70	16	104.8	6.4	1.0	151G2002	**MHL12A0L**
20	800	1000	18	15	1.1	70	16	108.6	10.2	1.1	151G2003	**MHL20A0L**
32	500	625	29	24	1.1	70	16	114.7	16.3	1.2	151G2004	**MHL32A0L**

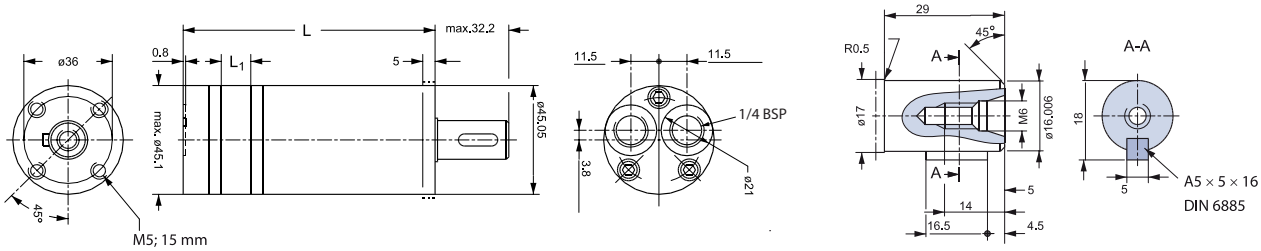

OMM MEDIUM-SPEED MOTORS

Specifications

- 3/8"BSP ports.
- Maximum continuous entry pressure: 175 bar.

Coding

M	H	M	0	8	A	0	L

Displacement code
See table

Type of shaft	
A0	Cylindrical shaft Ø16 mm, parallel key A5x5x16 according to DIN 6885
C0	Splined shaft B17x14 according to DIN 5482

Position of openings	
A	Rear
L	Lateral

Displ. code	Displ. (cm³/rev)	Rotation speed (rpm)		Torque (N.m)		Maximum continuous power (kW)	Max. continuous pressure drop (bar)	Max. continuous oil flow rate (l/min)	L_{max} (mm)	L¹ (mm)	Weight (kg)
		Maximum continuous	Maximum intermittent	Maximum continuous	Minimum startup						
08	8.2	1950	2450	11	7	1.8	100	16	104.0	3.5	1.9
12	12.5	1550	1940	16	12	2.4	100	20	106.0	5.5	2.0
20	19.9	1000	1250	25	21	2.4	100	20	109.0	8.5	2.1
32	31.6	630	800	40	34	2.4	100	20	114.0	13.5	2.2
50	50	400	500	46	41	1.8	70	20	122.0	21.5	2.4

Front flange option See page 177

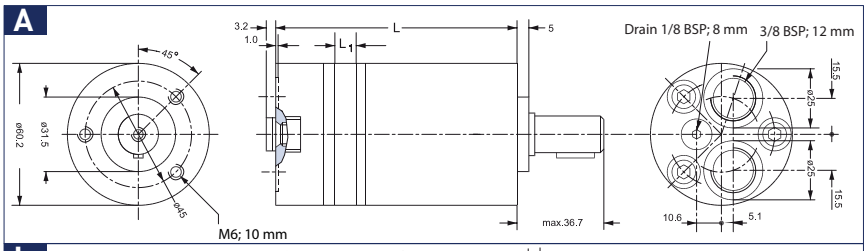

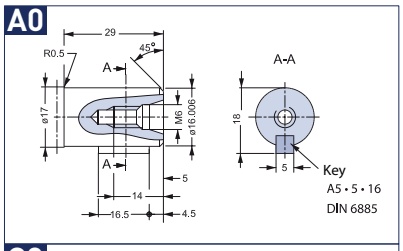

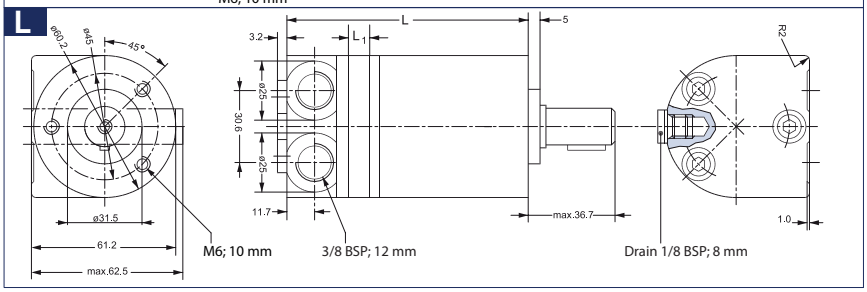

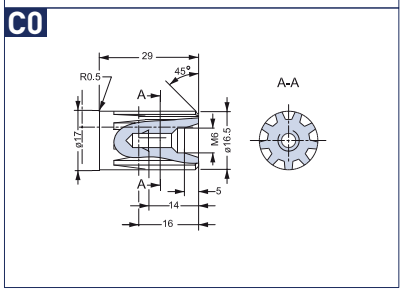

OMP/OMR MEDIUM-SPEED MOTORS

Specifications

- Maximum continuous entry pressure: 175 bar.
- With drain.

Flow regulation See pages 101-110
Overcentre valves See page 155
Anti-shock Anti-cavitation See page 157
Pressure relief valve See page 115
Brake See page 177

Coding

M	H	P	0	5	0	A	1	A	D

Type of motor	
P	OMP type (Hydrokit MHP)
R	OMR type (Hydrokit MHR)

Displacement code
See tables

Type of shaft	
A1	Cylindrical shaft Ø25 mm, parallel key A8x7x32 according to DIN 6885
A2	Cylindrical shaft Ø1", parallel key 1/4" x 1/4" x 1"1/4 according to B.S.46
A3	Cylindrical shaft Ø32 mm, parallel key A10x8x45 according to DIN 6885 **ONLY AVAILABLE IN OMR VERSION**
C1	Splined shaft, straight-sided teeth, centring at base of teeth: according to B.S.2059 (SAE 6 B). Class 2. Nominal dimension 1"

OMP type (Hydrokit MHP)

Displ. code	Displ. (cm³/rev)	Rotation speed (rpm)		Torque (N.m)		Maximum continuous power (kW)	Max. continuous pressure drop (bar)	Max. continuous oil flow rate (l/min)	Lmax (mm)	L1 (mm)
		Maximum continuous	Maximum intermittent	Maximum continuous	Minimum startup					
025	25	1600	1800	33	30	4.5	100	40	130.0	4.1
032	32	1560	1720	43	40	5.8	100	50	131.0	5.2
040	40	1500	1750	52	45	7	100	60	132.0	6.5
050	48.6	1230	1540	93	80	10	140	60	132.0	6.5
080	77.8	770	960	150	135	10	140	60	136.0	10.4
100	97.3	615	770	190	170	11	140	60	138.5	13.0
125	125	480	600	240	210	10	140	60	142.0	16.7
160	155.7	385	480	300	280	10	140	60	146.5	20.8
200	194.6	310	385	300	270	8	115	60	151.5	26.0
250	242.3	250	310	300	280	6	90	60	158.0	32.5
315	306.1	195	245	300	280	5	75	60	166.5	40.9
400	389.2	155	190	300	280	4	60	60	177.6	52.0

OMR type (Hydrokit MHR)

Displ. code	Displ. (cm³/rev)	Rotation speed (rpm)		Torque (N.m)		Maximum continuous power (kW)	Max. continuous pressure drop (bar)	Max. continuous oil flow rate (l/min)	Lmax (mm)	L1 (mm)
		Maximum continuous	Maximum intermittent	Maximum continuous	Minimum startup					
050	51.6	775	970	100	80	7	140	40	136.5	9.0
080	80.3	750	940	195	150	12.5	175	60	141.5	14.0
100	99.8	600	750	240	200	13	175	60	145.0	17.4
125	125.7	475	600	300	250	12.5	175	60	149.5	21.8
160	159.6	375	470	300	240	10	130	60	155.5	27.8
200	199.8	300	375	300	260	8	110	60	162.5	34.8
250	249.3	240	300	300	240	6	80	60	171.5	43.5
315	315.7	190	240	300	260	5	70	60	182.5	54.8
375	372.6	160	200	300	240	4	55	60	192.7	65.0
* Cylindrical shaft Ø32 mm: 68.3 mm max.										

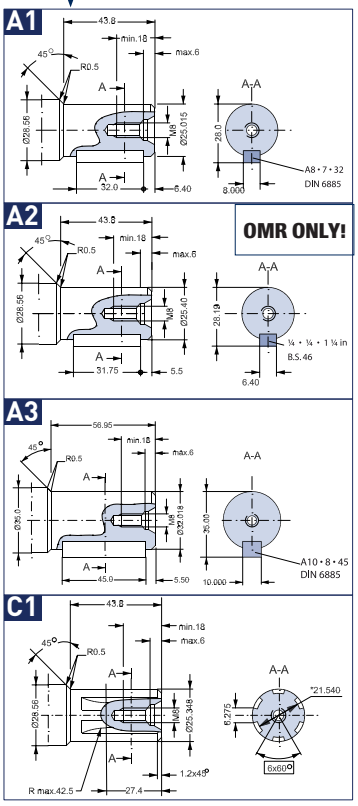

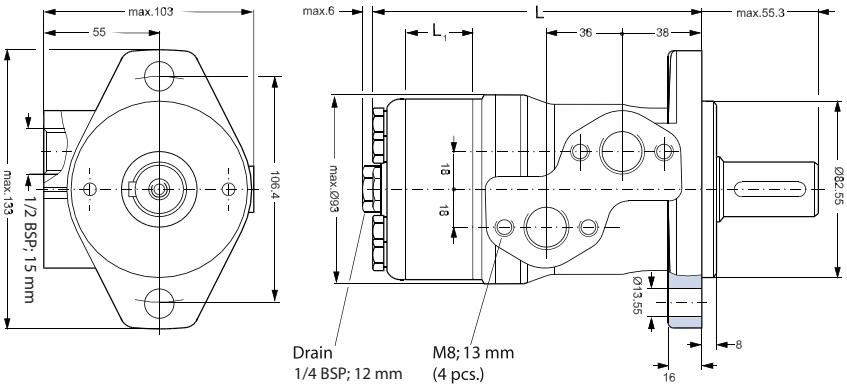

OMS MEDIUM-SPEED MOTORS

Specifications

- Maximum continuous entry pressure: 230 bar.
- Maximum continuous exhaust pressure: 140 bar.

Displ. code	Displ. (cm³/rev)	Rotation speed (rpm)		Torque (N.m)		Maximum continuous power (kW)	Max. continuous pressure drop (bar)	Max. continuous oil flow rate (l/min)	Lmax (mm)	L1 (mm)	L2 (mm)	L3 (mm)	
		Maximum continuous	Maximum intermittent	Maximum continuous	Minimum startup							All shafts except PTO	PTO shaft
080	80.5	810	1000	240	180	15.5	210	65	167	14	124	67	109
100	100	750	900	305	230	18	210	75	170	17.4	127	67	109
125	125.7	600	720	375	290	18	210	75	175	21.8	132	67	109
160	159.7	470	560	490	370	16.5	210	75	181	27.8	138	67	109
200	200	375	450	610	470	16.5	210	75	188	34.8	145	67	109
250	250	300	360	720	560	14.5	200	75	196	43.5	153	67	109
315	314.9	240	285	825	710	15	200	75	208	54.8	165	67	109
400	393	190	230	865	710	11	160	75	221	68.4	178	67	109

Pressure relief valve See page 115

Coding

M	H	S	0	8	0	A	1	A	D

Displacement code
See table

Type of shaft	
A3	Cylindrical shaft Ø32 mm, parallel key A10x8x45 according to DIN 6885
C2	Splined shaft (ANS B92.1 - 1970) with flat base, side adjustment, size 12/24, 14 teeth. External Ø 1"1/4. Pressure angle 30°.
K1	Taper shaft Ø35 mm (ISO R775)
C4	PTO shaft (DIN 9611 class 1)

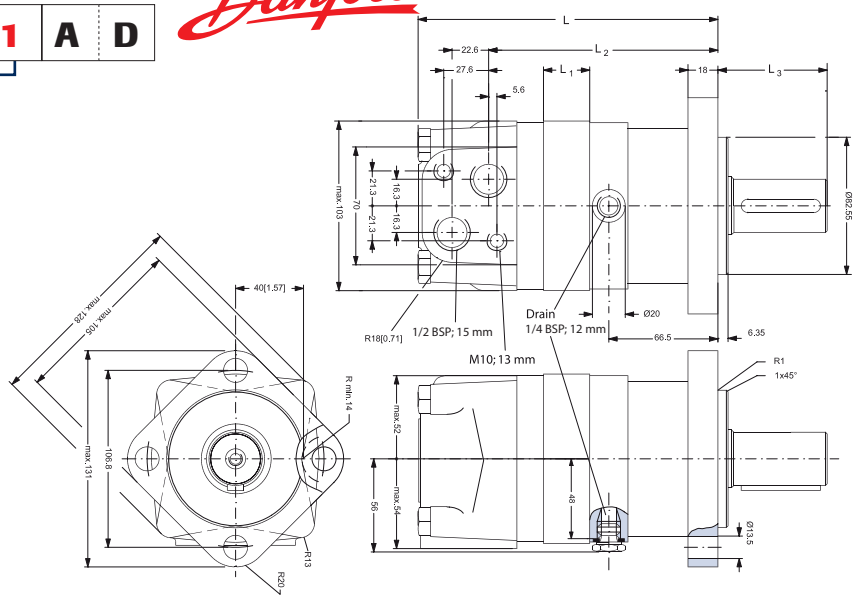

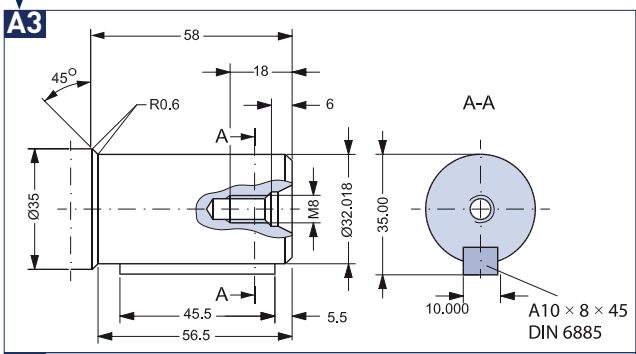

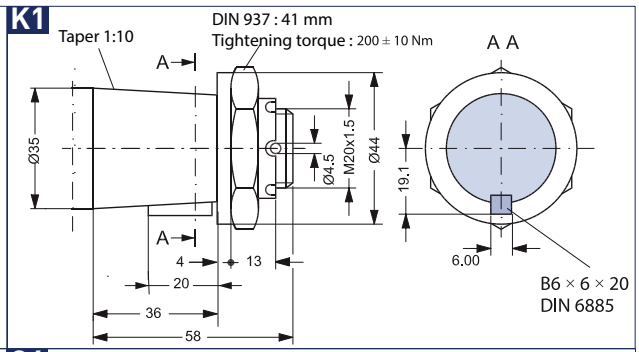

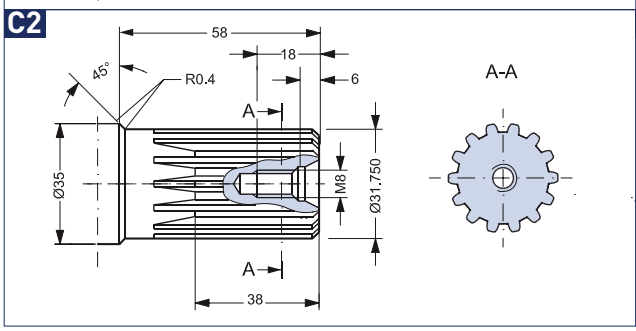

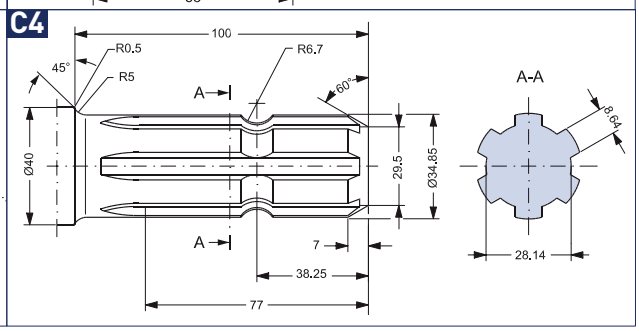

OMT MEDIUM-SPEED MOTORS

Specifications

- Maximum continuous entry pressure: 210 bar.
- Maximum continuous exhaust pressure: 140 bar.

Displ. code	Displ. (cm³/rev)	Rotation speed (rpm)		Torque (N.m)		Maximum continuous power (kW)	Max. continuous pressure drop (bar)	Max. continuous oil flow rate (l/min)	Lmax (mm)	L1 (mm)	L2 (mm)	L3 (mm)	
		Maximum continuous	Maximum intermittent	Maximum continuous	Minimum startup							All shafts except PTO	PTO shaft
160	161.1	625	780	470	340	26.5	200	100	190	16.5	140	82	102
200	201.4	625	750	590	430	33.5	200	125	195	21.5	145	82	102
250	251.8	500	600	730	530	33.5	200	125	201	27.8	151	82	102
315	326.3	380	460	950	740	33.5	200	125	211	37	161	82	102
400	410.9	305	365	1080	840	30	180	125	221	47.5	171	82	102
500	532.6	240	285	1220	950	26.5	160	125	235	61.5	185	82	102

Pressure relief valve See page 115

Coding

M	H	T	2	0	0	A	5

Displacement code
See table

Type of shaft	
A5	Cylindrical shaft Ø40 mm, parallel key A12x8x70 according to DIN 6885
C3	Splined shaft according to ANS B92.1 - 1970 with flat base, side adjustment, size 12/24, 17 teeth. External Ø 1"1/2. Pressure angle 30°.
K2	Taper shaft Ø45 mm (ISO R775)
C4	PTO shaft (DIN 9611 class 1)

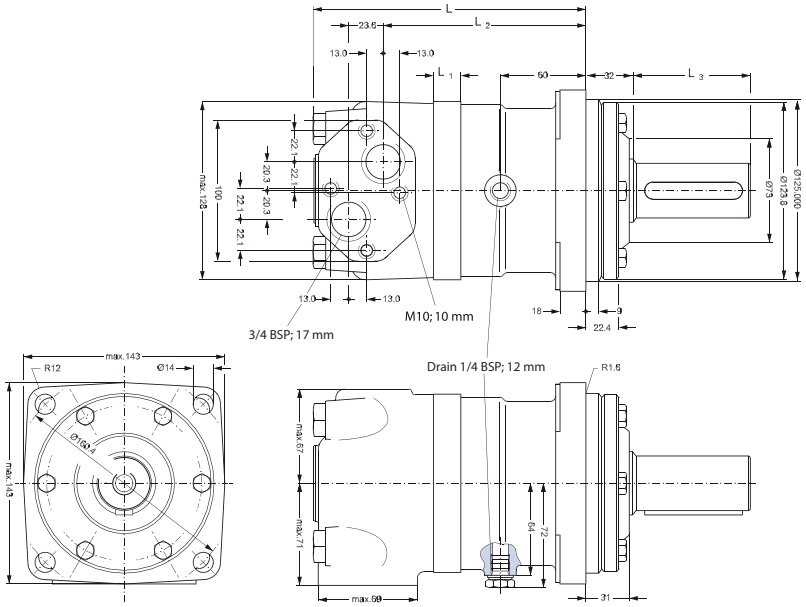

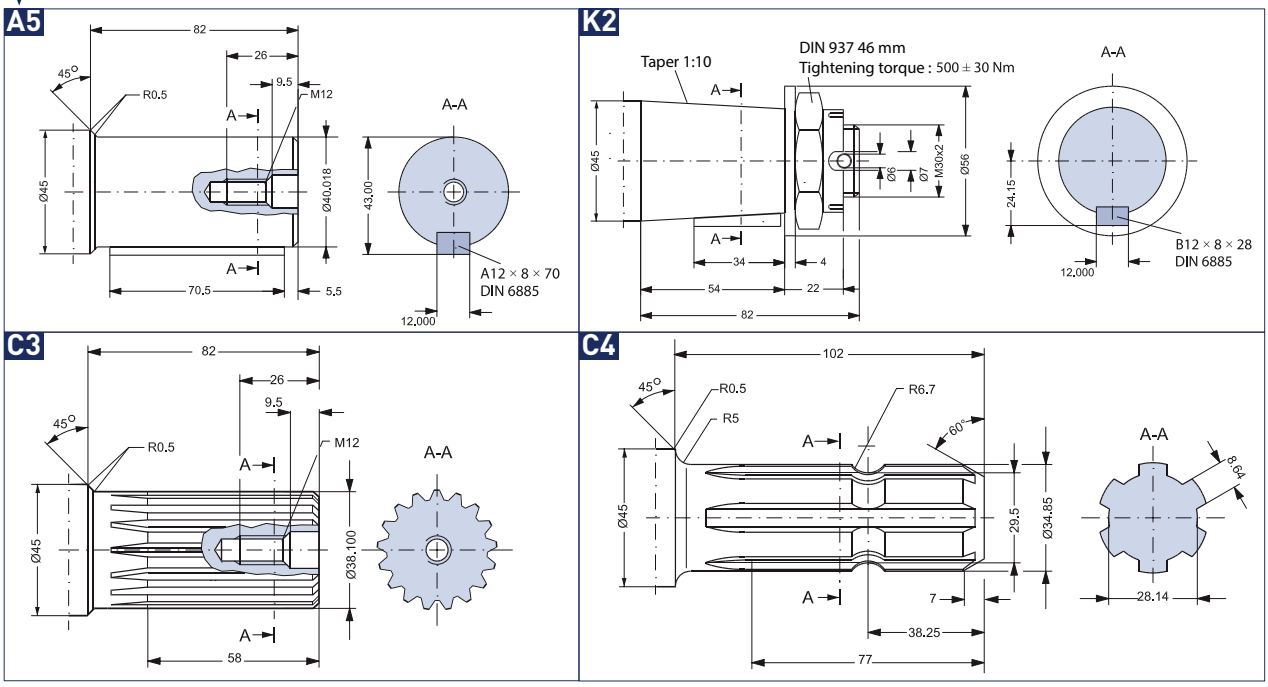

SLEEVES & ACCESSORIES

Type	Cylindrical shaft diameter	PTO shaft diameter	Length (mm)	Item	Reference
PTO sleeve	25 mm	1" 3/8 male	150 mm	1	**71110026**
	32 mm	1" 3/8 male	140 mm	2	**71110028**
	25 mm	1" 3/8 female	130 mm	3	**AM12613**
Coupling	25 mm	25 mm female	75 mm	4	**71110024**
	32 mm	32 mm female	120 mm	4	**71110128**
Mounting bracket for OMP - OMR motor				5	**71010138**
				6	**71010205**

SEAL KIT

Type of motor	Series	Reference
OML	0	**151G2201**
OMM	3	**151G0202**
OMP cyl. shaft Ø25, cyl. shaft 1", 6-tooth splined shaft	6.7	**PJMHP**
OMP cyl. shaft Ø25, cyl. shaft 1", 6-tooth splined shaft	8	**PA6090004**
OMP cyl. shaft Ø25, cyl. shaft 1", 6-tooth splined shaft	4.5	**PJMHR**
OMP cyl. shaft Ø32 mm	4, 5	**1511166**
OMP cyl. shaft Ø25, cyl. shaft 1", 6-tooth splined shaft	6	**PA6090004**
OMS cyl. shaft Ø32 mm, splined shaft, taper shaft	2, 3	**151F0111**
OMS PTO shaft	2, 3	**PA60900020**
OMT	2	**151B0113**

Hydraulic PTO Contact us

Overcentre valves See page 155

Anti-shock Anti-cavitation See page 157

OPTIONS

Name	Specifications	Item	Reference
Motor front flange OML and OMM	2-hole front flange kit	1	**151G0211**
Brake for OMP and OMR 32 DAN/M	Quantity of oil in horizontal position: 0.05 l Quantity of oil in vertical position: 0.1 l Viscosity: ISO VG32 Static torque: 32 daN.m Min. opening pressure: 16 bar Maximum pressure: 300 bar Oil capacity for aperture of 3 to 4 cm³	2	**FMHP32A1**

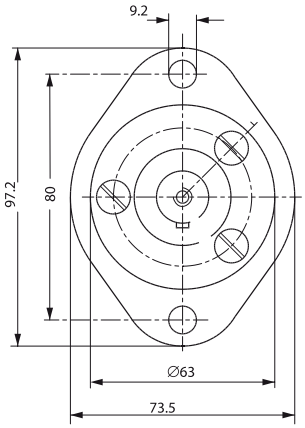

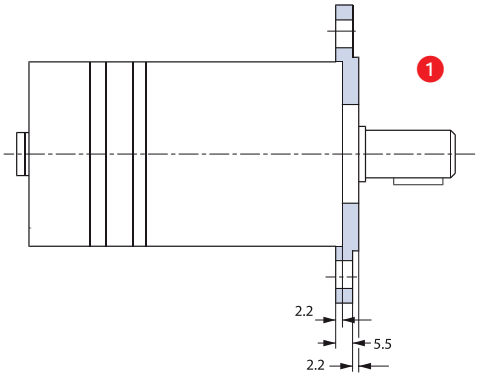

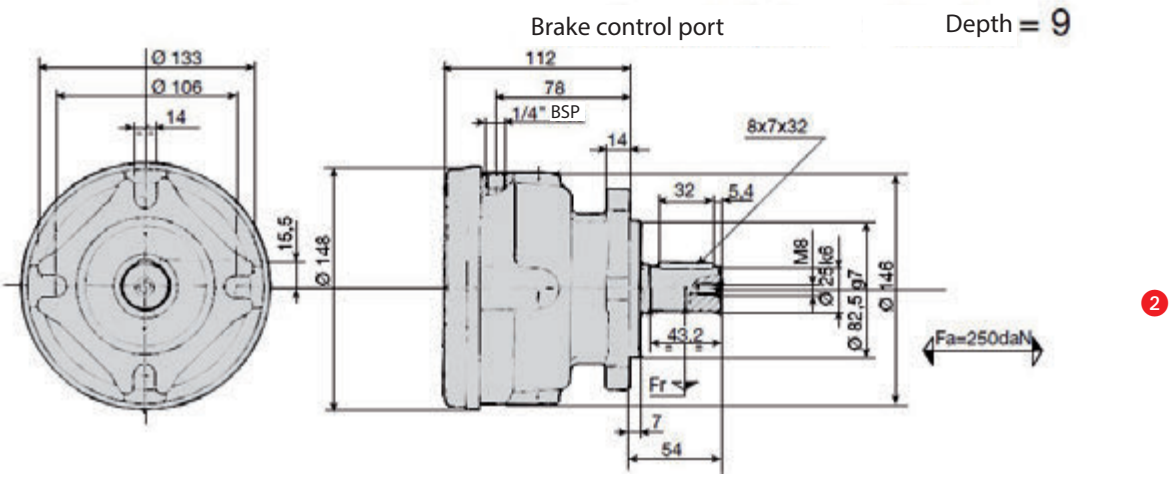

HYDROKIT MEDIUM-SPEED MOTORS

- Alternative choice of medium speed motor in place of premium brand.
- Practical, motor ready for use (motor tested and run-in).
- Excellent value for money.

MHP range

Displ. code	Displ. (cm³/rev)	Rotation speed (rpm)		Torque (N.m)		Max. continuous pressure drop (bar)	Maximum continuous power (kW)	Max. continuous oil flow rate (l/min)	L (mm)	Ø W (mm)	Reference
		Maximum continuous	Maximum intermittent	Maximum continuous	Maximum intermittent						
050	49,5	1210	1515	9,4	11,9	140	10,1	60	135,5	91	**MHP050A1AF**
080	79,2	755	945	15,1	19,5	140	10,2	60	139,5	91	**MHP080A1AF**
100	99	605	755	19,3	23,7	140	10,5	60	142,0	91	**MHP100A1AF**
125	123,8	486	605	23,7	29,8	140	10	60	145,5	91	**MHP125A1AF**
160	158,7	378	472	31,3	37,8	140	10,1	60	150,0	91	**MHP160A1AF**
200	198	303	378	36,6	45,6	140	10	60	155,5	91	**MHP200A1AF**
250	247,5	242	303	38	58,3	110	7,5	60	162,0	91	**MHP250A1AF**
315	316,8	190	236	38	56	90	5,7	60	171,5	91	**MHP315A1AF**

MHR range

Displ. code	Displ. (cm³/rev)	Rotation speed (rpm)		Torque (N.m)		Max. continuous pressure drop (bar)	Maximum continuous power (kW)	Max. continuous oil flow rate (l/min)	L (mm)	Ø W (mm)	Reference
		Maximum continuous	Maximum intermittent	Maximum continuous	Maximum intermittent						
050	51,5	775	970	10,1	13	140	7	40	138,0	105	**MHR050A1AF**
080	80,3	750	940	19,5	22	175	12,5	60	143,0	105	**MHR080A1AF**
100	99,8	600	750	24	28	175	13	60	146,0	105	**MHR100A1AF**
125	125,7	475	600	30	34	175	12,5	60	150,5	105	**MHR125A1AF**
160	159,6	375	470	39	43	175	11,5	60	156,5	105	**MHR160A1AF**
200	199,8	300	375	38,5	46	140	9	60	163,5	105	**MHR200A1AF**
250	250,1	240	300	39	58	110	6,5	60	172,0	105	**MHR250A1AF**
315	315,7	190	240	39	57	90	6	60	183,0	105	**MHR315A1AF**

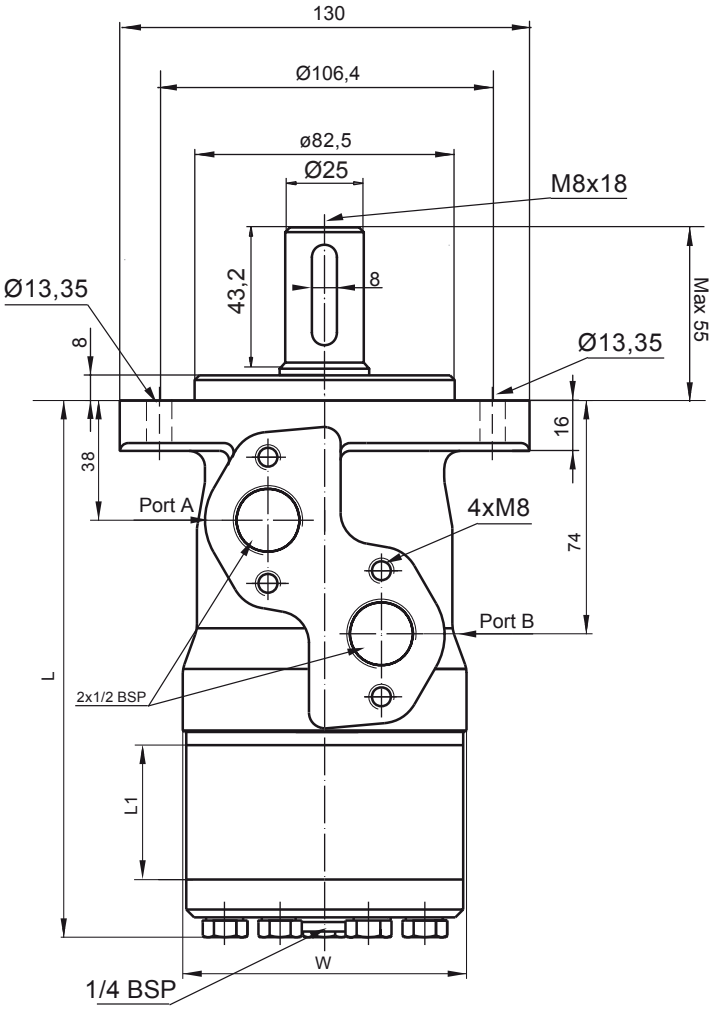

TORQUE AMPLIFIERS

Power-assisted steering on small vehicles.

- Easy to connect: only 2 hoses.
- Compact assembly: max length = 181 mm.
- Low pressure: 70 bar.
- Maximum speed: 100 rpm.
- Mounting P, T: 1/2 BSP, 15 mm depth with release
- Mounting A: 3/16" x 3/4" SAE J502.
- Mounting B: M10x1.5, 16 mm depth.

Max. flow rate (l/min)	Max input/ peak torque (daN.m)	Output torque at 70 bar (daN.m)	L_1 (mm)	L_2 (mm)	Reference
10	2/20	8	137	181	**TAD100**
16	2/20	12	145	189	**TAD160**

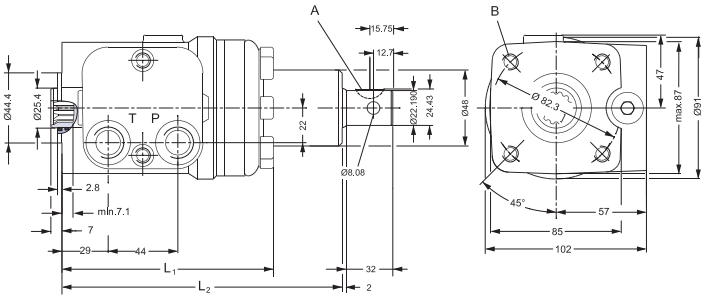

OSPB - OSPC STEERING UNITS

Coding

O	B	0	5	0	O	N	0	1	D

Increment

ON: Open centre non-reactive
OR: Open centre reactive
CN: Closed centre non-reactive
CR: Closed centre reactive
LA: Non-reactive flange-mounted load sensing valve
LB: Non-reactive in-line load sensing valve

Displacement (cm³/rev)

Spool valve type
OB: OSPB: Steering system without built-in valves
OC: OSPC: Steering system with built-in valves (pressure relief and shockproof valves)

Displacement (cm³/rev)	Recommended oil flow rate (l/min)	Maximum pressure at openings		
		P (bar)	T (bar)	L, R (bar)
040	4-18	140	40	280
050	5-18	140	40	280
060	6-18	140	40	280
070	7-18	175	40	280
080	8-30	175	40	280
100	10-30	175	40	280
125	13-50	210	40	280
160	16-50	210	40	280
185	19-50	210	40	280
200	20-50	210	40	280
230	23-50	210	40	280
250	25-50	210	40	280
315	32-70	210	40	280
400	40-70	210	40	280
500	50-70	210	40	280

Types

- Open centre: Open centre steering systems have an open connection between the pump and reservoir in the neutral position. Use fixed displacement pumps.
- Closed centre: Closed centre steering systems are blocked at the P opening in the neutral position. Variable oil flow is required.
- Reactive: In reactive-type steering systems, every external force exerted on the driving wheels causes the steering wheel to move in the same way, to the neutral position.
- Non-reactive: In non-reactive-type steering systems, external forces do not cause any steering wheel movement, to the neutral position.
- Load Sensing LA: Load sensing steering system for an inline-mounted priority valve.
- Load Sensing LB: Load sensing steering system for a flange-mounted priority valve.

OSPB - OSPC STEERING UNITS (CONT.)

OSPB ON type

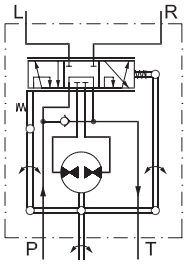

OSPC ON type

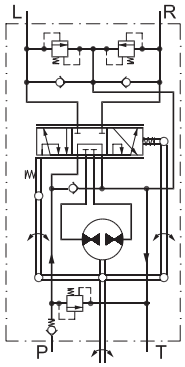

OSPC OR type

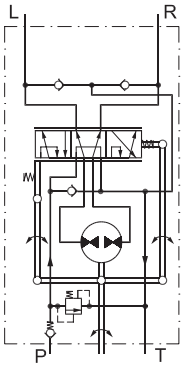

OSPC LA type

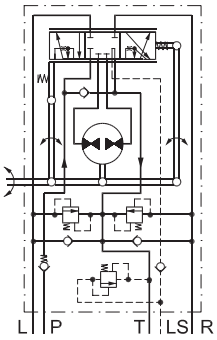

OSPC LB type

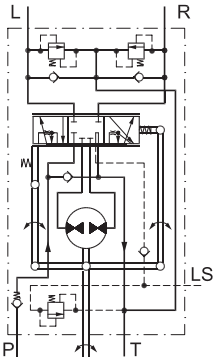

Displacement (cm^3/rev)	L_1 (mm)	L_2 (mm)
40	126	6.5
50	126	6.5
60	128	9.1
70	128	9.1
80	129	10.4
100	132	13
125	135	16.2
160	140	20.8
185	143	24
200	145	26
230	149	29.9
250	151	32.5
315	160	40.9
400	171	52
500	184	65

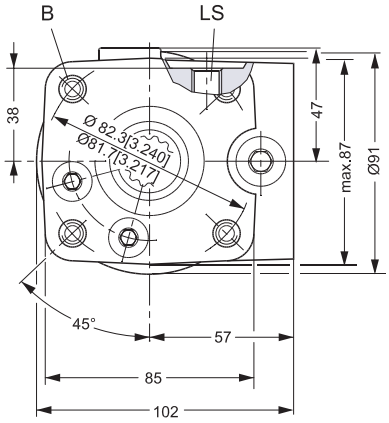

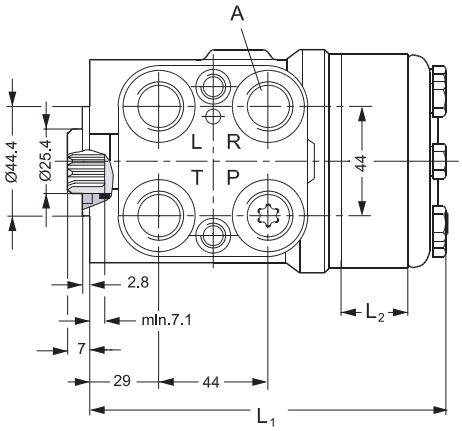

A	B	LS
1/2	M10 x 1.5	1/4
3/4 - 16 UNF	3/8 - 16 UNC	7/16 - 20 UNF
M18 x 150	M10 x 1.5	

Common references

HYDROKIT reference	Displacement (cm^3/rev)	Types	Pressure relief valve	Shockproof valve	Ports	Danfoss ref.
OSPB50ON	50	open non-reactive	x	x	3/4 16 UNF	**150-0025**
OSPB80ON	80	open non-reactive	x	x	3/4 16 UNF	**150-0026**
OSPB80ON1	80	open non-reactive	x	x	1/2 BSP	**150-0040**
OSPB100ON	100	open non-reactive	x	x	3/4 16 UNF	**150-0027**
OSPB100ON1	100	open non-reactive	x	x	1/2 BSP	**150-0041**
OSPB160CN	160	closed non-reactive	x	x	3/4 16 UNF	**150-0128**
OSPB160ON	160	open non-reactive	x	x	3/4 16 UNF	**150-0028**
OSPB160ON1	160	open non-reactive	x	x	1/2 BSP	**150-0043**
OSPB200ON	200	open non-reactive	x	x	3/4 16 UNF	**150-0029**
OSPB200ON1	200	open non-reactive	x	x	1/2 BSP	**150-0044**
OSPB315ON	315	open non-reactive	x	x	3/4 16 UNF	**150-0030**
OSPB315ON1	315	open non-reactive	x	x	1/2 BSP	**150-0045**
OSPC50ON	50	open non-reactive	90	150	1/2 BSP	**150-1149**
OSPC80OR	80	open reactive	100	x	M18X150	**150N1008**
OSPC80ON	80	open non-reactive	90	150	1/2 BSP	**150-1150**
OSPC80ON1	80	open non-reactive	150	205	M18X150	**150N1209**
OSPC100ON	100	open non-reactive	140	200	1/2 BSP	**150-1155**
OSPC100ON8	100	open non-reactive	150	205	M18X150	**150N1210**
OC100ON03D	100	open non-reactive	120	175	M18X150	**150N2005**
OSPC125ON1	125	open non-reactive	150	205	M18X150	**150N1211**
OSPC160ON1	160	open non-reactive	125	180	1/2 BSP	**150N1282**
OSPC160ON5	160	open non-reactive	145	200	M18X150	**150N1180**
OC160OR01D	160	open reactive	165	x	M22 and M18x150	**150N1193**
OSPC200ON1	200	open non-reactive	140	220	M18X150	**150-1057**
OSPC80LSA	80	flange-mounted LS valve	140	200	1/2 BSP	**150-1183**
OSPC80LSB	80	inline-mounted LS valve	170	225	1/2 BSP	**150-1230**
OSPC100LSA	100	flange-mounted LS valve	90	50	1/2 BSP	**150-1181**
OSPC100LSB	100	inline-mounted LS valve	170	225	1/2	**150-1231**
OSPC200LSB	200	inline-mounted LS valve	175	210	1/2	**150-1234**

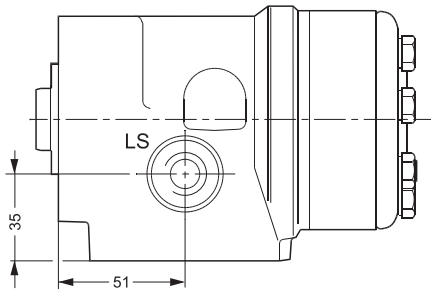

OSPC LB type for inline-mounted priority valve

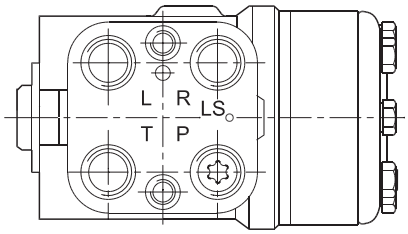

OSPC LA type for inline-mounted valve

SAFETY BLOCKS

- P, T, L and R: 1/2".

Max. flow rate (l/min)	Max. pressure of pressure relief valve (bar)	Maximum pressure of shockproof valve (bar)	Reference
80	90	150	**OVP15**
80	140	200	**OVP20**
80	90	-	**OVPR**

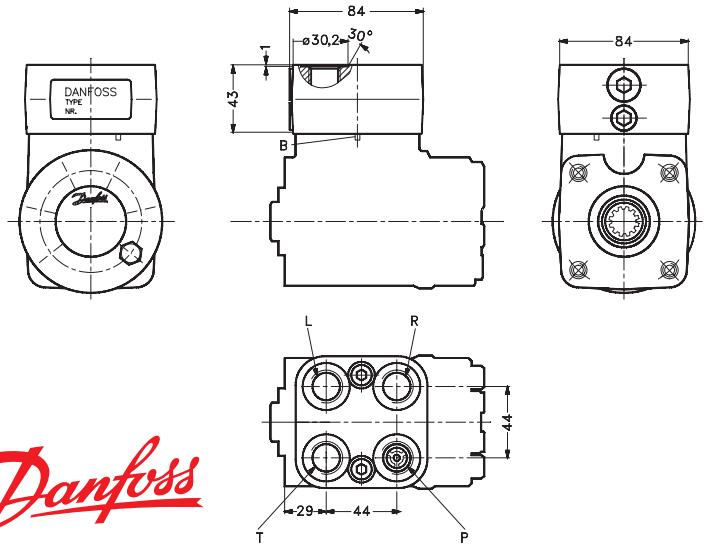

DIVIDER VALVES

Max. oil flow rate (l/min)	Opening pressure (bar)	Working pressure (bar)	Mountings	Reference
40	4	175	P, EF: 1/2" L, R, T: 3/8"	**OLSA40**
80	4	175		**OLSA80**
40	7	175	P, EF, CF: 1/2" LS: 1/4"	**OLSB40**
80	7	175		**OLSB80**

OLSA

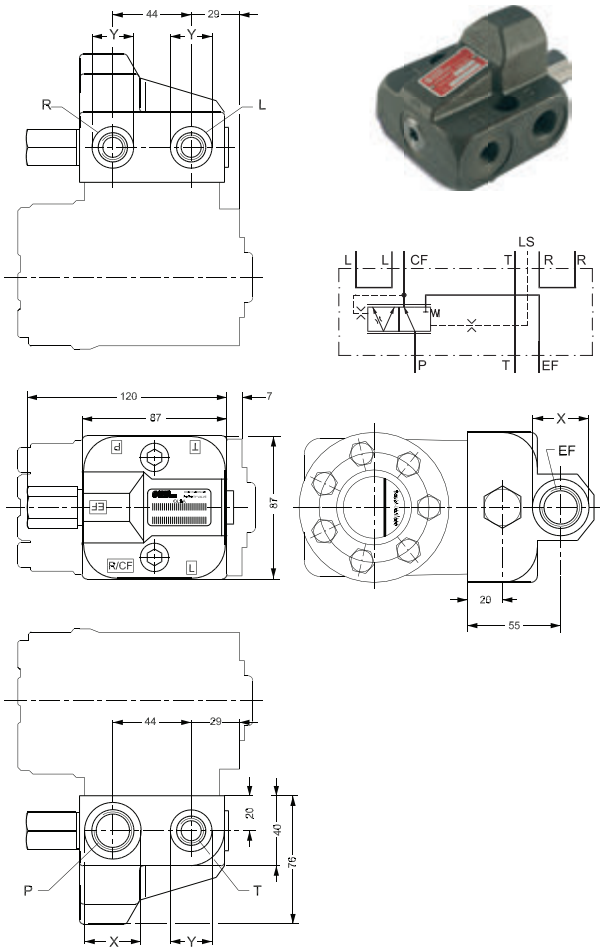

OLSB

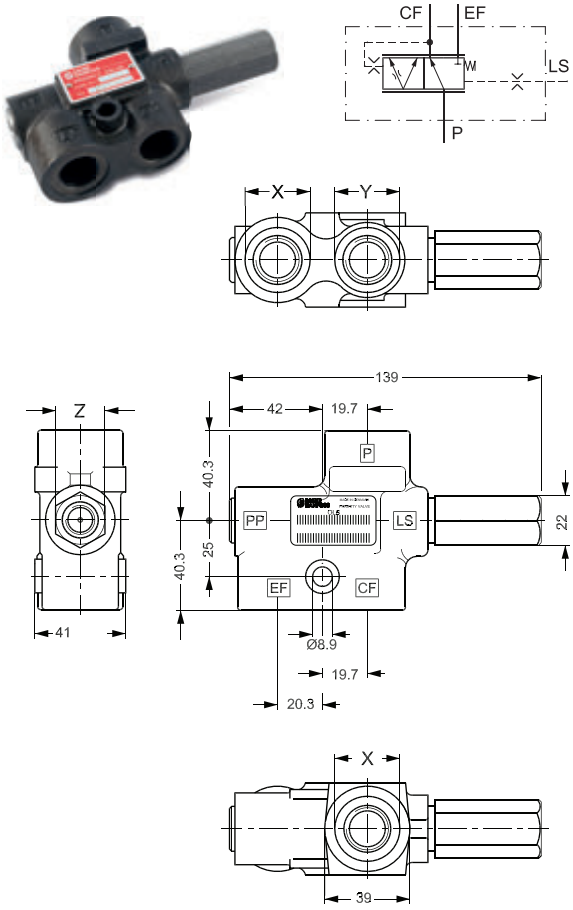

STEERING COLUMNS

Installation on Danfoss orbitrol steering unit.

B	Reference
75	CD075
166	CD150
199	CD200
269	CD270
299	CD300
349	CD350
399	CD400
449	CD450
519	CD520
549	CD550
602	CD600
669	CD670
775	CD750

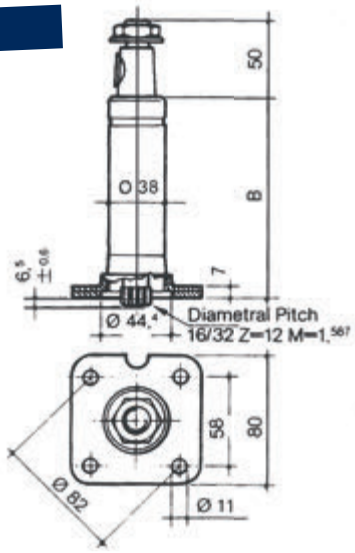

■ Adjustable column for ZF

Reference: PA78400001

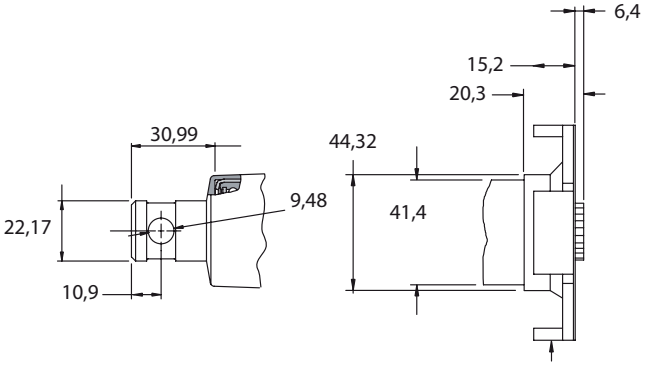

■ Weld-on sleeve

Reference: 1500674

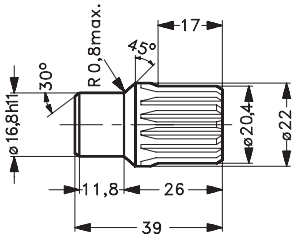

STEERING WHEELS

Installation on Danfoss steering column.

Name	Diameter (mm)	Height (mm)	Reference
Flat steering wheel	400	65	**918**
Deep dish steering wheel	360	115	**915**

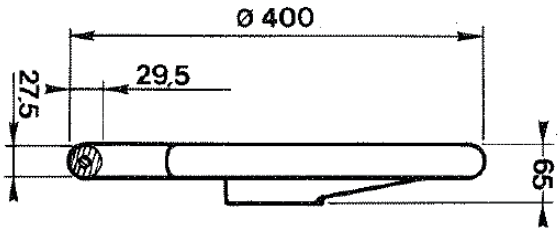

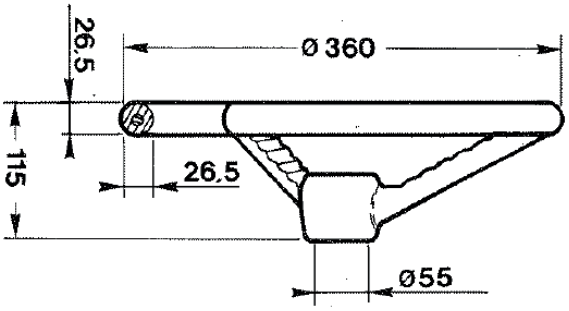

FLANGES FOR PUMPS

- Wide range of flanges for pumps: square DIN, Italian, ISO flanges, etc.

Pumps See from page 77

Motors See from page 169

	A diameter (mm)	B or C x D diameter	Reference	CHC screw	O-ring reference
DIN ELBOW 	3/8	30	BCC3030A38	2 M6X30 + 2 M6X45	JTBCC3030
	1/2	30	BCC3030A12	2 M6X30 + 2 M6X45	JTBCC3030
	1/2	35	BCC3535A12	2 M6X30 + 2 M6X45	JTBCC3535
	1/2	40	BCC4040A12	2 M6X30 + 2 M6X55	JTBCC4040
	3/4	40	BCC4040A34	2 M6X30 + 2 M6X55	JTBCC4040
	3/4	55	BCC5555A34	2 M8X45 + 2 M8X60	JTBCC5555
	1"	55	BCC5555A10	2 M8X45 + 2 M8X60	JTBCC5555
DIN STRAIGHT 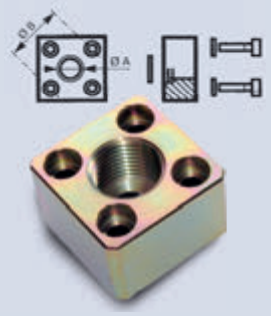	1/4	30	BDC3030A14	CHC6X15	JTBCC3030
	3/8	30	BDC3030A38	CHC6X15	JTBCC3030
	3/8	40	BDC4040F38	CHC6X30	JTBCC4040
	1/2	35	BDC3535F12	CHC6X30	JTBCC3535
	1/2	40	BDC4040FZ1	CHC6X30	JTBCC4040
	3/4	40	BDC4040F34	CHC6X30	JTBCC4040
	3/4	51	BDC5151F34	CHC10X30	JTBCC5151
ITALIAN STANDARD ELBOW 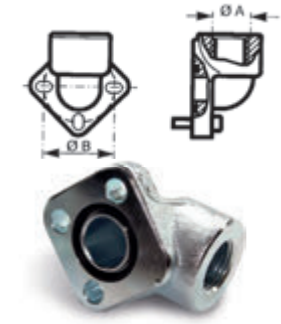	3/8	26	BCL2626F38	CHC5X20	JTBCL2626
	1/2	26	BCL2626F12	CHC5X20	JTBCL2626
	3/8	30	BCL3030F38	CHC6X20	JTBCL3030
	1/2	30	BCL3030F12	CHC6X20	JTBCL3030
	1/2	40	BCL4040F12	CHC8X25	JTBCL4040
	3/4	40	BCL4040F34	CHC8X25	JTBCL4040
	1"	51	BCL5151F10	CHC10X30	JTBCL5151
	1"	62	BCL6262F10	CHC12X35	JTBCL6262
ISO STRAIGHT 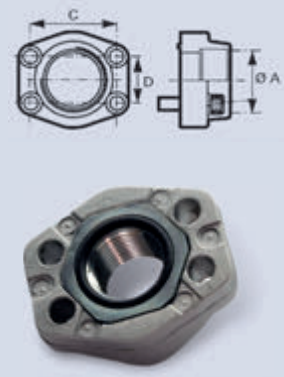	1/4	38 X 17.5	BDR3817A14	CHC6X20	JTBDR3817
	3/8	38 X 17.5	BDR3817A38	CHC6X20	JTBDR3817
	1/2	38 X 17.5	BDR3817A12	CHC6X20	JTBDR3817
	1/2	47.6 X 22.2	BDR4822A12	CHC6X25	JTBDR4822
	3/4	47.6 X 22.2	BDR4822A34	CHC6X25	JTBDR4822
	1"	47.6 X 22.2	BDR4822A10	CHC6X25	JTBDR4822
	3/4	52.2 X 26.2	BDR5226A34	CHC8X25	JTBDR5226
	1"	52.2 X 26.2	BDR5226A10	CHC8X25	JTBDR5226
	3/4	70 X 35.7	BDR7036A34	CHC8X25	JTBDR7036
	1"	70 X 35.7	BDR7036A11	CHC8X25	JTBDR7036

ISO-A PUSH/PULL COUPLERS

Specifications

- "A" series ISO7241-1 interchangeability.
- Mechanical connection: ball locking.
- Material: carbon steel.
- Surfacing: zinc plating.
- Springs: C72 steel.
- Balls: 100 C6 hardened steel.
- Valve: zinc plated hardened steel.
- Seals: standard in Nitrile: T° -20°C to +100°C.
- Anti-extrusion rings: Teflon.
- Viton or other seals available on request.
- Anti-dust plastic caps.

Stucchi®

Module	Nominal flow rate (l/min)	Recommended maximum flow rate (l/min)	Permissible working pressure (bar)
1/4"	12	12	350
3/8"	23	46	300
1/2"	45	90	250
3/4"	74	148	250
1"	100	200	230

Standard range

- Connection and disconnection under residual pressure is not permitted.
- Female couplers:

Module	Mounting A	C	E	F	I	Weight	Coupler reference	Cap reference
1/4"	Female 1/4"BSP	19	26	47.1	22	0.095	**CFCLP014AF014G**	**BMCLP014A • P**
3/8"	Female 3/8"BSP	22	31	56.1	24	0.144	**CFCLP038AF038G**	**BMCLP038A • P**
1/2"	Female 1/2"BSP	27	38	63.3	30	0.245	**CFCLP012AF012G**	**BMCLP012A • P**
3/4"	Female 3/4"BSP	38	48	82.2	44	0.494	**CFCLP034AF034G**	**BMCLP034A • P**
1"	Female 1"BSP	45	54	97.1	52	0.760	**CFCLP100AF100G**	**BMCLP100A • P**

- Male couplers:

Module	Mounting A	B	D	H	J	Weight	Coupler reference	Cap reference
1/4"	Female 1/4"BSP	19	32	20.8	11.8	0.031	**CMCLP014AF014G**	**BFCLP014A • P**
3/8"	Female 3/8"BSP	22	38	24	17.3	0.052	**CMCLP038AF038G**	**BFCLP038A • P**
1/2"	Female 1/2"BSP	27	44.5	29	20.5	0.084	**CMCLP012AF012G**	**BFCLP012A • P**
3/4"	Female 3/4"BSP	36	55	38.5	29.1	0.205	**CMCLP034AF034G**	**BFCLP034A • P**
1"	Female 1"BSP	41	63.1	44.8	34.3	0.275	**CMCLP100AF100G**	**BFCLP100A • P**

Replace the dot with the colour code:
R: Red; **B**: Blue; **N**: Black; **J**: Yellow; **V**: Green

Under pressure connection range

- Connection under residual pressure is permitted.
- Disconnection under residual pressure is not permitted.
- Compatible with standard range.
- Female couplers:

Module	Mounting A	C	E	F	I	Weight	Coupler reference	Cap reference
1/2"	Female 1/2"BSP	27	38	63.3	30	0.245	**CFCCP012AF012G**	**BMCLP012A • P**

- Male couplers:

Module	Mounting A	B	D	H	J	Weight	Coupler reference	Cap reference
1/2"	Female 1/2"BSP	27	44.5	29	20.5	0.084	**CMCCP012AF012G**	**BFCLP012A • P**

Replace the dot with the colour code:
R: Red; **B**: Blue; **N**: Black; **J**: Yellow; **V**: Green

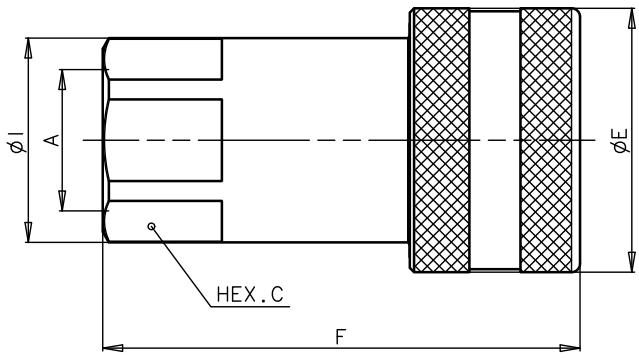

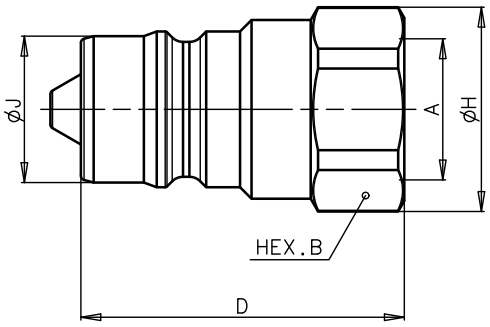

ISO-A PUSH/PULL COUPLERS (CONT.)

ISO-A range with DIN male output

- Connection and disconnection under residual pressure is not permitted.
- Female couplers:

Module	Mounting A	C	E	F	I	K	L	Weight	Coupler reference	Cap reference
1/2"	Male 12L	27	38	65.6	30	12.2	11	0.259	**CFCLP012AM12L**	**BMCLP012A • P**
1/2"	Male 15L	27	38	62.8	30	15.2	12	0.255	**CFCLP012AM15L**	**BMCLP012A • P**

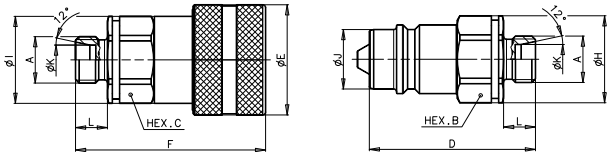

- Male couplers:

Module	Mounting A	B	D	H	J	K	L	Weight	Coupler reference	Cap reference
1/2"	Male 12L	27	57.3	30	20.5	12.2	11	0.115	**CMCLP012AM12L**	**BFCLP012A • P**
1/2"	Male 15L	27	54.5	30	20.5	15.2	12	0.114	**CMCLP012AM15L**	**BFCLP012A • P**

Replace the dot with the colour code:
R: Red; **B**: Blue; **N**: Black; **J**: Yellow; **V**: Green

Stucchi®

ISO-A range with DIN male elbow connector

- Connection and disconnection under residual pressure is not permitted.
- Female couplers:

Module	Mounting A	C	E	F	I	K	L	Weight	Coupler reference	Cap reference
1/2"	Male 12L	27	38	80.4	30	12.2	26	0.265	**CFCLP012AMC12L**	**BMCLP012A • P**
1/2"	Male 15L	27	38	77.8	30	15.2	27	0.260	**CFCLP012AMC15L**	**BMCLP012A • P**

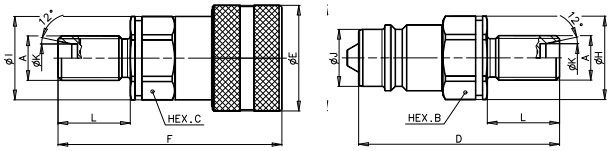

- Male couplers:

Module	Mounting A	B	D	H	J	K	L	Weight	Coupler reference	Cap reference
1/2"	Male 12L	27	72.3	30	20.5	12.2	26	0.123	**CMCLP012AMC12L**	**BFCLP012A • P**
1/2"	Male 15L	27	69.5	30	20.5	15.2	27	0.120	**CMCLP012AMC15L**	**BFCLP012A • P**

Replace the dot with the colour code:
R: Red; **B**: Blue; **N**: Black; **J**: Yellow; **V**: Green

SPECIAL TRACTOR COUPLERS

Ø	Reference	Brand
1/2 BSP F	**CFCAT012AF012G**	SDF
3/4 UNF F	**CFCAT012AF034S**	Landini
22*150 M	**CFCAT012AM2215I**	Case, Renault, JD, MF, NH, Claas 1

AGRICULTURAL SCREW-ON VALVES

Bore Ø (mm)	Reference				
	Complete	Fixed part (male G13)	Item	Trailer side (female 18 x 150)	Item
8	**VTR8A**	**VVT8A**	2	**VVR8A**	3

COUPLER KITS WITH SCREW-ON VALVES

Mounting	Reference			
	Male valve and coupler	Item	Female valve and coupler	Item
1/2	**VVT8CHM012**	4	**VVR8CHF012**	5

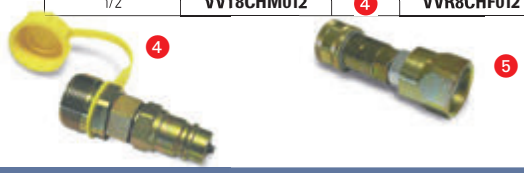

PUSH/PULL BRAKE VALVES

Bore Ø (mm)	Reference				
	Complete	Fixed part (male)	Item	Trailer side (female)	Item
8	**VF28**	**VF28FS**	6	**VF28MS**	7

OPTIONS

Parking cap for ISO A 1/2" BSP push/pull coupler

Black: BFPAR012ANP
Red: BFPAR012ARP

Specifications

- Sheet mounting.
- Drill a Ø18 mm hole.
- Max. thickness: 6 mm.

HIGH-PRESSURE COUPLERS

Specifications

- High-pressure applications.
- Can be interchanged with similar couplers.
- Mechanical connection: nut locking.
- Material: carbon steel.
- Surfacing: zinc plating.
- Springs: C72 steel.
- Balls: 100 C6 hardened steel.
- Seals: Nitrile.
- Anti-extrusion rings: Teflon.
- Anti-dust plastic caps.
- Connection and disconnection under residual pressure is not permitted

Module	Recommended maximum flow rate (l/min)	Permissible working pressure (bar)
1/4"	12	**700**
3/8"	23	**700**

- Female couplers:

Module	Mounting A	C	E	F	I	Weight	Coupler reference	Cap reference
1/4"	Male 1/4" NPT	22	28	60.8	24.5	0.138	**CFBIV014KM014B**	**BMBIV014KAA**
3/8"	Male 3/8" NPT	24	35	72.2	26.5	0.223	**CFBIV038KM038B**	**BMBIV038KAA**

- Male couplers:

Module	Mounting A	B	D	H	J	Weight	Coupler reference	Cap reference
1/4"	Female 1/4" NPT	19	32.5	28	15.8	0.074	**CMBIV014KF014B**	**BFBIV014KAA**
3/8"	Female 3/8" NPT	32	40	35	19	0.140	**CMBIV038KF038B**	**BFBIV038KAA**

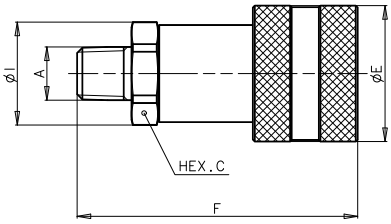

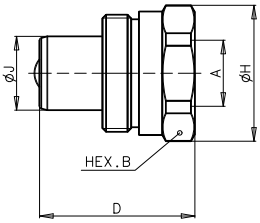

Stucchi®

SCREW-ON COUPLERS

Specifications

- Mechanical connection: screw-on system.
- Material: carbon steel.
- Surfacing: CrIII zinc plating.
- Valve: zinc plated hardened steel.
- Seals: standard in Nitrile: T° 20°C to +100°C.
- Anti-extrusion rings: Teflon.
- Viton or other seals available on request.
- Anti-dust plastic cap.
- If connected under residual pressure, the couplers must be screwed on with two wrenches to prevent the internal parts from rotating.

Module	Nominal flow rate* (l/min)	Recommended maximum flow rate (l/min)	Maximum permissible working pressure (bar)
1/4"	12	24	**450**
3/8"	23	46	**450**
1/2"	45	90	**400**
3/4"	74	148	**400**
1"	100	200	**300**
1"1/4	189	378	**300**

- Female couplers:

Module	Mounting A	B	E	F	H	M	Q	Coupler reference	Cap reference
1/4"	Female 1/4" BSP	19	M24x2	62	21	23.8	22	**CFCLV014HF014G**	**BMCLV014HRP**
3/8"	Female 3/8" BSP	22	M28x2	67.3	24	27.8	24	**CFCLV038HF038G**	**BMCLV038HRP**
1/2"	Female 1/2" BSP	30	M36x2	73	32	35.8	30	**CFCLV012HF012G**	**BMCLV012HRP**
3/4"	Female 3/4" BSP	36	M42x2	85.4	40	41.8	36	**CFCLV034HF034G**	**BMCLV034HRP**
1"	Female 1" BSP	41	48x3	101	45	47.8	41	**CFCLV100HF100G**	**BMCLV100HRP**
1"1/4	Female 1"1/4 BSP	55	70x3	117.2	61	68.5	65	**CFCLV114HF114G**	**BMCLV114HRP**

Male couplers:

Module	Mounting A	B	D	H	N	P	Coupler reference	Cap reference
1/4"	Female 1/4" BSP	19	58.6	21	30	27	**CMCLV014HF014G**	**BFCLV014HRP**
3/8"	Female 3/8" BSP	22	64.7	24	34	30	**CMCLV038HF014G**	**BFCLV038HRP**
1/2"	Female 1/2" BSP	30	67.3	32	42	36	**CMCLV012HF012G**	**BFCLV012HRP**
3/4"	Female 3/4" BSP	36	75.9	40	48	41	**CMCLV034HF034G**	**BFCLV034HRP**
1"	Female 1" BSP	41	84.5	45	55	50	**CMCLV100HF100G**	**BFCLV100HRP**
1"1/4	Female 1"1/4 BSP	55	121	61	85 CH80	80	**CMCLV114HF114G**	**BFCLV114HRP**

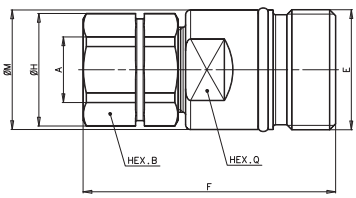

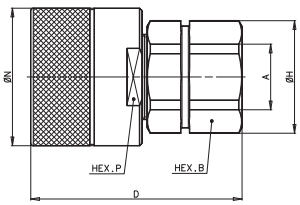

Stucchi®

STANDARD FLAT-FACE COUPLERS

Specifications

- ISO 16028 interchangeability.
- Mechanical connection: ball locking.
- Material: high-resistance carbon steel.
- Surfacing: CrIII zinc plating.
- External springs: AISI 302.
- Internal springs: C72 steel.
- Balls: 100 C6 hardened steel.
- Valve: hardened steel.
- Seals: standard in Nitrile: T° -20°C to +100°C.
- Anti-extrusion rings: Teflon.
- Viton or other seals available on request.
- Anti-dust plastic cap.

Standard range

- Connection under residual pressure: not permitted.
- Disconnection under residual pressure: not permitted.
- Female couplers:

Mod.	Mount. A	Nominal flow rate (l/min)	Recom. max. flow rate (l/min)	Perm. working pressure (bar)	C	E	F	I	Coupler reference	Cap reference
1/4	1/4	12	24	300	22	28	48.1	23.8	**CFFPP014CF014G**	**BMFPP014CRP**
3/8	3/8	23	46	300	27	32	64.2	29	**CFFPP038CF038G**	**BMFPP038CRP**
3/8	1/2	23	46	300	27	32	69.2	29	**CFFPP038CF012G**	**BMFPP038CRP**
1/2	1/2	45	90	250	32	38	73.8	33.8	**CFFPP012CF012G**	**BMFPP012CRP**
1/2	3/4	45	90	250	36	38	80.8	38.5	**CFFPP012CF034G**	**BMFPP012CRP**
5/8	3/4	74	148	250	36	42	78.5	38.5	**CFFPP058CF034G**	**BMFPP058CRP**
3/4	3/4	100	170	330	41	48	88.7	44.8	**CFFPP034CF034G**	**BMFPP034CRP**
3/4	1"	100	200	250	45	48	93.2	47.8	**CFFPP034CF100G**	**BMFPP034CRP**
1"	1"	189	378	300	55	55	104.8	59.8	**CFFPP100CF100G**	**BMFPP100CRP**
1"	1"1/4	189	378	250	55	55	106	59.8	**CFFPP100CF114G**	**BMFPP100CRP**
1"1/4	1"1/4	225	450	300	55	65	125.1	65	**CFFPP114CF114G**	**BMFPP114CRP**

- Male couplers:

Mod.	Mount. A	Nominal flow rate (l/min)	Recom. max. flow rate (l/min)	Perm. working pressure (bar)	B	D	H	J	Coupler reference	Cap reference
1/4	1/4	12	24	300	22	47.9	23.8	16.1	**CMFPP014CF014G**	**BFFPP014CRP**
3/8	3/8	23	46	300	24	60	26	19.7	**CMFPP038CF038G**	**BFFPP038CRP**
3/8	1/2	23	46	300	27	62.5	29	19.7	**CMFPP038CF012G**	**BFFPP038CRP**
1/2	1/2	45	90	250	32	68	33.8	24.5	**CMFPP012CF012G**	**BFFPP012CRP**
1/2	3/4	45	90	250	36	70.5	38.5	24.5	**CMFPP012CF034G**	**BFFPP012CRP**
5/8	3/4	74	148	250	36	70.5	38.5	27	**CMFPP058CF034G**	**BFFPP058CRP**
3/4	3/4	100	170	330	41	82.3	44.8	30	**CMFPP034CF034G**	**BFFPP034CRP**
3/4	1"	100	200	250	45	82.3	47.8	30	**CMFPP034CF100G**	**BFFPP034CRP**
1"	1"	189	378	300	55	96.8	59.8	36	**CMFPP100CF100G**	**BFFPP100CRP**
1"	1"1/4	189	378	250	55	89.8	59.8	36	**CMFPP100CF114G**	**BFFPP100CRP**
1"1/4	1"1/4	225	450	300	55	105	59.8	44	**CMFPP114CF114G**	**BFFPP114CRP**

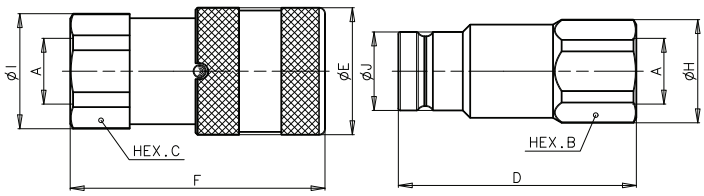

Under pressure connection range

- Connection under residual pressure: permitted.
- Disconnection under residual pressure: not permitted.
- Compatible with standard range references.
- Female couplers:

Mod.	Mount. A	Nominal flow rate (l/min)	Recom. max. flow rate (l/min)	Perm. working pressure (bar)	C	E	F	I	Coupler reference	Cap reference
3/8	3/8	23	46	350	30	32	64.8	32	**CFFCP038CF038G**	**BMFPP038CRP**
1/2	1/2	45	90	330	36	38	76.8	40	**CFFCP012CF012G**	**BMFPP012CRP**

- Male couplers:

Mod.	Mount. A	Nominal flow rate (l/min)	Recom. max. flow rate (l/min)	Perm. working pressure (bar)	B	D	H	J	Coupler reference	Cap reference
3/8	3/8	23	46	350	27	80	29	19.7	**CMFCP038CF038G**	**BFFPP038CRP**
3/8	1/2	23	46	350	27	82.5	29	19.7	**CMFCP038CF012G**	**BFFPP038CRP**
1/2	1/2	45	90	330	36	91	38.5	24.5	**CMFCP012CF012G**	**BFFPP012CRP**
1/2	3/4	45	90	330	36	93.5	38.5	24.5	**CMFCP012CF034G**	**BFFPP012CRP**
5/8	3/4	74	148	330	36	95	38.5	27	**CMFCP058CF034G**	**BFFPP058CRP**
3/4	3/4	100	200	330	-	-	-	-	**CMFCP034CF034G**	**BFFPP034CRP**
3/4	1"	100	200	330	46	108.5	49.8	30	**CMFCP034CF100G**	**BFFPP034CRP**
1"	1"1/4	189	378	250	55	123.5	59.8	36	**CMFCP100CF114G**	**BFFPP100CRP**
1"1/4	1"1/4	225	450	300	-	-	-	-	**CMFCP114CF114G**	**BFFPP114CRP**

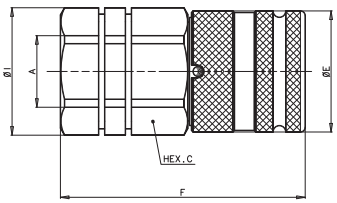

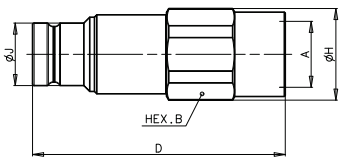

MULTI-COUPLERS WITH 2 TO 10 LINES

- Quick connection and disconnection of up to 10 hydraulic, electric or pneumatic lines without the risk of reversing the connections.
- Easy to clean flat-face couplers, reduce the risk of contaminating the circuit. No release of fluids that could pollute the environment.
- Possible to connect 6 or 7 pin electrical connectors in place of hydraulic connectors for an electrical control system on the equipment.
- Easy to install on the existing system.
- Possible to connect and disconnect under pressure (in the 2 circuits) up to 250 bar (depending on model).
- Coupler dimensions adapted to flow rates: 3/8" to 1" on the same plate.
- High-pressure resistance: up to 350 bar in operation.
- Reduces the risk of contaminating the circuit (flat-face couplers).
- High corrosion protection thanks to zinc nickel plating.

Stucchi®

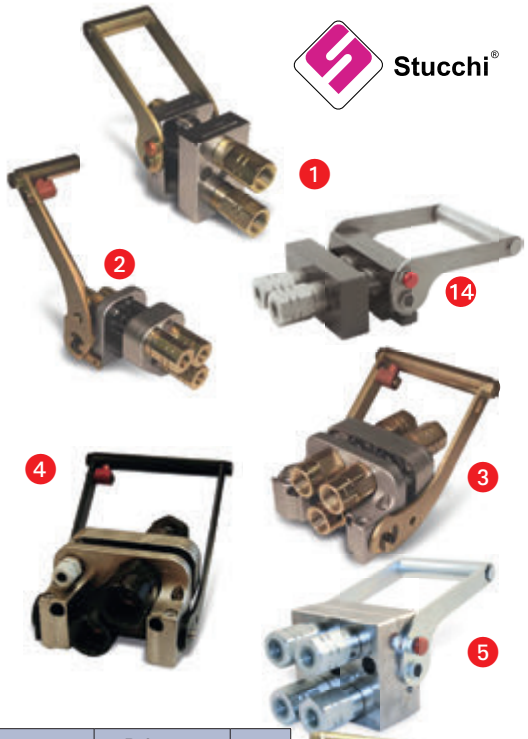

Coupler specifications

Module	Nominal flow rate (l/min)	Recommended maximum flow rate (l/min)	Permissible maximum working pressure (bar)
3/8"	23	46	350
1/2"	45	90	330
5/8"	74	148	330
3/4"	100	200	330
1"	189	378	300

Number of lines	Hydrokit series	Coupler module*	Stucchi brand	Number of couplers					Electric coupler possible (as standard)	Reference Complete male/female kit	Item
				3/8 module	1/2 module	5/8 module	3/4 module	1" module			
2	MCX02	038	DP2-9	2					-	MCX02038FABP	1
	MCX02	S01	DPT2	1	1				-	MCX02S01FZZP	1
	MCX02	012	DP2-13		2				-	MCX02012FACP	1
	MCX02L	012	DP2-13L		2				-	MCX02L12FACP	14
	MCX02	058	GRI4TB			2			2	MCX02058FBEZ	13
3	MCX03	038	GR3-9	3					1	MCX03038FABP	2
	MCX03	012	GR3-13		3				1	MCX03012FACP	3
	MCX03	S01	GRK3	1				2	1	MCX03S01FZZP	4
4	MCX04	038	DP4-9	4					-	MCX04038FABP	5
	MCX04	012	DP4-13		4				-	MCX04012FACP	5
	MCX04	S01	GRB4	2	2				2	MCX04S01FZZP	6
	MCX04	S02	GRI4TB	2		2			2	MCX04S02FZZP	
	MCX04	S03	GR4MR	2			1	1	2	MCX04S03FZZP	
5	MCX05	S01	GR5AA		2		3		-	MCX05S01FZZP	7
	MCX05	S02	GRD5	3			1	1	2	MCX05S02FZZP	8
	MCX05	S04	GRV5IF	4					1**	MCX05S04FABQ	
6	MCX06	038	GR6-9	6					2	MCX06038FABP	9
	MCX06	012	GR6-13		6				2	MCX06012FACP	10
	MCX06	S01	GR6AB		4		2		-	MCX06S01FZZP	11
7	MCX07	S01	GR7AB	4	3				4	MCX07S01FZZP	
8	MCX08	S01	GR8AB	6	2				6	MCX08S01FZZP	
10	MCX10	038	GR10-9	10					2	MCX10038FABP	12
	MCX10	012	GR10-13		10				2	MCX10012FACP	12

* S01 and S02 correspond to combined modules
** Line exclusively designed for an electrical connector

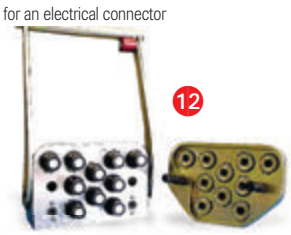

Special telehandler

› Multi-coupler catalogue available on request

Headquarters: +33 (0)2 51 34 10 10 / UK: +44 (0)1728 684 800

MULTI-COUPLERS

Applications

- The multi-couplers enable 2 to 7 hydraulic lines to be connected at the same time under pressure.
- Flow rate: 50 to 110 l/min
- Pressure: 250 to 350 bar.

Type	Coupler	Flow rate (l/min)	Pressure (bar)	Reference 2-way	Reference 3-way	Reference 4-way	Reference 5-way	Reference 6-way	Reference 7-way
Multifaster 1/2 port	Male	50	250	DCRM2012	-	1 DCRM4012	DCRM5012V1	DCRM6012	-
	Female	50	250	DCRF2012	-	2 DCRF4012	DCRF5012V1	DCRF6012	-
MACH Male 15L (22x150)	Male	50	250	3 DCRM2PMCFP	6 DCRM3PMCFP	DCRM4PMCFP	DCRM5PMC1	DCRM6PMC	8 DCRM7PMC
	Female	50	250	4 DCRF2PMCFP	5 DCRF3PMCFP	DCRF4PMCFP	DCRF5PMC1	DCRF6PMC	7 DCRF7PMC
MACH Male 3/4 BSP	Male	110	350	DCRM2HD	-	DCRM4HD	-	-	-
	Female	110	350	DCRF2HD	-	DCRF4HD	-	-	-
MACH Special MX	Male	50	250	-	-	DCRM4PMAI	-	-	-
	Female	50	250	-	-	DCRF4PMAI	-	-	-

Optional electrical connector: contact us

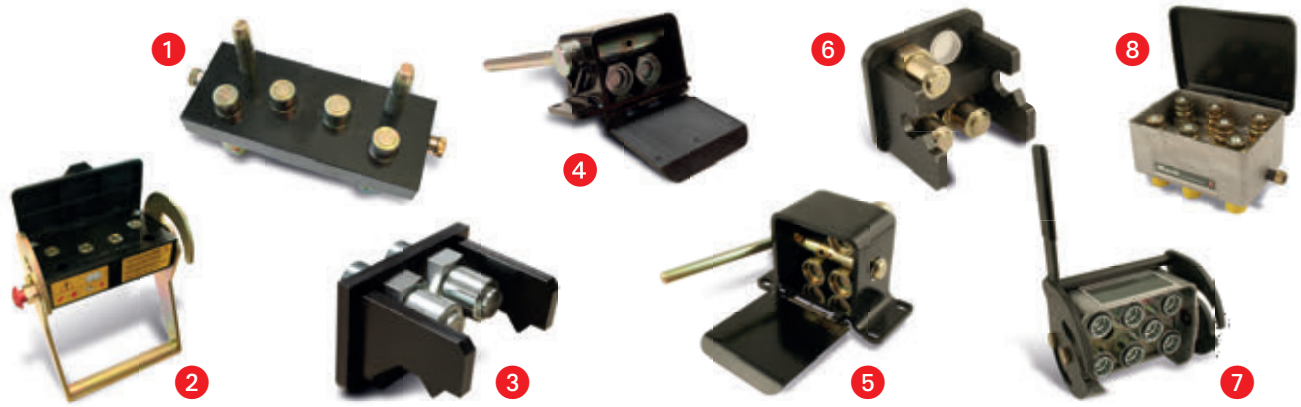

MULTI-COUPLER SOLUTIONS

Make	Type	Reference
JCB	Series 58/67/95	KC128D02V3
CLAAS	6030-7030 with hydraulic locking	KC061D15V4
	6030-7030 without hydraulic locking	KC061D15V3
MERLO	32.6, 28.8	KC139D01V2
	30.6, 34.7, 40.7	KC139D02V2
DIECI	40.7	KC114D01V1

- Connection under residual pressure is permitted.
- Reduce the risk of contamination and the release of polluting fluids (flat-face couplers).
- Easy to install on the existing system.
- Fixed plate compatible with standard ISO 16028 couplers.

For quick and easy connection and disconnection of up to 10 electric and/or hydraulic lines of the same (or different) sizes.

ELECTRICAL CYLINDERS
LA10 12/24 V DC RANGE, ACME SCREW

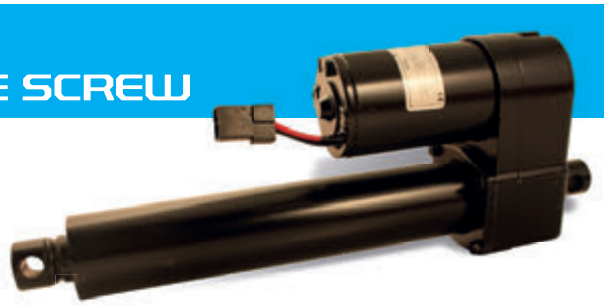

Specifications

- 12 or 24 V DC power input (36 V DC possible, contact us).
- Self-locking (acme screw) (optional ball screw with brake).
- Built-in torque limiter (1.5 x max. load).
- Motor with thermal protection.
- Stainless steel rod, steel tube and painted aluminium reducer.
- Duty ratio: 25%.
- Static load: 1135 daN (with ball screw: 1800 daN).
- IP65.

THOMSON™
Linear Motion. ***Optimized.***

Reference	Stroke (mm)	Closed distance (mm)	Load capacity (daN)	Speed without load (mm/s)	Max. speed with load (mm/s)	Max. voltage intensity (A) 12 V version	Max. voltage intensity (A) 24 V version
E21V•A10AT01	101.6	262.3	110	54	32	34	**17**
E21V•A15AT01	152.4	313.1	110	54	32	34	**17**
E21V•A20AT01	203.2	363.9	110	54	32	34	**17**
E21V•A30AT01	304.8	465.5	110	54	32	34	**17**
E21V•A45AT01	457.2	668.7	110	54	32	34	**17**
E21V•A60AT01	609.6	821.1	110	54	32	34	**17**
E21V•A10CT01	101.6	262.3	225	15	12	15	**7.5**
E21V•A15CT01	152.4	313.1	225	15	12	15	**7.5**
E21V•A20CT01	203.2	363.9	225	15	12	15	**7.5**
E21V•A30CT01	304.8	465.5	225	15	12	15	**7.5**
E21V•A45CT01	457.2	668.7	225	15	12	15	**7.5**
E21V•A60CT01	609.6	821.1	225	15	12	15	**7.5**

Replace dot with the letter corresponding to the required version:
A: 12 V, B: 24 V

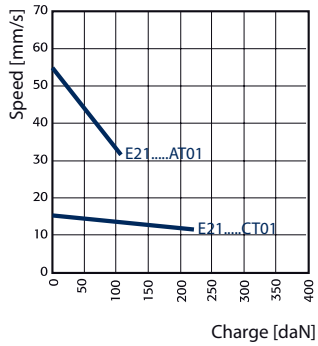

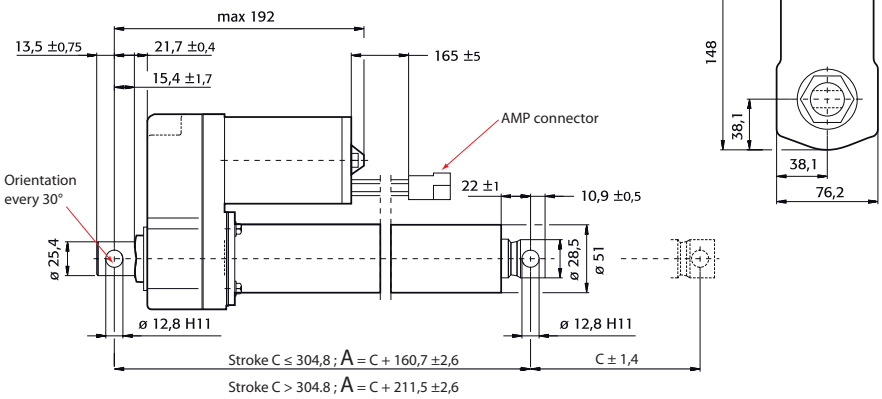

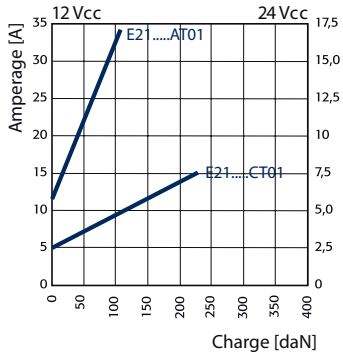

CONTROL BOX (ELECTRIC CYLINDER)

Name	Reference
Control box for 1 x 24V electric cylinder	**BVERINELE1**
Control box for 1 x 12V electric cylinder	**BVERINELEC**
Control box for 2 x 12V electric cylinders	**BVERINELE2**

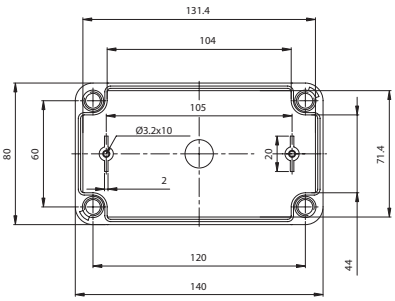

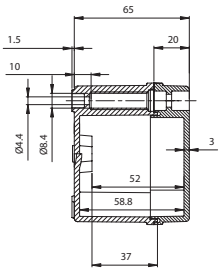

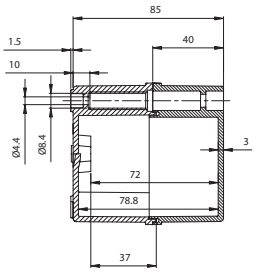

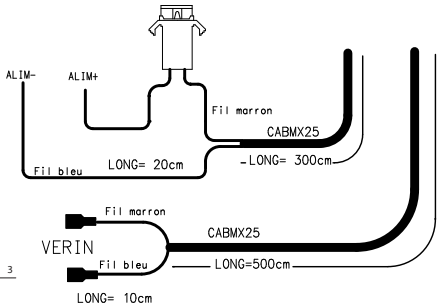

CONTROL BOX (FOR ELECTRIC SPOOL VALVES)

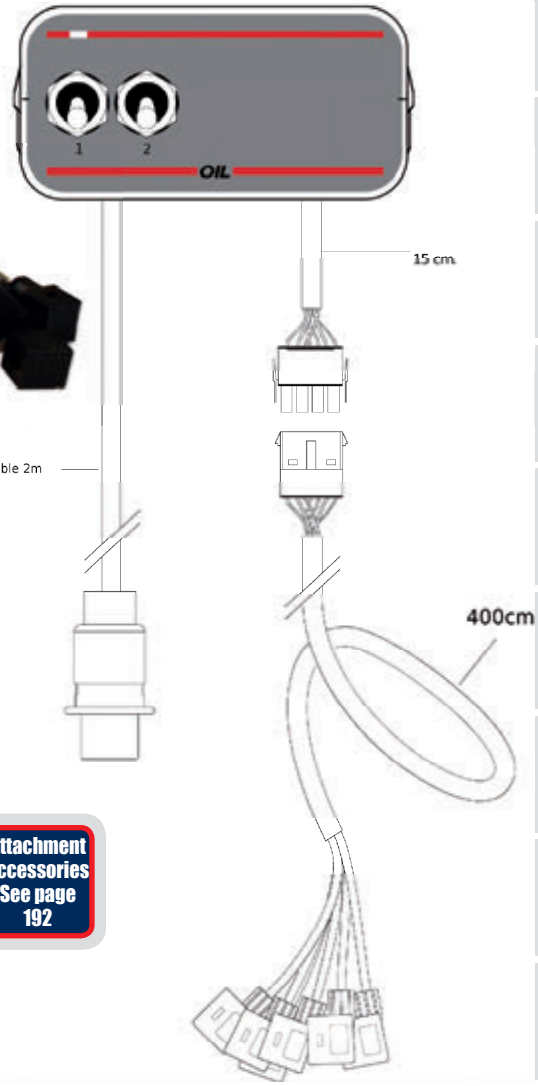

Specifications

- Toggle switch control.
- Robust.
- User-friendly.
- Possible to control by-pass for each function (single-acting/double-acting).
- Optional open or closed centre configuration.
- Has flow regulation control.
- Fuse accessible from the outside.

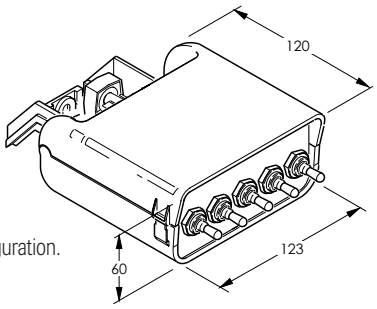

Number of double-acting functions	Reference 12 V and 24 V*
2	BEF251
3	BEF351
4	BEF451
5	BEF551
Optional 3 m extension cord	FS03BEF01
Open centre/Closed centre option	KE999COCF1

* Adaptable to 12 and 24 V.

Attachment accessories See page 192

SINGLE BOXES WITH OR WITHOUT FLOW REGULATION

Specifications

- Toggle switch control.
- Open or closed centre configuration.
- Loom length: 8 metres.
- 12 V DC or 24 V DC power supply.
- IP65.
- Protected by resettable fuse + reverse polarity protection.

Version without flow regulator

Number of double-acting functions	Reference
2	BF281
3	BF381
4	BF481
5	BF581
6	BF681
7	BF781

Version with flow regulator

Number of double-acting functions	Reference
2	BD281
3	BD381
4	BD481
5	BD581
6	BD681
7	BD781

CONTROL BOXES FOR FLOW DIVIDER

Box for motorised divider

- 12 to 24 V DC power supply.
- Loom: 8 m.
- 0-10 scaled potentiometer.

Reference: BDDA12V1

Flow dividers See page 107

COBRA HANDLE ACCESSORIES

Item	Reference
1	522150
2	522151
3	522152
4	522153

Toggle switch or push-button mounting
See page 198

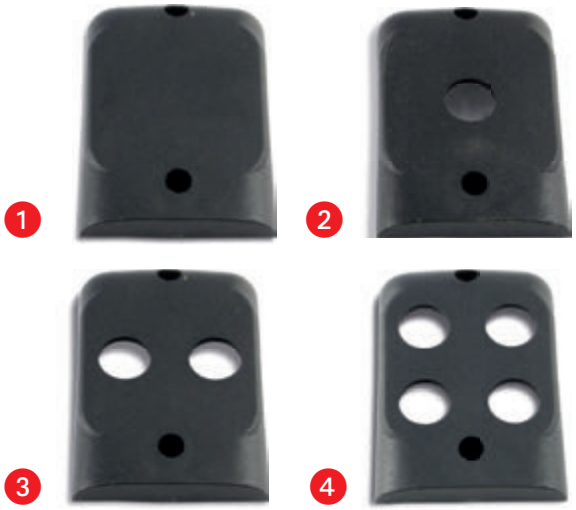

ERGOKIT HANDLES FOR CONTROLLING ELECTRIC SPOOL VALVES

Specifications

- Voltage: 12 or 24 V DC.
- Push-button control.

Dimensions
See page 193

- An integrated switch on the handle enables open or closed centre circuits.
- Complete loom supplied with bypass function plug.
- Ergonomic.
- Thread for mounting on distribution lever (M10 x 150).

Number of double-acting functions	Reference
2	PCED07A2
3	PCED07A3
4	PCED07A4
5	PCED07A5

COBRA HANDLES

Specifications

- 1 to 4 push-buttons (max. voltage intensity 4 A at 12 V).
- Thread 10 x 150.
- Supplied with gaiter (reference 52214).

Number of push-buttons	Wiring		Reference
	Loom	Power supply	
1	6 m	2 m	PCE06S1
2	6 m	2 m	PCE06S2
1	5 m	2 m	PCE05A1
2	5 m	2 m	PCE05A2
3	5 m	2 m	PCE05A3
4	5 m	2 m	PCE05A4

3-FUNCTION SELECTOR CONTROL BOXES

Advantages

- Easy to install, assembled kit.
- Excellent value for money.
- Compact box.

Specifications

- Up to 2 additional functions with a single spool valve.

ATTACHMENT ACCESSORIES

To attach your boxes...

- Swivel arm with suction pad, 80 mm diameter.

Reference: E15N80XART

- Diamond-shaped base with ball knob (standard).

Reference: E15ERAM001

- Suction pad 80 mm diameter with screw-on base.

Reference: E15N80X501

NON-WIRED COBRA HANDLES

- Standard kit with 1 to 4 push-buttons.

Number of push-buttons	Reference
1	PCE1
2	PCE2
3	PCE3
4	PCE4

ERGONOMIA ARMRESTS

Composition

- 1 black ABS armrest.
- 1 metal plate with 8 fastening screws.
- 1 switch-holder and 3 plugs.

Complete assembly reference: ERGNT00001

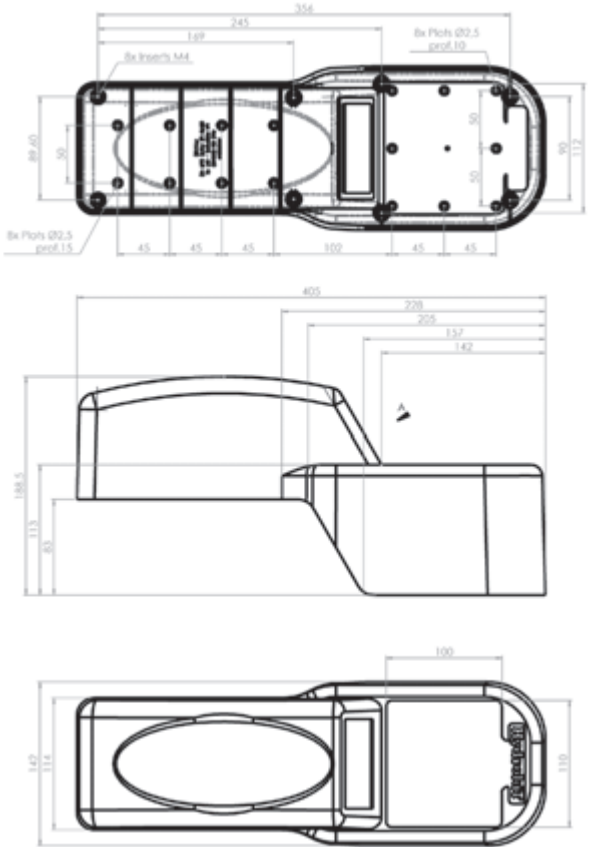

ERGOKIT HANDLES

Specifications

- 1 to 8 push-buttons (max. voltage intensity 4 A at 12 V).
- Biased rocker switch with spring, index or warning lights.
- Controls electric spool valves without relay.
- Thread M10x150.
- Material: ABS plastic, resistant to hydrocarbons and treated against UV damage.
- Supplied with rubber gaiter.
- Possible to customise the electric functions: hold down contact, inverters, switches, warning lights.

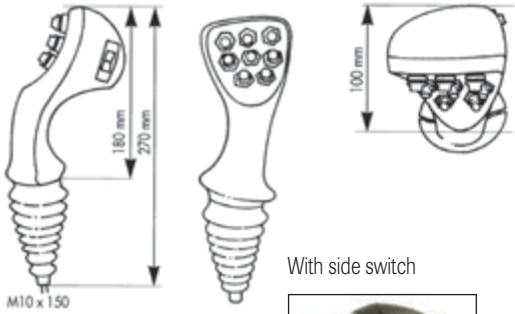

With side switch

Without side switch

Configuration examples (non-mounted handles supplied)		
Number of push-buttons (Voltage intensity 4 A at 12 V, 6.35 mm terminal)	Side switch with 3 spring return positions (6.35 mm terminal)	Reference
0	No	**PCED0N**
0	Yes	**PCED02**
4	No	**PCED4N**
4	Yes	**PCED42**
6	No	**PCED6N**
6	Yes	**PCED62**
8	No	**PCED8N**
8	Yes	**PCED82**

HANDLES

Type	Name	Voltage intensity	Fasteners	Item	Reference
Handle only	-	-	M12	1	**E01E00M003**
Handle with push-button	4 buttons	1.5 A	M12	2	**E01E04MC02**
Handle with push-button	6 buttons + 1 trigger	10 A in total	M10 x 150	3	**PCE6DB**
Handle with push-button + proportional roller	3 buttons + 2 triggers	50 mA	M12, M14X150, M14X175	4	**E01E07MC02**
Handle with push-button	3 buttons + 2 triggers	50 mA	M12, M14X150, M14X175	5	**E01E05MC05**
Handle with push-button	8 buttons + 1 trigger	40 mA	M12, M14X150, M14X175	6	**E01E09MC01**
Handle with push-button + FNR (reverser)	2 buttons + 2 triggers	50 mA	M12, M14X150, M14X175	7	**E01E04MC04**
Handle with push-button + FNR (reverser)	2 buttons + 2 triggers	50 mA	Ø12	8	**E01E05MC01**
Handle with push-button + FNR (reverser)	6 buttons	50 mA	M12, M14X150, M14X175	9	**E01E06MC04**

DANFOSS JOYSTICKS

PVREL type

- Connection to spade terminal.

Symbol	Description	Reference
	1 proportional function without neutral position switch	E03M100013
	1 proportional function with neutral position switch	E03M10N013
	1 proportional hold function without neutral position switch	E03M10B11
	1 proportional hold function with neutral position switch	E03M10NB12
	1 proportional function with neutral position lock without neutral position switch	E03M100B12
	1 proportional function with neutral position lock with neutral position switch	E03M10NB13

PVRES type

- Connection to male spade terminal or Sub-D connection cable.

Symbol	Description	Reference
	1 proportional function	E03M10N011
	1 proportional function + mechanical locking	E03M10NB11
	2 proportional functions	E03M20N011

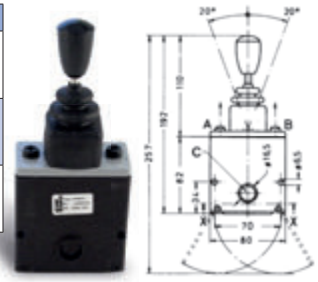

PROF1 type

- Cable connection.

Symbol	No. of proportional functions	No. of on-off buttons	Reference
	2	6	E03M26N011
	3	4	E03M34N011

PVRET type

- Connection with interface card or connection cable.

Symbol	Description	Reference
	3 proportional functions	E03M30N012

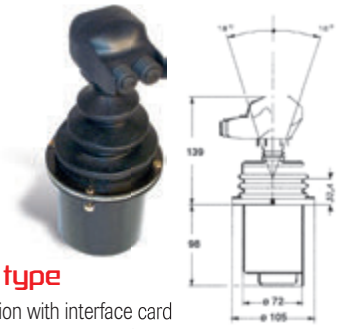

PVRE type

- Connection with interface card or Sub-D connection cable.

Symbol	Description	Reference
	1 proportional function	E03M10N012
	1 proportional function with 1 on-off switch	E03M12N011
	2 proportional functions	E03M20N012
	2 proportional functions with 1 on-off switch	E03M22N011
	3 proportional functions	E03M30N011

SUB-D CONNECTION CABLES

Specifications

- 25 coloured wires, black PVC, oil resistant.
- Female connector, 25 contacts, metallic guard.
- Can be used with PVRE, PROF1 and PVRET.

Reference: E28SUD4

INTERFACE CARD

Specifications

- Can be used with PVRE and PVRET.
- Connection to male terminals.
- Terminals marked on the card.

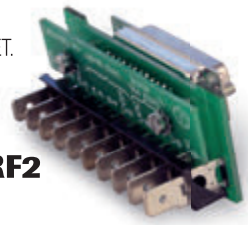

Reference: E20INTERF2

REPLACEMENT KITS

Name	Reference
Adapter ring + fastening screw	E03MA00001
Complete kit with ring and interface card	E20KD00001

HYDROKIT ON-OFF JOYSTICKS

Specifications

- Joystick tilts ±15° rotation on axis.
- Simultaneous control on 2 axes.
- Spring return to neutral.
- Functions are not notched.
- Functions activated at end of control lever movement.
- Normally open contact 10 A below 24 V DC.
- M12 thread (joystick only).
- Aluminium body Ø 70 on steel flange Ø 98.
- Interior passage for 12 mm Ø cable.

Other joysticks Contact us

- Performance optimisation: centralised electrical controls.
- Ergonomic: mounted on Ergonomia armrest or box.
- Practical: easily accessible contacts. Screw terminal connections.
- Easy to install and mount.
- Robust: joystick is tested with over 1,000,000 manoeuvres with a 30 kg force on lever, and is vibration-proof (recommended for work involving heavy duty and intensive use).

Description	Reference
4-direction joystick with Ergokit handle	E02BG104A1
4-direction joystick only	E02BG104A2
4-direction joystick with knob	E02BG104A3
4-direction joystick with knob + push-button	E02BG105A1

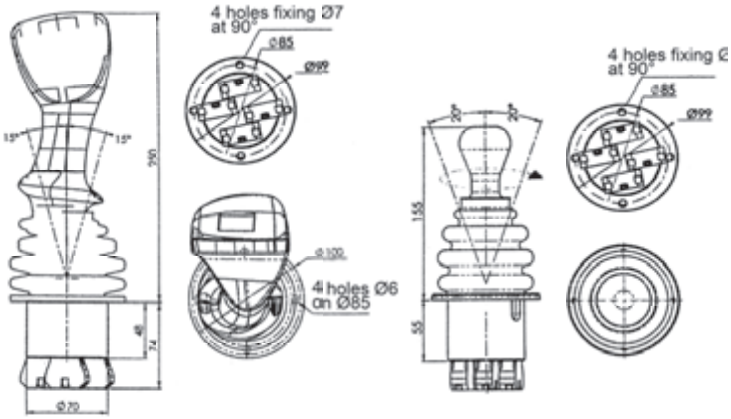

PROPORTIONAL JOYSTICKS

Applications

- Agricultural loader.
- Hedgecutter.
- Loader, etc.

- Flexible and convenient: 2 to 3 proportional functions.
- Compact: mounting at Ø 60 mm, height 115 mm armrest mounting.
- Sold with PVG* control module.
- Can be mounted on any vehicle: voltage 11 to 30 Volts.

Module for PVG

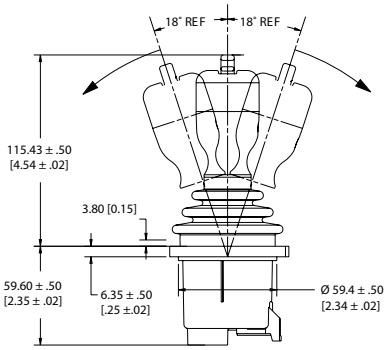

- * Management of joystick power supply and output signal.
- Possible to change rocker switch to on-off command.

Description	Reference
Joystick with 2 functions (1 function + proportional rocker switch)	E03M12N012
Joystick with 3 functions (2 functions + proportional rocker switch)	E03M22N013
Joystick connection kit	N/A
Module for PVG spool valve	E12MPVG3E3S
Module connection kit	N/A

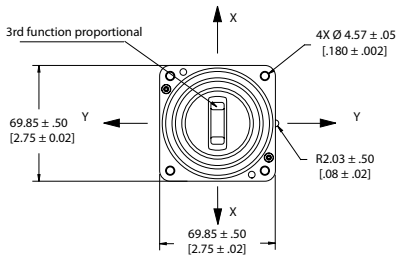

PENDANT CONTROL BOXES

Number of NO push-buttons	Emergency stop	Dimensions in mm		Reference
		A	B	
2	Yes	210	314	E01MR2P1A
4	No	250	440	E01MR4P
4	Yes	250	440	E01MR4P1A
6	No	310	500	E01MR6P

CABLE GLANDS

Type	Metal cable gland	Metal nut	Plastic cable gland	Plastic nut
PG 7	E07P07L001	E07E07L001	E07P07PL01	E07E07P001
PG 9	E07P09L001	E07E09L001	E07P09PL01	E07E09P001
PG 11	E07P11L001	E07E11L001	E07P11PL01	E07E11P001
PG 13	E07P13L001	E07E13L001	E07P13PL01	E07E13P001
PG 16	E07P16L001	E07E16L001	E07P16PL01	E07E16P001
PG 21	E07P21L001	E07E21L001	E07P21PL01	E07E21P001
PG 29	E07P29L001	E07E29L001	E07P29PL01	E07E29P001

CONTROL PEDALS

For fixed station

- ABS thermoplastic control pedal.
- IP65, 10A, 500V.
- Mechanical resistance: 30 million manoeuvres.
- 1 NO contact per pedal.

Name	Reference
Single pedal	E02BP111B1
Double pedal	E02BP121B1

For Plant machinery

- 1 normally closed (NC) and normally open (NO) contact.

Reference: PAEE

FLEXIBLE BLACK PVC CONTROL CABLES

Wire number & nominal section (mm²) (including yellow/green wire)	External diameter in mm	Reference*
4 X 1	8	CA3NVJX1
5 X 1	9	CA4NVJX1
7 X 1	10	CA6NVJX1
12 X 1	13	CA11NVJX1
16 X 1	14	CA15NVJX1
19 X 1	15	CA18NVJX1
27 X 1	19	CA26NVJX1
37 X 1	21	CA36NVJX1

FLEXIBLE PVC CONTROL CABLES

Wire number & nominal section (mm²)	External diameter in mm	Reference*
2 X 1	7	CABMX1
2 X 1.5	8	CABMX15
2 X 2.5	9	CABMX25
2 X 4	11	CABMX4

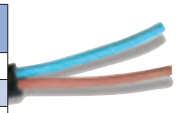

* Price per linear metre

CASES

Specifications

- Cover: fibreglass reinforced polyester.
- Cover screwed on with stainless steel screws.
- Sealing: mortise and tenon joint (IP65, EN605229).
- Internal mounting: direct fastening on threaded holes at back of the base.

ABS MATERIAL	
Dimensions (mm) L x W x H	Reference
ABS box 230 x 80 x 65	E01BP08231
ABS box 110 x 80 x 65	E01BP11081
ABS box 120 x 80 x 90	E01BP12081
ABS box 130 x 80 x 60	E01BP13081
ABS box 130 x 80 x 100	E01BP13082
ABS box 130 x 130 x 100	E01BP13131
ABS box 140 x 80 x 65	E01BP14081
ABS box 140 x 80 x 85	E01BP14082
ABS box 160 x 120 x 90	E01BP16122
ABS box 187 x 122 x 90	E01BP19121
ABS box 201 x 163 x 98	E01BP20161
ABS box 230 x 140 x 95	E01BP23141
ABS box 240 x 191 x 107	E01BP24191
POLYCARBONATE MATERIAL	
Dimensions (mm) L x W x H	Reference
Box 160 x 120 x 90 IP66	E01BP16121
Box 170 x 80 x 85	E01BP17081
Box 200 x 120 x 75 IP66	E01BP20122

RELAYS

- Power consumption: 20A.

Description	Voltage (V DC)	Reference
Single relay	12	RELAUTO1IN
Relay kit	12	E11AAC5COK
Single relay	24	RELAUTO1I1
Relay kit	24	E11ABC5COK

FUSES AND FUSE HOLDERS

Description	Reference
2 A plug fuse	E09UATO021
5 A plug fuse	E09UATO051
7 A plug fuse	E09UATO751
10 A plug fuse	E09UATO10A
15 A plug fuse	E09UATO151
20 A plug fuse	E09UATO201
30 A plug fuse	E09UATO301
40 A plug fuse	E09UATO401
Fuse holder + 20 cm cable with 6 mm² terminals	E09P10ATO1
Fuse holder + 2 panel-mounted terminals	E09P10ATO2

POWER FUSES AND FUSE HOLDERS

Description	Reference
125 A 32 V BF2 power fuse	E09UBF2125
175 A 32 V BF2 power fuse	E09UBF2175
Power fuse holder	E09P10BF21

POWER SWITCHES
Ø 22.5 MM 10A / 24V / IP65

Heads

Emergency stop devices		
	Description	Reference
1	Rotating emergency stop head Ø 40 red	E02KTPAU01
2	Emergency stop head, key switch Ø 40 red	E02KTPAUC1
3	Green top emergency stop push-button Ø 40	E02KTPCPV1

Push-buttons		
	Description	Reference
	Red top push-button	E02KTPR001
4	Green top push-button	E02KTPV001
5	Black top push-button	E02KTPN001
6	Black top push-button with horizontal arrow	E02PS121A1
7	Green top "ON" push-button	E02KTPV002
8	Red top "OFF" push-button	E02KTPR002
	Red top luminous push-button	E02KTPRL01
	Green top luminous push-button head	E02KTPVL01
	Red top luminous push-push button	E02KTPRL02
	Green top luminous push-push button	E02KTPVL02

Inverters		
	Description	Reference
	2 fixed positions luminous red top switch	E02KTR2FL1
	2 fixed positions luminous green top switch	E02KTR2FL2
12	2 fixed positions long lever switch	E02KTR2F01
13	2 fixed positions lever switch	E02KTR2F02
13	3-position head MOM – OFF – MOM switch	E02KTR3R01
13	3-position head ON – OFF – ON switch	E02KTR3F01
13	3-position head MOM – OFF – ON switch	E02KTR3RF1
14	3 spring return key switch positions, removable when in stop position	E02KTR3RC1
14	3-position key switch, removable when in stop position	E02KTR3FC1
14	2-position key switch, removable when in stop position	E02KTR2RC1

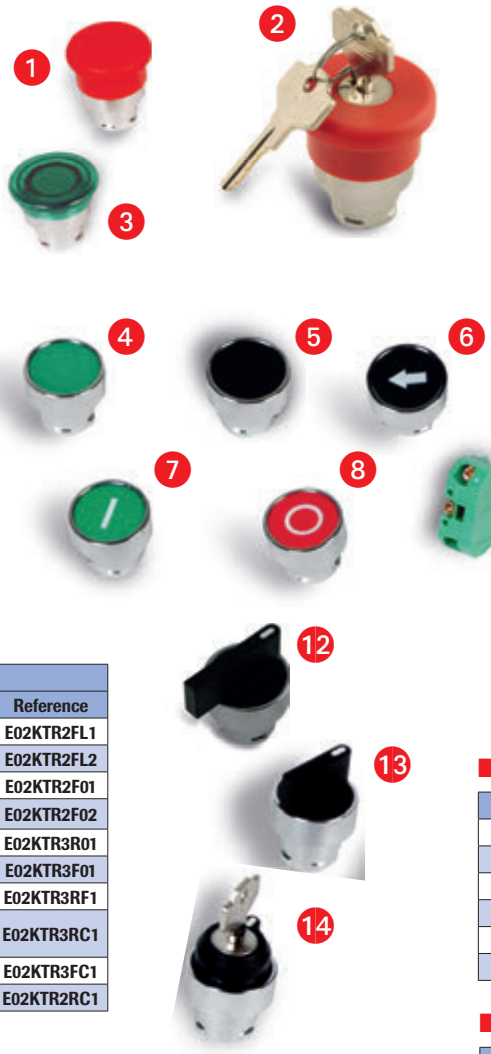

Base blocks and contacts

	Description	Reference
9	Contact 1 NO	E02KA1NO
10	Contact 1 NC	E02KA1NF
11	Base block + 1 NC contact	E02KCNF001
11	Base block + 2 NC contacts	E02KCNF002
11	Base block + 1 NC contact + 1 NO contact	E02KCNOF01
11	Base block + 1 NC contact	E02KCNO001
11	Base block + 2 NC contacts	E02KCNO002
	Base block support for BA9 bulb for indicator lamps*	E02KCC01
	Base block alone	E02KC01

* Bulb not supplied

NO: Normally open

NC: Normally closed

Bulbs and accessories

Description	Reference
12 V bulb	B3453
24 V bulb	B3456
36 V bulb	B3460
220 V bulb	E13A002
380 V bulb	E13A001
Seal cap for push-button	E02KACAP

Indicators

Description	Reference
Red indicator	VROUGE
Green indicator	VVERT
Blue indicator	VBLEUE
White indicator	VBLANC
Yellow indicator	VJAUNE

Order bulbs for indicators separately

Joysticks

Description	Reference
Joystick with 2 hold-down positions	E02KM120B1
Joystick with 2 positions, 1 hold-down (A) and 1 non-hold-down (B)	E02KM121B1
Joystick with 2 non-hold-down positions	E02KM122B1
Joystick with 4 hold-down positions	E02KM140B1
Joystick with 4 positions, 3 non-hold-down and 1 hold-down (A)	E02KM143B1
Joystick with 4 non-hold-down positions	E02KM144B1

Contacts supplied

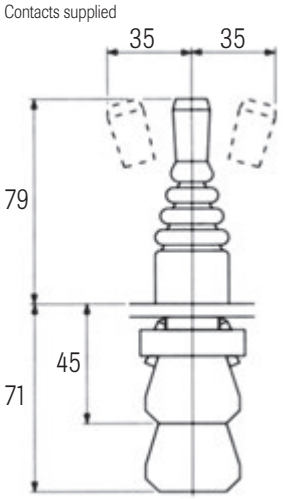

TECHNICAL INFORMATION: Drilling template between two control levers

2 positions

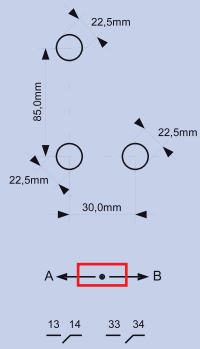

4 positions

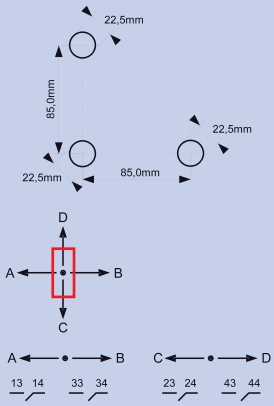

12-24 V TOGGLE SWITCHES

Pierced cap version Contact us

- Ø 12 mm, designed for dashboards.
- Extremely resistant:
  > 2-position model: 50,000 cycles at 12 V at 7.5 A,
  > 3-position model: 50,000 cycles at 12 V at 4 A.

Single-pole switches

	III	II	I	Reference
1	ON	-	OFF	**E02BS1101K**
1	MOM	-	ON	**E02BS111AK**
1	ON	-	ON	**E02BS11NBK**
1	MOM	OFF	MOM	**E02BS102AK**
2	MOM	OFF	MOM	**E02BG102AK**
1	ON	OFF	MOM	**E02BS111K**
1	ON	OFF	ON	**E02BS120AK**

Bi-polar switches

III	II	I	Reference
ON	-	OFF	**E02BS2109K**
MOM	-	ON	**E02BS211AK**
ON	-	ON	**E02BS220BK**
MOM	OFF	MOM	**E02BS202AK**
ON	OFF	MOM	**E02BS211AL**
ON	OFF	ON	**E02BS220K**

Tri-polar switches

III	II	I	Reference
ON	-	OFF	**E02BS310AK**
ON	-	ON	**E02BS31NA1**

ON: notched - OFF: nothing - MOM: spring return

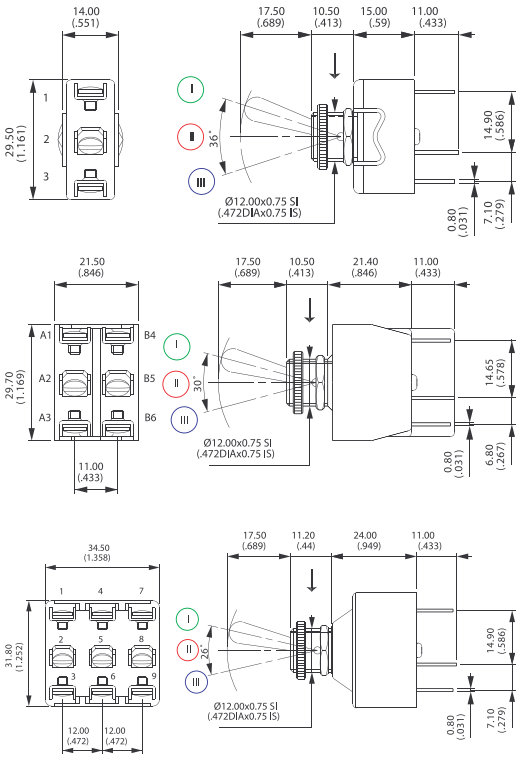

12-24 V PUSH-BUTTON SWITCHES

Name	Reference
Normally open push-button switch	**E02PS111K**
Normally closed push-button switch	**E02PS11NK**

Also available in red Contact us

Normally closed

Normally open

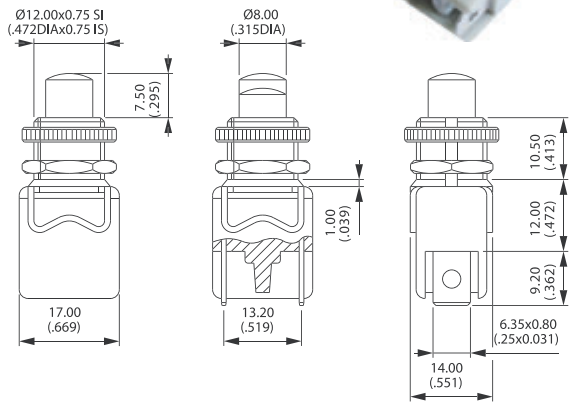

ROCKER SWITCHES

- Protection factor: IP66.
- Maximum voltage intensity:
  > 20 A/12 V,
  > 10 A/24 V.
- 6.35 mm terminal wiring.

Switch position			Single pole type	Bi-polar type	Reference
0	1	2			
ON	-	OFF	X	-	**E02O110AK**
ON	-		-	X	**E02O210AK**
MOM	-	ON	X	-	**E02O101AK**
MOM	-	ON	-	X	**E02O201AK**
ON	-	ON	X	-	**E02O11NAK**
ON	-	ON	-	X	**E02O21NAK**
MOM	OFF	MOM	X	-	**E02O102AK**
MOM	OFF	MOM	-	X	**E02O202AK**
ON	OFF	MOM	X	-	**E02O111AK**
ON	OFF	MOM	-	X	**E02O211AK**
ON	OFF	ON	X	-	**E02O120AK**
ON	OFF	ON	-	X	**E02O220AK**

ON: notched - OFF: nothing - MOM: spring return

Name	Reference	
Lateral moulding	**E02OA02**	1
Central moulding	**E02OA03**	2

MULTI-POINT CONNECTORS AND ACCESSORIES

- Available with 4, 5, 6, 10, 16, 24 and 32 terminal pins.
- Max. voltage intensity: 10 A / 400 V for the 4, 5 and 6 pins and 16 A / 250 V for the 10, 16, 24 and 32 pins.
- Installation in ready to screw on sockets: max. cable cross-section 2.5 mm².
- Silver-plated copper alloy contacts.
- Protection factor: IP44 for the 4, 5 and 6 pins and IP65 for the 10, 16, 24 and 32 pins (linked connectors).

Inserted base blocks

No. of terminal pins	No. of levers	Dimensions (mm)	Height (mm)	Reference
4, 5, 6	1	40 x 28	23	**E08HEE05A1**
10	1	29 x 81	27	**EE101L**
16	1	29 x 96	27	**EE161L**
24	1	43 x 140	27	**EE241L**
32	2	90 x 124	33	**EE322L**

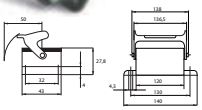

Protruding base blocks

No. of terminal pins	No. of levers	Dimensions (mm)	Height (mm)	Cable gland	Reference
10	1	50 x 63.5	52	16	**ES10161L**
16	1	50 x 80	57	16	**ES16161L**
24	1	57 x 144	56	21	**ES24211L**
32	2	87 x 125	90	29	**ES32292L**

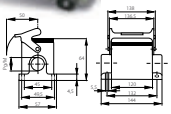

Protruding base blocks with cover

No. of terminal pins	Dimensions (mm)	Height (mm)	Cable gland	Reference
16	50 x 80	57	21	**ES16211LC**
24	57 x 144	56	21	**ES24211LC**

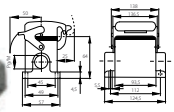

Lateral output plugs

No. of terminal pins	Dimensions (mm)	Height (mm)	Cable gland	Reference
4, 5, 6	28 x 27	50.3	11	**E08HCL05C1**
10	29.5 x 63	54.5	13	**PL10161V**
16	29.5 x 79.5	54.5	16	**PL16161V**
24	43 x 120	76	21	**PL24211V**

Straight plugs

No. of terminal pins	Dimensions (mm)	Height (mm)	Cable gland	Reference
4, 5, 6	26.8 x 28	56	11	**PD5111V**
10	29.5 x 63	47	13	**PD10131V**
16	29.5 x 79.5	47	16	**PD16161V**
24	43 x 120	76	21	**PD24211V**
32	82.5 x 94	94	29	**PD32292V**

Plug covers

No. of terminal pins	Reference
4, 5, 6	**CAPOT51V**
10	**CAPOT101V**
16	**CAPOT161V**
24	**CAPOT241V**
32	**CAPOT322V**

Male inserts

No. of terminal pins	Numbering	Reference
3 + earth	1 - 3 + E	**IM4P**
4 + earth	1 - 4 + E	**IM5P**
10	1 - 10	**IM10**
16	1 - 16	**IM16**
24	1 - 24	**IM24**
2 x 16	1-16, 17-32	**E08HIM32K1**

Female inserts

No. of terminal pins	Numbering	Reference
3 + earth	1 - 3 + E	**IF4P**
4 + earth	1 - 4 + E	**IF5P**
10	1 - 10	**IF10**
16	1 - 16	**IF16**
24	1 - 24	**IF24**
2 x 16	1-16, 17-32	**E08HIF32K1**

Plug covers

No. of terminal pins	Reference
10	**CAPOT101L**
16	**CAPOT161L**
24	**CAPOT241L**
32	**CAPOT322L**

Straight plugs

Dimensions (mm)	Height (mm)	Cable gland	Reference
24 x 24	44	11	**PD5111L**

POWER OUTLETS

Description	Max. current	Connection	Reference	
Male outlet DIN9680 3 terminals	25 A	Single terminal 6.35 mm	**PME3B**	1
DIN43650 female connector 3 terminals	25 A	Single terminal 6.35 mm	**PFE3B**	
Male/female connector 2 terminals	40 A	TO be crimped	**E08M02VF02**	2

DIN 43650 SOLENOID VALVE CONNECTORS

Description	Reference	
Black connector	**PHN**	1
Grey connector	**PHG**	2
Connector with indicator, 8 to 24 V DC	**PHV824VCC**	3
Connector with indicator, 8 to 24 V AC	**PHV824VAC**	3
Rectifier connector, 250 V max.	**CR**	4
Wired right-hand connector, 2 m	**E28DIN2M01**	5
Wired angled connector, 2 m	**E28DIN2M02**	6
Connector with indicator and free wheeling diode, 12 V, wired, 2 m	**E28DIN2M03**	7

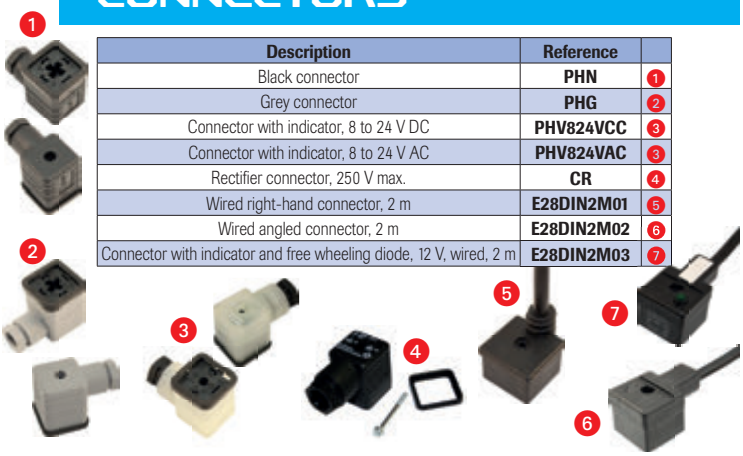

DEUTSCH DT SERIES CONNECTORS

- Maximum current: 7.5 A.
- Wire cross-section: 0.50 mm² - 1.5 mm² (AWG 20-16).
- Protection factor: IP 67 (with linked connectors and seals).

Male connectors

Number of contacts	Reference	Contacts to use	Wedgelocks
2	**E08M02VM01**	E08ACDM031	**E08ACAL2M01**
3	**E08M03VME1**	E08ACDM031	**E08ACAL3M01**
4	**E08M04VME4**	E08ACDM031	**E08ACAL4M01**
6	**E08M06VME04**	E08ACDM031	**E08ACAL6M01**
8	**E08M08VME1**	E08ACDM031	**E08ACAL8M01**
12	**E08M12VME1**	E08ACDM031	**E08ACAL12M01**

Accessories

Description	Reference	
Male contact for 0.5 mm² to 1.5 mm² wire	**E08ACDM031**	1
Female contact for 0.5 mm² to 1.5 mm² wire	**E08ACDF031**	2
Sealing plug for blank contact	**E08APLOT01**	3

Female connectors

Number of contacts	Reference	Contacts to use	Wedgelocks
2	**E08M02VFE5**	E08ACDF031	**E08ACAL2F01**
3	**E08M03VFE1**	E08ACDF031	**E08ACAL3F01**
4	**E08M04VFE4**	E08ACDF031	**E08ACAL4F01**
6	**E08M06VFE04**	E08ACDF031	**E08ACAL6F01**
8	**E08M08VFE1**	E08ACDF031	**E08ACAL8F01**
12	**E08M12VFE1**	E08ACDF031	**E08ACAL12F01**

Complete case of Deutsch connectors See page 223

AMP SUPERSEAL CONNECTORS

- Maximum current: 14 A.
- Wire cross-section: 0.50 mm² - 1.5 mm² (AWG 20-16).
- Protection factor: IP 67 (with linked connectors and seals).

Male connectors

Number of contacts	Reference	Contacts to use
2	**E08M02CM**	**E08ACDM**
3	**E08M03CM**	**E08ACDM**
4	**E08M4CM**	**E08ACDM**

Accessories

Description	Reference	Item
Male contact for 0.5 mm² to 1.5 mm² wire	**E08ACDM**	1
Female contact for 0.5 mm² to 1.5 mm² wire	**E08ACDF**	2
Red gasket for contact	**E08AJOINT**	3
Cap for 2-way connector	**E08AJOINT3**	4
Cap for 3-way connector	**E08AJOINT4**	5

Female connectors

Number of contacts	Reference	Contacts to be used
2	**E08M02CF**	**E08ACDF**
3	**E08M03CF**	**E08ACDF**
4	**E08M4CF**	**E08ACDF**

Wiring terminals

Colour	Cable Ø	Reference
Red	0.75 to 1.5	**CPFRI6**
Blue	1.5 to 2.5	**CPFBI6**
Yellow	2.5 to 6	**CPFJ6**

Sleeve

Colour	Cable Ø	Reference
Red	0.7 to 1.5	**MANR15**
Blue	1.5 to 2.5	**MANB25**
Yellow	2.5 to 6	**MANJ6**

Eyelet terminal

Colour	Cable Ø	Eyelet Ø	Reference
Red	0.75 to 1.5	4	**COR4**
Red	0.75 to 1.5	5	**COR5**
Red	0.75 to 1.5	6	**COR6**
Red	0.75 to 1.5	8	**COR8**
Blue	1.5 to 2.5	4	**COB4**
Blue	1.5 to 2.5	5	**COB5**
Blue	1.5 to 2.5	6	**COB6**
Blue	1.5 to 2.5	8	**COB8**
Blue	1.5 to 2.5	10	**COB10**
Yellow	2.5 to 6	4	**COJ4**
Yellow	2.5 to 6	5	**COJ5**
Yellow	2.5 to 6	6	**COJ6**
Yellow	2.5 to 6	8	**COJ8**
Yellow	2.5 to 6	10	**COJ10**

INDUCTIVE SENSORS

Specifications

- Normally open contact (NO).
- Switching current: 200 mA.
- Flush installation possible.
- Status display LED.
- M12 connectors.
- Power supply: 10-30V.

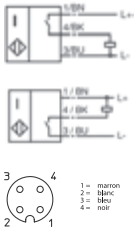

Type	Nominal range (mm)	Z	Reference
PNP	0...4	12	**E16IP12C05**
NPN	0...4	12	**E16IN12C03**
PNP	0...8	18	**E16IP18C01**
NPN	0...8	18	**E16IN18C01**
PNP	0...15	30	**E16IP30C30**
NPN	0...15	30	**E16IN30C30**

PNP: controlled by "+" NPN: controlled by "-"

COMPLETE POSITION SENSORS

- Length-adjustable roller.
- PG13 connection.

Reference: FDCL34A90

SUB-MINIATURE INDICATORS

- Drill hole diameter 6.4 mm.
- Cable length 150 mm.

Voltage	Colour	Reference	Item
12 VDC	Red	**VOYANT12VR**	1
12 VDC	Green	**VOYANT12VV**	1
12 VDC	Orange	**VOYANT12VO**	1
24 VDC	Red	**VOYANT24VR**	1
24 VDC	Green	**VOYANT24VV**	1
24 VDC	Orange	**VOYANT24VO**	1
LED		**E20LED5RV1**	2
Clip		**E19OCLIP51**	3

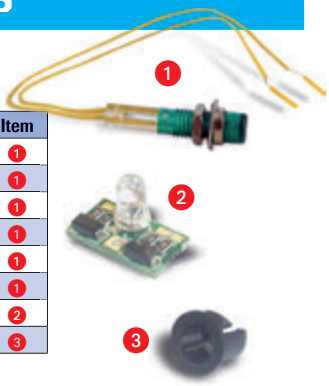

BUZZERS

Voltage (V DC)	Sound intensity (dB)	Use	Item	Reference
6 to 12	105	2 intermittent sounds	1	**BUZZER1784**
1.5 to 16	100	Continuous	2	**BUZZER1781**
24	76	Buzzer (cab)	3	**E13BB76**
3 to 28	85	Continuous	4	**E13BB85**
3 to 28	95	Continuous	5	**BUZZER95DB**

PRESSURE TRANSMITTERS

Applications

- Cylinder pressure control.
- Maintains constant pressure.

- Extremely compact: length 58 mm Ø 22 mm.
- 1% accuracy of measuring range.
- Extremely resistant, 3 x measuring range without gasket with thermal compensation (-20 to 100°C).
- Practical, connection with M12 connector (IP66 and IP68).

Measuring range pressure (bar)	250	400	600
Output (mA)	4 .. 20		
Power (V DC)	10 to 30		
Response time (ms)	< 1		
Fluid temperature (°C)	-40 to 130		
Ambient air temperature (°C)	-40 to 105		
Electrical connection	M12		
Hydraulic connection	1/4BSP		
Material	316 stainless steel		
Reference	**E17P250I04**	**E17P400I01**	**E17P600I03**

PRESSURE SWITCHES

7 to 400 bar

- Port: 1/4 BSP female.
- Connector supplied.
- Voltage intensity: 5 A/30 V.

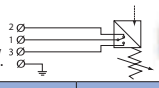

Maximum pressure (bar)	Setting pressure (bar)	Reference
400	7 to 70	**E16R070101**
400	10 to 160	**E16R160101**
500	20 to 250	**E16R250101**
500	25 to 400	**E16R400101**

1 to 10 bar

- Permissible overpressure: 600 bar.
- Open and closed contact.
- Thread R 1/4".
- Switching current: 100 VA.
- Switching frequency: 200/min.
- Max. voltage: 42V.
- Setting pressure: 1 to 10 bar.

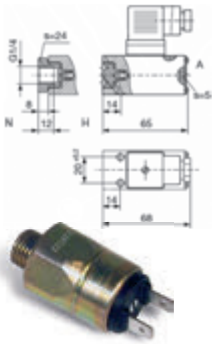

Description	Reference
Normally open	**E16R010100**
Normally closed	**E16R010102**

Protective caps

Description	Reference
Protective caps	**PRCOIFFE2F**

PRE-WIRED CABLES

Type	Length (m)	Reference
Straight	2	**E28M122MD**
Elbow	2	**E28M122MC**
Straight	5	**E28M125MD**
Elbow	5	**E28M125MC**
Straight	10	**E28M1210MD**
Elbow	10	**E28M1210MC**

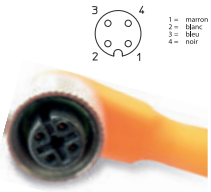

CUSTOMISE YOUR BOXES!

Depending on your specifications, Hydrokit will supply you with a single box or series of boxes with or without markings.

- Quality manufacture.
- Customised design.
- Price adapted to large series production.
- Control box + Actuators + Distribution: guaranteed correct operation.
- PVG, CETOP, PWM valve assembly control.
- Electrical actuator control: gear motor, cylinder.
- Flexible: creation of specific programs
  > proportional or on-off outputs
  > frequency and on-off inputs
  > potentiometer, touch sensitive screen.

Multiple applications

- Machine radio control,
- Electrical piloting,
- position checking.

RADIO TRANSMITTERS/RECEIVERS

Mini range

- Transmitter 2 or 4 buttons + on/off:
  > free field reach: 30m,
  > FM 418 Mhz,
  > Response time: 100 mS,
  > IP65 -10°C +75°C,
  > Powered by 2 LR6 batteries, supplied.
- Receiver with 2m cable:
  > IP67 -10°C +75°C,
  > 9 to 30 VDC,
  > Working Indicator light for each function,
  > Emergency stop,
  > bypass output on each button.
- CE compliant.

Reference

2-button: E23HC02001MINI

4-button: E23HC04001MINI

Standard range

- Transmitter 2, 4, 6, 8, 10 or 12 buttons + emergency stop + "dead man":
  > free field reach: 100m,
  > 433 / 868 Mhz,
  > Response time: 100 mS,
  > IP65 -10°C +75°C,
  > Powered by 4 LR6 batteries, supplied,
  > Delivered with shoulder strap.
- Receiver with 2m cable:
  > IP67 -10°C +75°C,
  > 9 to 30 VDC,
  > Working Indicator light for each function,
  > Emergency stop,
  > bypass output on each button.
- CE compliant.
- 256 different (modifiable) addresses.
- Can be set to disable the by pass on certain functions (single acting), maintained command (internal).
- Also exists with double speed (the button pushes 2 levels and activates an additional by pass).

6-button: E23HC06001V

10-button: E23HC10001V

12-button: E23HC12001V

FILTRATION UNITS FOR CONTINUOUS TRANSMISSION GEARBOX (FENDT, CNH, ETC.)

- Double filtration 25 + 6 µm.
- 2 filling pipes with Ø 12 cylindrical stub or M10 x 100 threaded stub.
- Trolley mounted for easy transportation.
- Can be used for oil transfers and de-pollution filtration to 25 µm.
- Optional volume meter.

Specifications	Reference
Unit with volume meter	EAG012006A
Unit without volume meter	EAG012006B
Kit 4 x 25 µm cartridges and 2 x 6 µm cartridges	EAG012006C

FILTRATION UNITS 10 µM

Mineral oil pumping and filtration for different uses (oil refill, de-pollution, oil regeneration).

- Flow rate: 30 to 60 l/min at 3 bar.
- Single-phase motor, 220V.
- On-Off switch.
- 10 µm absolute filtration level.
- Weight: 25 kg.
- Trolley mounted for easy transportation.

Name	Reference
Filtration units 30 l/min	AGHF03010E
Filtration units 60 l/min	AGHF06010E
Filtration unit 30 l/min with hose support	AGHF06010E01
Replacement cartridge	CRL04010AA

AGHF06010E01

AGHF03010E

FILTRATION KITS WITH PUSH-PULL COUPLER 1/2" BSP

This equipment is designed for hydraulic circuit filtration.

- Direct connection to spool valve couplers.
- Fast and more efficient filtration for your machines.
- 10 micron filtration unit with clogging indicator.
- Fastening strap.
- High flow rate of 120 l/min, 215 bar.
- Safety: equipped with check valve.

Filtration kit reference:
EAG1200101A

Cartridge reference: CPL12010AA

MANUAL FILL PUMP WITH 10 µM FILTER

Reference: EAP00100101

- Hydraulic reservoir filled by couplers.
- Manual filling.

OIL FILLER PUMPS FOR TRACTORS

Specifications

- 12 Volts, 4.5 l/min (during 30 min).
- Supplied with pipe and cable.
- Filling is carried out by tractor return coupling (3/4 or 1/2 ISO-A coupler).

Reference:
EAG005000C

VIDEOSCOPES

Take a look inside your parts!

- This handle with a screen and a flexible cable with a camera at the end enables you to inspect the inside of any part.
- Available in 2 versions: with 8.5 mm or 5.5 mm diameter probe.
- Supplied assembled in a case with mirrors for the camera head, plus magnet and hook accessories.

Technical specifications

- Length of semi-flexible spiral pipe: 1000 mm.
- Bending radius: 30 mm.
- Aspherical lens Ø 3.6 mm.
- Camera protection: sapphire glass.
- End protection: stainless steel.
- Viewing angle: Horizontal 46°,
- Vertical 34°, Diagonal 56°.
- Possible to connect it to a TV screen.
- Light source: 6 white mini-LEDs.

Name	Reference
Videoscope box with Ø 8.5 mm probe including: • 1 handle with 8.5 mm probe, L = 1 m • 1 AV connector (video) • 1 orientable mirror end-piece (70° to 110°) • 1 magnet end-piece • 1 hook end-piece	**EAEVIDEO5380H**
Videoscope box with Ø 5.5 mm probe including: • 1 handle with Ø 5.5 mm probe, L = 1 m • 1 AV connector (video) • 1 orientable mirror end-piece (70° to 110°) • 1 magnet end-piece • 1 hook end-piece	**EAEVIDEO5355H**
3 m extension cable for 8.5 mm version	**EAEVIDEO5385**
Screen shot software for EAEVIDEO5380H videoscope	**E18CUSB2SVIDEO**

18-V PORTABLE ELECTRIC GREASE PUMPS

Electric grease pump for lubricating agricultural, construction and industrial machines.

LINCOLN version

- High working pressure: 476 bar (low speed mode).
- Stand-alone tool: no need for compressed air or electrical network.
- Practical: uses 400 g cartridge holder, bulk filling and filling stud.
- Well-equipped pump: two operating speeds and pulse counter.
- High flow: 240 g/min (high flow rate mode at 69 bar).
- Use of grease grade "000" to "2".
- Complete unit: pump supplied with 1 battery, a 220 volt charger and a carrying case.

Reference: EAZPGE0005

HYDROKIT version

- High working pressure: 400 bar.
- Stand-alone tool: no need for compressed air or electrical network.
- Practical: uses 400 g cartridge holder or lube shuttle cartridges, bulk filling and filling stud.
- Well-equipped pump: bleed button, battery level indicator, flow regulation, fastener with 4 claws, and trigger lock.
- High-performance: 2 to 3 grease cartridges per battery charge (depending on grease viscosity and pressure).
- Use of grease grade "000" to "2".

- Includes a grease pump, two 18 V batteries, a 220 V charger, a cartridge holder, a lube shuttle cartridge tube, and a carrying case.

Reference: EAZPGE0006LH

SEAL KIT

Composition

- Box of seals, ORFS flanges and SAE washers.

References:
EAZCOFFR020

5 SETS OF O-RINGS, SHORE HARDNESS: 90

Composition

- The most comprehensive set available on the market (1380 O-rings).

Reference: EAZCOFFR010

BAND SEAL TO CUT

Specifications

- Ø 1.5, 1.78, 2.00, 2.50, 2.62, 3.00, 3.50, 3.53, 4.00, 5.00, 5.33, 5.70, 6.99, 8.40.

Reference:
EAZCOFFR019

VACUUM PUMPS

Work on a machine without having to drain the reservoir.

- No more draining the reservoir.
- No more oil leaks while you are working.
- The oil is held in the reservoir by the vacuum.
- End piece with clip for chaning the magnetic insert plus additional inserts.
- Vacuum control via pressure gauge and flow control valve.

12V power supply reference:
ESVACUM001

Pneumatic supply reference
without carrying case: ESVACUM002
with small size carrying case: ESVACUM003
with large size carrying case: ESVACUM004

EAM50600D1 DIGITAL PRESSURE GAUGE KITS

Composition

- 1 EAM50600D1 pressure gauge in a case with foam insert.
- 1 connection between pressure gauge and hose.
- 2 pressure connections, 1/4 BSP and 10x100 (16x200).
- 2 male/female reducers (3/8BSP / 1/4BSP and 1/2BSP / 1/4BSP).
- 1 pressure gauge adapter for pressure connection (16x200).
- 1 connecting hose, 16x200 (length 2,000 mm).

Reference: EAL0010004

EAM63600D3 DIGITAL PRESSURE GAUGE KITS

Composition

- 1 EAM63600D3 backlit pressure gauge in a case with foam insert.
- 1 connection between pressure gauge and hose.
- 2 pressure connections, 1/4BSP and 10x100 (16x200).
- 2 male/female reducers (3/8BSP / 1/4BSP and 1/2BSP / 1/4BSP).
- 1 pressure gauge adapter for pressure connection (16x200).
- 1 connecting hose, 16x200 (length 2,000 mm).

Reference: EAL0010005

DIGITAL PRESSURE GAUGES

- Practical, with its permanent LCD 4-digit display.
- Fast connection.
- Automatic reset to zero.

Specifications	Rectangular version	Round version
Measuring range (bar)	0 to 600	0 to 600
Unit	bar	bar, psi, mPa
Bar graph	No	10 segments
Accuracy	0.3 % final value ± 1 digit	0.5 % final value ± 1 digit
Conversion rate (qt/s)	5	5
Overload limit (bar)	1800	1000
Protection	IP65	IP65
Fluid temperature (°C)	-40 to 130	-30 to 85
Ambient air temperature (°C)	-40 to 105	-10 to 60
Box	Painted aluminium	Stainless steel
Dimensions (mm)	100 x 66 x 44	Ø 90 x h 114
Weight (kg)	0.4	0.4
Mounting	¼ BSP	¼ pressure gauge
Memorises min and max pressure peaks	No	Yes
Protective cap	No	Yes
Backlighting	No	Yes

1 Digital pressure gauge only (Pressure gauge 1/4 connection): EAM50600D1

2 Digital pressure gauge with F16x200 pressure tapping: EAM50600D2

3 Digital pressure gauge with M16x200 pressure tapping: EAM50600D3

4 Digital pressure gauge only (Pressure gauge 1/4 connection): EAM63600D3

5 Digital pressure gauge with M16x200 pressure tapping: EAM63600D4

2 PRESSURE GAUGES KIT, Ø 63 MM

Composition

- Light and easy to carry.
- 1 pressure gauge 0 to 400 bar.
- 1 pressure gauge 0 to 600 bar.
- 1 x 1/4BSP pressure gauge adapter.
- 1 direct pressure gauge connection on 1/4BSP pressure outlet.
- 1 connecting hose (length 2,500 mm).
- 2 pressure connections (M12 and 1/4BSP).
- 2 reducers: male 3/8BSP - female 1/4BSP and male 1/2BSP - female 1/4BSP.

Reference: EAL0020100

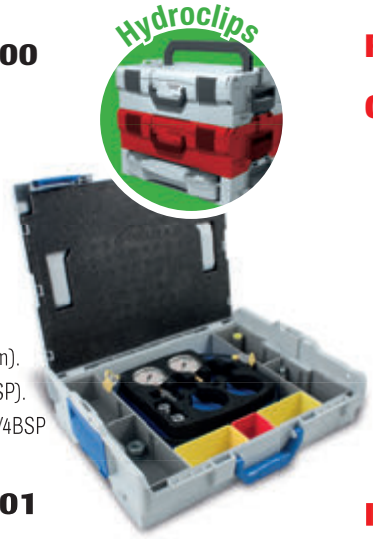

Composition

- Light and easy to carry.
- 1 pressure gauge 0 to 250 bar.
- 1 pressure gauge 0 to 600 bar.
- 1 x 1/4BSP pressure gauge adapter.
- 1 direct pressure gauge connection on 1/4BSP pressure outlet.
- 1 connecting hose (length 2,000 mm).
- 2 pressure connections (M12, 1/4BSP).
- 2 reducers: male 3/8BSP - female 1/4BSP and male 1/2BSP - female 1/4BSP.

Reference: EAL0020101

4 PRESSURE GAUGES KIT, Ø 63 MM

Composition

- Light and easy to carry.
- 4 pressure gauges: 0 to 6 bar, 0 to 40 bar, 0 to 250 bar, 0 to 600 bar.
- 1 x 1/4BSP pressure gauge adapter.
- 1 direct pressure gauge connection on 1/4BSP pressure connection.
- 1 connecting hose (length 2,500 mm).
- 2 pressure connections (1/2 and 1/4BSP).
- 2 reducers: male 3/8BSP - female 1/4BSP and male 1/2BSP - female 1/4BSP.

Reference: EAL0040100

Composition

- Light and easy to carry.
- 4 pressure gauges: 0 to 6 bar, 0 to 40 bar, 0 to 250 bar, 0 to 400 bar.
- 1 x 1/4BSP pressure gauge adapter.
- 1 direct pressure gauge connection on 1/4BSP pressure connection.
- 1 connecting hose (length 2,500 mm).
- 2 pressure connections (M12 and 1/4BSP).
- 2 reducers: male 3/8BSP - female 1/4BSP and male 1/2BSP - female 1/4BSP.

Reference: EAL0040101

8 PRESSURE GAUGES KIT, Ø 63 MM

Composition

- Light and easy to carry.
- 1 pressure gauge 0-6 bar
- 4 pressure gauges 0-250 bar
- 2 pressure gauges 0-40 bar
- 1 pressure gauge 0-600 bar
- 8 x 1/4 pressure gauge connectors M16x200
- 8 capillary tubes, 1,500mm
- 2 pressure connections, 1/4BSP
- 2 pressure connections, 1/8BSP
- 2 pressure connections, 1/4"NPT
- 1 pressure connection

Reference: EAL0080010

MADE-TO-MEASURE CARRYING CASE

We can compose your case according to your requirements. There are two different versions, one specially adapted for fittings and pressure gauges, and the other for larger pressure tappings.

The next page tells you more about these kits. Refer to the diagram of the composition, Choose the products you want from the pages listed and contact Hydrokit to get your own customised case.

HYDROCLIPS - FULLY CUSTOMISABLE CARRYING CASE

- Highly resistant case (its cover can support a load of 100 kg), it is practical, light and clips together for easier transporting.

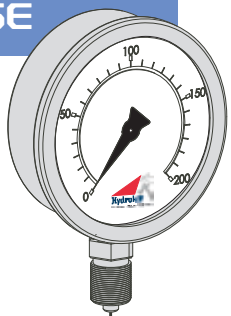

Ø 63 pressure gauges
See page 210

Pressure gauge unions
See page 211

16x200 connecting hoses
See page 211

Union for coupling two 16x200 connecting hoses
See page 211

16x200 connecting hoses
See page 211

> 2 VERSIONS TO MEET YOUR NEEDS

Pressure gauge case

With specially designed foam insert to fit your pressure gauges and unions

Supplementary case

With plastic compartments for all your oily and cumbersome pressure connections.

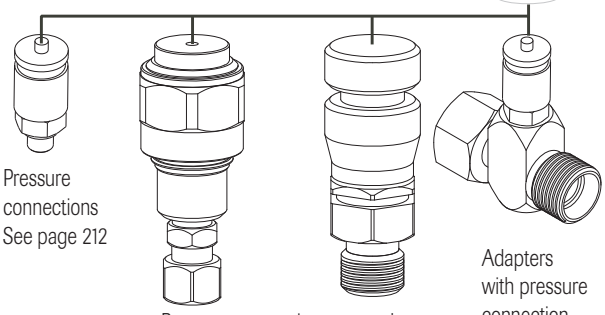

Pressure connections
See page 212

Pressure connection on coupler
See page 212

Adapters with pressure connection
See page 212

Ø 63 PRESSURE GAUGES, REAR CONNECTION WITH FRONT FLANGE

Graduation (bar)	Graduation scale	Reference
-1 to 1.5	0.1	UC6315F1
0 to 6	0.2	UC6306F
0 to 10	0.5	UC6310F
0 to 15	0.5	UC6315F
0 to 25	1	UC6325F
0 to 40	2	UC6340F
0 to 60	2	UC6360F
0 to 100	5	UC63100F
0 to 160	5	UC63160F
0 to 250	10	UC63250F
0 to 400	20	UC63400F
0 to 600	20	UC63600F

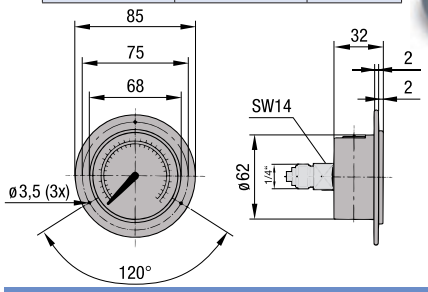

Ø 100 PRESSURE GAUGES, REAR CONNECTION WITH FRONT FLANGE

Graduation (bar)	Graduation scale	Reference
0 to 10	0.5	UC10010F
0 to 15	0.5	UC10015F
0 to 25	1	UC10025F
0 to 40	2	UC10040F
0 to 60	2	UC10060F
0 to 100	5	UC100100F
0 to 160	5	UC100160F
0 to 250	10	UC100250F
0 to 400	20	UC100400F
0 to 600	20	UC100600F

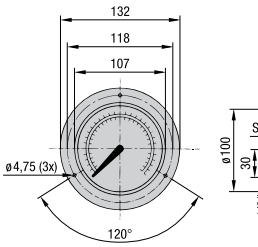

Ø 63 VERTICAL CONNECTION PRESSURE GAUGES

Specifications

- Stainless steel casing.
- Glycerine-filled for needle damping in the event of vibrations.
- White dial with double graduated scale in bar and psi.
- Fluid temperature: 0°C to 65°C.
- Accuracy class: 1.6%.

Graduation (bar)	Graduation scale	Reference
-1 to 1.5	0.1	UC63151
0 to 2.5	0.1	UC63251
0 to 6	0.2	UC6306
0 to 10	0.5	UC6310
0 to 15	0.5	UC6315
0 to 25	1	UC6325
0 to 40	2	UC6340
0 to 60	2	UC6360
0 to 100	5	UC63100
0 to 160	5	UC63160
0 to 250	10	UC63250
0 to 400	20	UC63400
0 to 600	20	UC63600

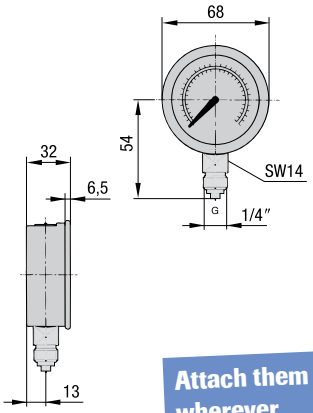

Attach them wherever you want.

Ø 100 VERTICAL CONNECTION PRESSURE GAUGES

Specifications

- Stainless steel casing.
- Tapered brass BSP connector.
- Pressure gauge tube in special bronze.
- Precision moving parts in hard brass.
- Glycerine-filled for needle damping in the event of vibrations.
- White dial with double graduated scale in bar and psi.
- Fluid temperature: 0°C to 65°C.
- Accuracy class: 1%.

Graduation (bar)	Graduation scale	Reference
-1 to 1.5	0.1	UC10015
0 to 15	0.5	UC100151
0 to 25	1	UC10025
0 to 40	2	UC10040
0 to 60	2	UC10060
0 to 100	5	UC100100
0 to 160	5	UC100160
0 to 250	10	UC100250
0 to 400	20	UC100400
0 to 600	20	UC100600

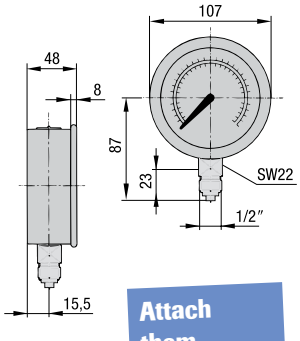

Attach them wherever you want.

Ø 63 PRESSURE GAUGE MOUNT WITH MAGNET

Specifications

- Support with magnet for 63 mm diameter pressure gauge.

Reference: EAZPORTMAN1

Ø 63 PRESSURE GAUGE MOUNT WITH SUCTION PAD

Specifications

- Support with suction pad for 63 mm diameter pressure gauge.

Reference: EAZPORTMAN2

PRESSURE GAUGE UNIONS (BULKHEAD MOUNTING)

Specifications

- Pressure gauge to connecting hose unions.

	Pressure gauge diameter	Diameter C	A	B	D/ flat	E	Reference
1	63	1/4 BSP	63	18	19	16x200	**PPM14UC63**
2	100	1/2 BSP	64.5	18	27	16x200	**PPM12UC100**

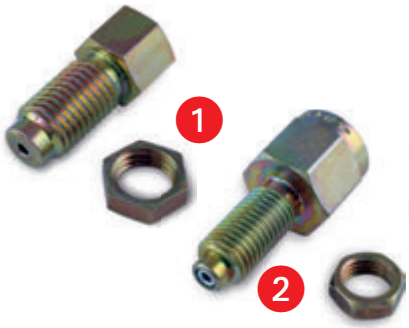

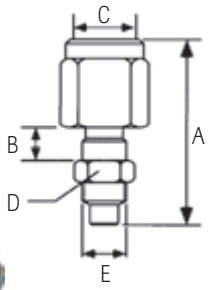

FEMALE UNIONS FOR PRESSURE GAUGE

For pressure gauge	Tube diameter (mm)	Reference: French series	Reference: BSP series	Reference: DIN light duty series	Reference: DIN heavy duty series
Ø63	6	**UF06N014G**	-	-	**UF06S014G**
	8	**UF08N014G**	-	**UF08L014G**	**UF08S014G**
	10	**UF10N014G**	-	**UF10L014G**	-
	12	**UF12N014G**	-	**UF12L014G**	-
	13	-	**UF13G014G**	-	-
Ø100	10	**UF10N012G**	-	**UF10L012G**	-
	12	**UF12N012G**	-	**UF12L012G**	-
	13	-	**UF13G012G**	-	-
	14	-	-	-	**UF14S012G**
	15	-	-	**UF15L012G**	-
	16	-	-	-	**UF16S012G**
	18	-	-	**UF18L012G**	-

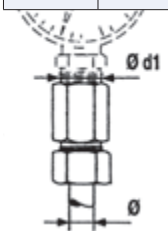

MALE/FEMALE ADAPTERS

G	E	h	Reference
M16 x 15	M16 x 200	39	**SAD2015P**
M16 x 2	S12.65 x 1.5	35	**SAD1220P**
M16 x 2	M16 x 1.5	39	**SAD1520P**
S12.65 x 1.5	M16 x 2	39	**SAD2012P**

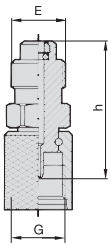

CONNECTION HOSES FOR PRESSURE CONNECTIONS

- Hoses with turning knurled nuts on both ends (16 x 200).
- Max. working pressure: 630 bar.
- Working temperature: 50°C to 140°C.
- Interior passage Ø 1.8 mm.

A (mm)	Reference
1000	**PPF1000**
1500	**PPF1500**
2000	**PPF2000**
2500	**PPF2500**
3200	**PPF3200**
4000	**PPF4000**
5000	**PPF5000**

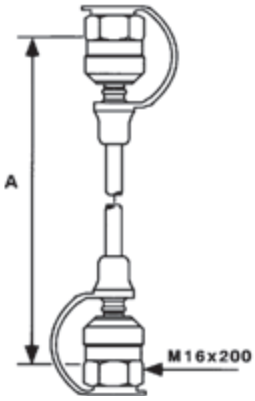

MALE UNIONS

G	H	SW	Reference
M16 x 2	42.4	17	**EASAAAA**
M16 x 1.5	44.5	17	**EARABAB**

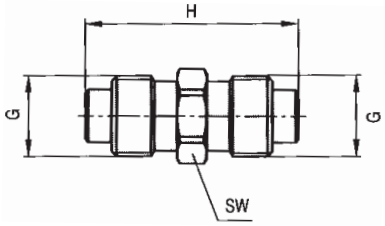

DIRECT PRESSURE GAUGE TO PRESSURE CONNECTION UNION

G	Type of pressure gauge	h	SW	Reference
1/4 BSP	Ø 63	41	19	**EAKAHAA**
1/2 BSP	Ø 100	51	27	**EAKAJAA**

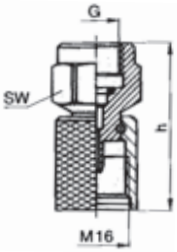

16X200 PRESSURE CONNECTIONS

Specifications

- Screw in pressure connection up to 350 bar pressure.
- Max. working pressure: 630 bar.

Thread F	h	Reference
M8 x 100	38	PP8100
M10 x 100	38	PP10
M10 x 125	38	PP10X125
M12 x 150	40	PP12
M14 x 150	40	PP14
M16 x 150	37	PP16
1/8"	37	PP18BSP
1/4"	40	PP14BSP
3/8"	37	PP38BSP
1/8NPT	38	PP18NPT
1/4NPT	40	PP14NPT
5/16 - 24UNF	36	PP516UNF
7/16 - 24UNF	38	PP716UNF
1/2 - 20UNF	37	PP12UNF
9/16 - 18UNF	40	PP916UNF

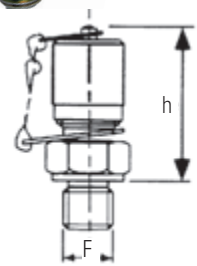

PRESSURE CONNECTIONS WITH CYLINDRICAL STUB

Tube diameter	L	Reference
8	20	PPEL08
10	22	PPEL10
12	22	PPEL12
13	22	PPEL13
15	25	PPEL15
17	28	PPEL17
18	28	PPEL18

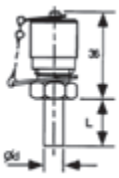

PRESSURE CONNECTIONS FOR PRESSURE GAUGES

Pressure connection on coupler

Description	Item	Reference
On female screw-on valve	1	EASAAVVR8
On male 1/2 coupler	2	EARAACHM12
Pressure connection on JCB coupler, 16x200	3	EAR014JCB2

"Coupler" pressure connection

Coupler	Mounting	Item	Reference
Male	1/8 NPT	4	EAS018BHB
Female	1/8 NPT	5	EAK018BGB
Female	1/4 NPT	5	EAK014BGB
Female	Male 16x200	6	EASAABG*

* Ideal for working on the latest agricultural equipment and construction machines (CAT, Case, Claas, CNH, John Deere, Renault, McCormick, etc.).

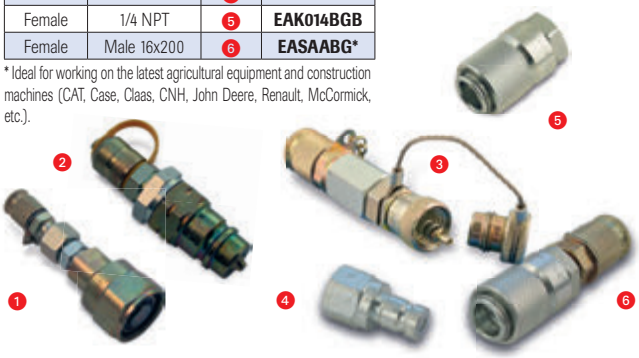

DOUBLE UNION CONNECTORS WITH PRESSURE CONNECTION

(PN) series	Tube diameter	Thread F	L	h	Reference
L (250)	6	M12 x 150	51	50	TM06L
	8	M14 x 150	51	50	TM08L
	10	M16 x 150	54	50	TM10L
	12	M18 x 150	54	51.5	TM12L
	15	M22 x 150	57	53	TM15L
L (160)	18	M24 x 150	57	54	TM18L
	22	M30 x 200	63	56	TM22L
S (400)	8	M18 x 150	56	50	TM08S
	10	M18 x 150	58	50	TM10S
	12	M20 x 150	58	50	TM12S
	14	M22 x 150	63	51.5	TM14S
	16	M24 x 150	63	53	TM16S
	20	M30 x 200	71	56	TM20S
	25	M36 x 200	78	58.5	TM25S
BSP tube	13.25	M20 x 150	65	46	TM13
	16.75	M24 x 150	54	49	TM17
	21.25	M30 x 150	74	53	TM21
	26.75	M36 x 150	79	50	TM27

S: DIN heavy duty series; L: DIN light duty series

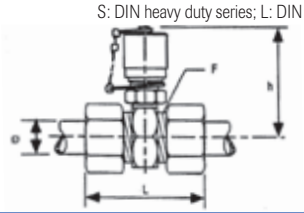

INVERTED T-SECTIONS WITH 16X200 PRESSURE CONNECTION

Ideal for taking pressure readings between a hose and a cylinder. Insert the union and you're done!

BSP mounting

Dimensions	References
1/4	PPT14BSP
3/8	PPT38BSP
1/2	PPT12BSP
5/8	PPT58BSP
3/4	PPT34BSP
1"	PPT100BSP

ORFS mounting

Dimensions	References
9/16	PPT916F
11/16	PPT116F
13/16	PPT316F
1"	PPT100F
1" 3/16	PPT131F

SAE mounting

Dimensions	References
9/16 SAE	PPT916S
7/16 SAE	PPT716S
7/8	PPT078S

ISO 6149 mounting

Dimensions	References
for 22x150 coupler	PPT2215I

JIC mounting

Dimensions	References
7/16	PPT716J
1/2	PPT012J
9/16	PPT916J
3/4	PPT034J
7/8	PPT078J
1" 1/16	PPT111J
1" 5/16	PPT151J

DIN S mounting

Dimensions	References
10S	PPT10S
12S	PPT12S
14S	PPT14S
16S	PPT16S
25S	PPT25S
30S	PPT30S

DIN L mounting

Dimensions	References
10L	PPT10L
12L	PPT12L
15L	PPT15L
18L	PPT18L
22L	PPT22L
28L	PPT28L
22L	PPT35L

REVERSIBLE HYDRAULIC TESTERS

To test the performance of pumps, motors, valves and cylinders, or the entire hydraulic circuit. These testers allow the checking of temperature and pressure.

- Stand-alone: does not require any power supply, ideal for fault finding.
- User-friendly: clear display, easy to read.
- Practical: can be connected to return or pressure line.
- The load valve can be used to simulate a pressure build-up.
- Steel box with removable cover.

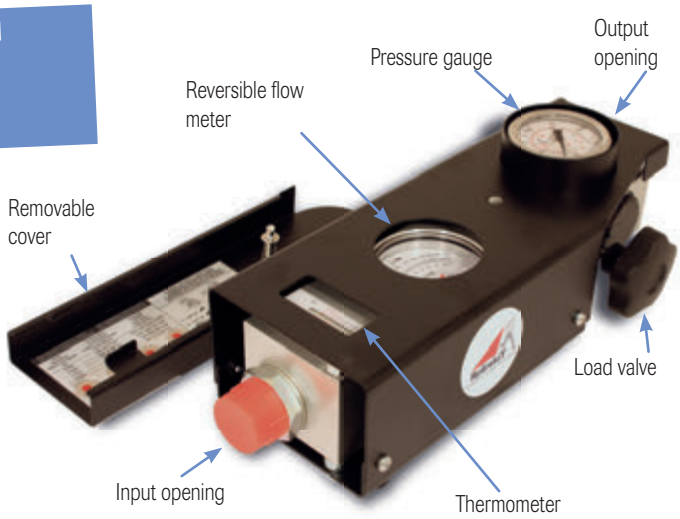

Composition

- 200 l/min analogue and reversible flow rate indicator with built-in thermometer, 20°C to 110°C.
- Load valve with safety disks.
- Glycerine bath pressure gauge.
- 4 replacement safety disks.

Reference	Flow range (l/min)	Max. pressure (bar)	Loss of load in both directions (bar)	Temperature range (C°)	Union	Dimensions	Weight
EAT200420A	10 - 200	420	14.5	-20 to +110	1" BSPP male	310 x 105 x 120 mm	**5 kg**

OPTIONAL: Hose, coupler and union kit:

- 2 x 2 m hoses, 30S.
- 2 x couplers 1/2BSP.
- A set of hoses.

Reference: KFEAT200420A1

PORTABLE BI-DIRECTIONAL HYDRAULIC TESTERS

These testers have been designed for testing hydraulic pumps, motors, hydrostatic transmissions and all high-pressure high-flow hydraulic installations in both flow directions.

Applications

- Easy to use, these lightweight carrying cases soon become indispensable tools for repairs and fault finding.
- These testers allow simultaneous checking of flow, speed, pressure and temperature.
- Operating at pressures of up to 480 bar, the load valve can be used to simulate most of the real working conditions of your excavators, loaders, backhoe loaders, etc.

Flow rate (l/min)	Pressure (bar)	Mounting	Two-way connection	Display	Reference	Hose kit reference
10 to 300	420	1" female	Yes	Digital	**EAT300420B**	**500127**
20 to 800	210	1" 1/2 female	Yes	Digital	**EAT800350A**	**-**
20 to 800	480	1" 1/2 female	Yes	Digital	**EAT800480A**	**-**

4010

Pressure, flow rate, temperature and frequency readings on mobile or fixed machine hydraulic circuits.
For R & D, maintenance and after sales servicing on agricultural and construction machines.

- It is portable, and the reading is displayed on a large colour screen (curves or values), 5 actual channels + 5 virtual channels (delta P, derived, Power),
- Measuring activated:
  - By a pedal,
  - Remotely,
  - By a value defined by the user (trigger function).
- Formulated diagnostic and report issuing (software provided).
- Upgradable: optional voltage/current/thermocouple operational modules.

Specifications

- 100 measuring series with 1 million measured values
- 4 analogue channels including 1 x Frequency/Analogue switchable channel
- 1 frequency channel
- Measures from 1 second to 41 days, sampling rate configurable from 1 ms to 999 min

Case with 2 pressure sensors, 1 temperature sensor, compartment for 1 flow turbine

- 1 x 4010 with USB cable, 220 V charger and software
- 2 x 0 - 600 bar scaled pressure sensors
- 1 x 50 - 150°C scaled temperature sensor
- 2 x direct unions for pressure connection (16x200).
- 4 x 5 m measuring cables
- 1 thermoplastic carrying case.

Option:

- Black measuring box (Multibox 3061) without screen (4 measuring channels, measures from 1 second to 8 hours, sampling from 1 ms to 1 min (components same as above except with additional 220 V charger and 12 - 24 V cigarette lighter cable + USB stick with PC software).

3020: 3 TO 24 CHANNEL DIGITAL HYDRAULIC MEASUREMENT SYSTEMS

- Complete range for all hydraulic measuring applications,
- Traceability: logs data onto PC,
- Control monitoring: performance deduction from overlapping curves,
- Automatic sensor recognition,
- CAN Bus compatibility: 5060 plus and 4010 CAN,
- Upgradeable, various accessories for other physical quantities.

Applications

- Measuring on mobile construction, agricultural and industrial machines.
- Measuring on test benches.
- On-site industrial hydraulic measuring.

PARTICLE COUNTER

- Displays ISO classes on a backlit display,
- Simple programming,
- Quick detection of oil pollution level either by triggering an alarm or using the analogue feedback.
- With 300 bar flow regulator (ref Hydrotechnik 2103-A0-O2.00), option of 420 bar on request.

BIDIRECTIONAL DIGITAL HYDRAULIC TESTERS

Monitors pressure, flow and temperature on mobile construction machines and agricultural equipment. Monitor difference in pressure on LS circuit.

- Easy to use: automatic sensor recognition.
- Easy to read: two sensors return information values at the same time.
- Traceability: data recorded within one minute curve (displayed on PC in real time or logged).
- Practical: turbine with built-in load valve on 300 and 600 l/min model.

Item	Monitor	Pressure sensor (bar) 5 m cable		Pressure sensor union	Temperature sensor (C°)	Turbine (l/min)				Cable (m)		Case		Reference
						Without load valve		With load valve						
		0 to 60 (¼)	0 to 600 (¼)	(16 x 200)	- 50 to 200	300 (1")	600 (1" 1/4)	300 (1" 1/4)	600 (1" 1/4)	2.5	5	Standard	Double wall	
1	1		1	1	-	-	-	-	-	-	-	1	-	AMHVMP006P
1	1	1	1	2	-	-	-	-	-	-	-	1	-	AMHVMP002P
1	1	-	2	2	-	-	-	-	-	-	-	1	-	AMHVMP005P
2	1	1	1	2	-	1	-	-	-	1	-	-	1	AMHVMP003P
2	1	-	2	2	-	1	-	-	-	1	-	-	1	AMHVMP004P
2	1	1	1	2	-	-	-	1	-	1	-	-	1	AMHVMP014P
3	-	1	-	-	-	-	-	-	-	-	-	-	-	EAM060AHK1 *
3	-	-	1	-	-	-	-	-	-	-	-	-	-	EAM600AHK1 *
4	-	-	-	-	-	1	-	-	-	-	-	-	-	EAQ300HK **
4	-	-	-	-	-	-	1	-	-	-	-	-	-	EAQ600HK2 **
5	-	-	-	-	-	-	-	1	-	-	-	-	-	EAQ300CHK1 **
5	-	-	-	-	-	-	-	-	1	-	-	-	-	EAQ600CHK1 **
6	-	-	-	-	1	-	-	-	-	-	-	-	-	AMHCT0200P **
7	-	-	-	-	-	-	-	-	-	-	1	-	-	EATCABLE5M01HK
7	-	-	-	-	-	-	-	-	-	1	-	-	-	EATCABLE2M5HK
8	-	-	-	1	-	-	-	-	-	-	-	-	-	EAKAHAA

* Order sensor connector EAKAHAA

** Order cable reference EATCABLE5M01HK

I CONTROL: FLOW AND PRESSURE INDICATOR

Flow and pressure values measured at the same time.

- Economical.
- Records min and max flow and pressure peaks.
- Visual and audible signal emitted if a pre-recorded max / min flow or pressure value is exceeded.
- Operating time meter: meter starts as soon as a p or Q setting is reached.
- Can be attached to a machine.

Reference: IDDP01V1

DIESEL TRANSFER

- Fast on-site supplying.
- Available in a mobile version or for fitting on the machine.

For transferring diesel from a tank to your machine on site.

Mobile version

- Easy, efficient transfer.
- Storage box for improved protection.
- Powerful, reliable transfer pump: 45 l/min.
- Built-in filter.
- Delivery hose with gun and suction pipe with strainer (fastening for transport purposes).

Reference:
EAG045000A

Product sheet available on request

Version for fitting on machine

- Extremely clean oil transfer at an unbeatable price.
- Supplied with 4 m pipe and 2 m cable.
- Practical with built-in switch and gun.

Reference:
12V: EAG005000A
24V: EAG005000B

QUICKWASH: HYDRAULICALLY POWERED CLEANERS

- Stand alone and mobile: the cleaner is hydraulically powered. Possible to install it directly on the vehicle.
- High-performance cleaner: pressure: 150 to 170 bar depending on the model, flow: 9 to 11 l/min.
- Equipment safety and protection: flow regulator plus check valve prevent hydraulic overcharging and reversed connection.

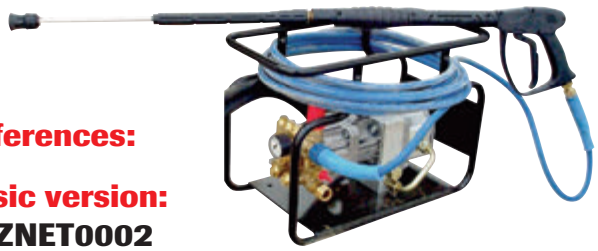

References:

Basic version:
EAZNET0002

Complete version (model with flow divider): EAZNET0001

Electric spool valve on circuit: contact us.

Pressurised water on-site to clean equipment before going on the road (to comply with current standards.)
Wheeled excavators, backhoe loaders, trailers, muck-spreaders...

Product sheet available on request

COMPRESS'AIR: HYDRAULIC POWERED AIR COMPRESSORS

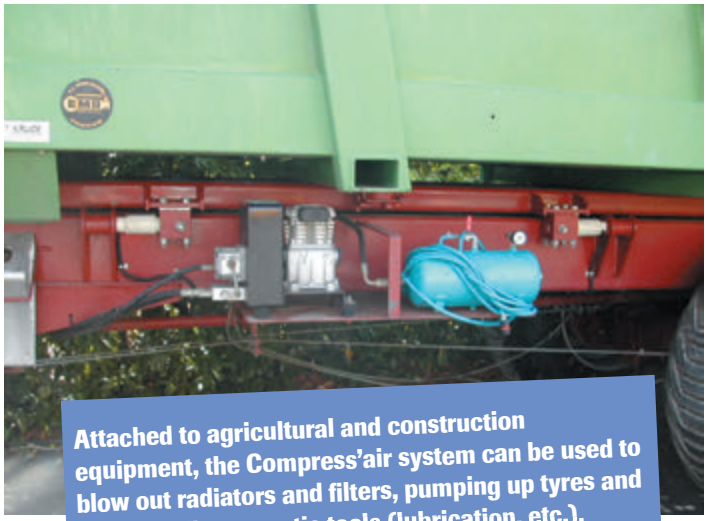

Attached to agricultural and construction equipment, the Compress'air system can be used to blow out radiators and filters, pumping up tyres and drive small pneumatic tools (lubrication, etc.).

- Stand-alone and mobile, the Compress'air is attached to the machine.
- Can be mounted on any equipment, low hydraulic power requirement (13 l/min 120 bar).
- Operates even when motor is switched off, practical due to reserve tank.
- Practical as machine does not need to be hydraulically modified, comes with flow controller (max 60 l/min) and check valve built into compressor.
- Made to measure, provision of hydraulic connection assembly tailored to each machine.

Options:

Blower with spiral hose (4 m):
Reference: EAZCOM0030

Connection and hose kit:
Reference:
EAZCOM0020
2 hoses, 15 L (L = 2.1 m)
and 1 hose, 10 L (L = 2.40 m)

Product sheet available on request

Hydraulic generation				Air generation							
Oil flow rate (l/min)	Oil pressure (bar)	Max pressure on motor drain (bar)	Mounting	Maximum pressure (bar)	Air flow rate (m^3/h)	Activation pressure (bar)	Safety valve on calibration tank (bar)	Tank capacity (l)	Automatic hydraulic power cut-off	Specifications	References
13 to 60	100 to 210	3	P = 3/8BSP T = ½ Drain 1/4BSP	10	14 m^3/h at 7 bar	7	11	15	No	-	**EAZCOM0011**
								50	No	-	**EAZCOM0012**
								50	Yes	Open centre	**EAZCOM0013**
								50	Yes	Closed centre	**EAZCOM0014**

HYDRAULIC DRIVE GENERATORS

- Electrical power supply mounted on your vehicles.
- Easy to mount.

Specifications

- Power: 4.2 KVA i.e. approx. 3,300 Watt.
- Equipped with 2 single-phase connectors with circuit-breaker.
- Minimum required flow rate: 25 l/min.
- Mounting with flow control.
- Maximum flow rate: 65 l/min.

Reference: EAZGENE001

230 V single-phase mobile power supply.

TYRE BEAD SPLITTERS

- Saves time: direct intervention without having to completely remove the wheel.
- Practical: Light and compact bead splitter.
- No power requirement: Operates with a foot pump.

Specifications

- Two stage splitting operation:
  - > A hydraulic cylinder pushes the splitter between the rim and the tyre bead,
  - > A second cylinder presses on the tyre bead facilitating the separation operation.
- The exterior and interior of the bead can be removed without having to remove the wheel; removal of tyre from both sides of the rim.

1

Composition

- 1 tyre bead splitter.
- 1 hydro-pneumatic pump or hydraulic foot pump.
- 1 x 2.5 m hose.
- 1 coupler and set of unions.
- 1 metal storage box (630 x 310 x 300 mm).

2

1 Hydraulic foot pump version
Reference: DHP100

2 Hydro-pneumatic pump version
The pump must be connected to the compressed air supply (7 bar).
Reference: DHP200

ELECTRICAL MAINTENANCE KITS

Basic electrical kits

Vital for your checks

Basic kit	Stock kit
5 black Hirschmann connectors	**10 black Hirschmann connectors**
5 grey Hirschmann connectors	**10 grey Hirschmann connectors**
3 luminous seals	**5 luminous seals**
1 test stylus	**1 test stylus**
Ref. EAZKITEL03	**Ref. EAZKITEL04**

Breakdown kits

- The kit includes: 2 probe grips, 2 cables, 2 elephant clips, 1 probe.

Reference: EAZKITEL01

Multimeter kits

- The kit includes: 2 probe grips, 2 cables, 2 elephant clips, 1 multimeter and probe.

Reference: EAZKITEL02

INFRARED LASER POINTER THERMOMETERS

Specifications

- Precise non contact IR temperature measurement.
- Built-in laser pointers increase the target accuracy.
- Super-wide temperature range from -50°C to +850°C.
- Max/Min record.
- LCD display with backlight.
- Optical resolution: D:S=30:1.

Reference: E26ECTD4

SELF-ADHESIVE THERMOMETERS

Specifications

- Practical and easy to position.
- 8 graduation levels from 71°C to 110°C.
- Irreversible colour change.
- Records the max temperature.
- Format: 51 x 18 mm.

Reference: EA0071110A

TACHOMETERS

Applications

- Monitors the shaft rotation speed, contact or contact-less
- Monitors the linear speed with contact

- Quick: only takes a few seconds, contact or contact-less.
- Saves time: the linear speed (m/min, m/s, ft/min, in/min) is displayed in real time.

Specifications

- Measuring unit:
  -optical: rpm
  -contact: rpm, m/min, ft/mn
- Measuring range: optical rotation: 6 to 99999 rpm; contact: 1 to 19999 rpm
  - linear: optical: 0.1 to 1999.9 m/min; 0.3 to 6560 ft/mn
  - rotation resolution: < 1000 rpm: 0.1 rpm; > 1000 rpm: 1 rpm
  - linear resolution: < 100 m/mn: 0.01 m/min; >100 m/mn: 0.1 m/mn
  -accuracy: +- (0.05% of the reading + 1 digit)
- Automatic range selection; MIN and MAX recording
- Optical mode detection distance: 5 cm to 20 cm (in front of ambient light)
- Battery: 4 x 1.5 V AA or possible to use a DC 6V charger (not supplied)
- Dimensions: 217 x 84 x 43 mm
- Weight: approx. 265 g with the batteries

Reference: E26ETACHK3

MAGNETIC FIELD TEST STYLUS

- Quickly test your electric spool valve coils.
- Lights up near a magnetic field (coil).
- Self-test.
- Batteries supplied.
- Spare light.

Reference: E26ETEST01

PULLEY SPEED OF ROTATION FORMULA

- You know the linear speed in metres/min and the pulley diameter and you would like to know the pulley speed of rotation:

$$\text{Speed (rpm)} = \frac{\text{Linear speed (m/min)}}{\text{Pulley diameter (cm)}} \times 31.4$$

6 TO 18 MM MANUAL PIPE BENDER

- The lightest and most practical.
- Several rollers with different diameters.
- Better bend radius and prevents tubes from being crushed.

Reference: RBV0618

ELECTRONIC SURGE PROTECTORS: WELD WITH PEACE OF MIND

Applications

- During a welding task, voltage peaks are generated and absorbed by the battery. These peaks could damage the electronic monitoring unit.
- We recommend use of the surge protector rather than disconnecting the battery.

Voltage (V)	Reference
12	EAZPROTEC01
24	EAZPROTEC02

METAL MARKER PEN

Applications

- Vital for keeping track of installations.
- For writing on metal.
- Can be applied to all types of metal.

Colour	Reference
White	EAZECRITM1
Red	EAZECRITM2
Yellow	EAZECRITM3
Black	EAZECRITM4
Green	EAZECRITM5
Blue	EAZECRITM6
6 colours	EAZECRITX6

12 V/220 V TRANSFORMERS

- 220 V current source on breakdown vehicles.
- For recharging electric tool batteries.
- Powers mobile IT systems or electric tools.
- Professional range.
- Protects against short-circuits, overvoltages, high temperatures and battery fault voltages.

Reference	E18C0A0E15	E18C0A0E16
Input voltage (V DC)	12 (10 to 16)	
Maximum battery current (A)	47	**94**
Output voltage (V AC)	230 V AC ± 2%	
Continuous output (W)	500	**850**
Weight (kg)	6.2	**10.5**
Output during 10 min (W)	600	**1050**
Max. output (W)	1000	**2000**

DEFINITION RULE FOR FITTINGS AND THREAD GAUGES

Definition rule for fittings and flanges: EAZREGLE01

BSP and metric thread gauge: EAZJAU0001

UNF thread gauge: EAZJAU0002

Complete kit with rule + 2 thread gauges: EAZREGLE02

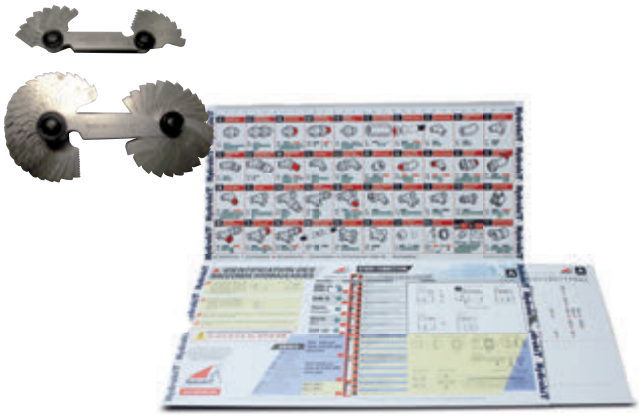

BATTERY START POWER TESTER

Specifications

- 6 and 12V battery tester.
- It recognises batteries in poor condition.

Reference:
E26ETESTBAT1

TRAILER PLUG TESTER

Specifications

- To test the correct function of the trailer connection plug on tractors (light signalling system).

Reference:
E26ETESTREM1

DIGITAL TYRE PRESSURE TEST GAUGE

Specifications

- Measures the pressure in the tyres.

Reference:
EAZMANPNEU1

WORKSHOP SERVICE PLUGS

Specifications

- Prevent spill from hoses and machines into the environment.
- Keep working areas clean.
- Applications fields:
  > Hydraulics: hoses, pumps, motors
  > Automobile: braking, fuel, oil, air conditioning
  > Industry: cutting oil, cooling system
  > Surface treatment: paint, stripping.
- Multi usage:
  > Stop pollution: prevents oil or chemicals leakage when repairing.
  > Reduce the costs (no need to add oil).
  > No intrusion of pollution.
  > High quality rubber, oil and chemicals resistant.
  > Resistant: working temperature between -25° and +90°C

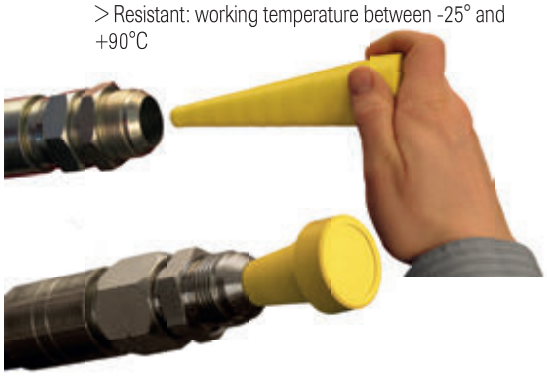

- MICRO

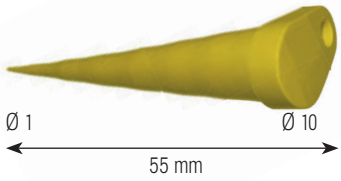

- MEDIUM

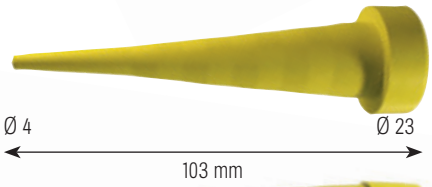

- XL

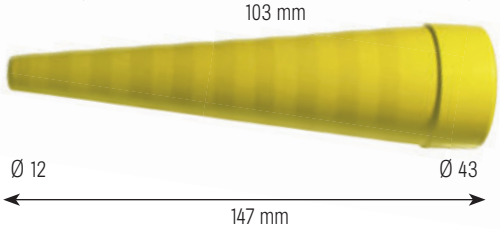

Description	Dimensions	Box of	Reference
Micro plugs	1 - 10 mm	20	**EAZYELS**
Medium plugs	4 - 23 mm	10	**EAZYELM**
XL plugs	12 - 43 mm	4	**EAZYELXL**

CRIMPER MANUAL PUMP VERSION

- The Tubomatic EAZPSMH47PM crimper is ideal for crimping hydraulic hoses up to 1", two wires.
- This versatile machine can be used for a number of different applications, and is the perfect tool for mobile workshops.
- Main features
  - manual pump,
  - light indicating when the crimping diameter has been reached.

Crimping force	100 tonnes
Capacity	1" 2 SP
max. crimping Ø	46 mm*
Jaw opening cap.	Ø set of jaws + 20 mm
90° connectors	3/8"
Dimensions L x W x H	390x510x300 mm
Weight	35 kg
Jaw storage	included
Oil	included
Tool for changing the jaws	Option
Special jaws	Option
Reference	EAZPSMH47PM
* with jaw holder	

CRIMPER ELECTRIC VERSION

- The Tubomatic EAZPSEH47EL crimper is ideal for crimping hydraulic hoses up to 1", four spirals.
- This versatile machine can be used for a number of different applications, and is the perfect tool for repair workshops.
- Main features
  - electrically driven pump,
  - light indicating when the crimping diameter has been reached.

Crimping force	120 tonnes
Capacity	1" 4 SP
max. Ø	46 mm*
Jaw opening cap.	Ø set of jaws + 20 mm
90° connectors	3/8"
Standard voltage	400V 50Hz 3PH
Motor power	1.5 kW
Dimensions L x W x H	450x420x530 mm
Weight	80 kg
Jaw storage	included
Oil	included
Tool for changing the jaws	included
Special jaws	Option
Reference	EAZPSEH47EL
* with jaw holder	

CRIMPER ECONOMIC VERSION

- The Tubomatic EAZPSMH47E crimper is ideal for crimping hydraulic hoses up to 1", 2 wires.
- Versatile and easy to transport, it is the perfect tool for on-site breakdowns.
- Connection (via supplied couplers) to the pump of your choice (manual, hydro-pneumatic, power pack, etc.)
- Main features
  - light indicating when the crimping diameter has been reached.

Crimping force	100 tonnes
Capacity	1" 2 SP
max. crimping Ø	46 mm*
Jaw opening cap.	Ø set of jaws + 20 mm
90° connectors	3/8"
Dimensions L x W x H	300x345x330 mm
Weight	26 kg
Leverage	30 kg
Jaw storage	included
Oil	included
Tool for changing the jaws	Option
Special jaws	Option
Reference	EAZPSMH47E
* with jaw holder	

CUTTING SAW

- The cutting saw EAZTFLTF1ECO is an inexpensive and compact machine, ideal for cutting hydraulic hoses up to 1".

Specifications

- Connection for suction,
- Manually operated,
- Recessed blade and guards for the operator's safety.

4-spiral capacity	1"
2-wire capacity	1"
max Ø	45 mm
Speed (rpm)	2900
Blade Ø	250 mm
Dimensions L x W x H	515x580x355 mm
Weight	28 kg
Standard voltage	380 V
Motor power	0.75 kW
Connection for suction	included
Reference	EAZTFLTF1ECO

SET OF JAWS

- For 47-type crimpers
- Adapts to all crimpers on this page.

Set of jaws reference	Recommended end diameter (mm)	
	min Ø	max Ø
EAZMORS16	16	19
EAZMORS19	19	22
EAZMORS22	22	25
EAZMORS25	25	29
EAZMORS29	29	34

Other jaw dimensions available on request (10, 12, 14 mm).

Kit 5 reference:
EAZMORS16A29

PROBE GRIPS

Specifications

- The probe grip enables measurements to be taken without having to cut the wire.
- 4 mm socket unions.

Name	Reference
Red probe grip + black probe grip	EAZPICFIL4

CROCODILE CLIPS

Specifications

- Ø 0.2 mm to Ø 32 mm opening.
- 4 mm socket unions.

Name	Reference
Red clip	EAZCROC001
Black clip	EAZCROC002
Red clip + black clip	EAZCROC003

UNIVERSAL TEST METERS

Specifications

- CE-certified CATIII.
- AC/DC voltage, AC/DC intensity, resistance, capacity, frequency, duty cycle (PWM), continuity, diode test

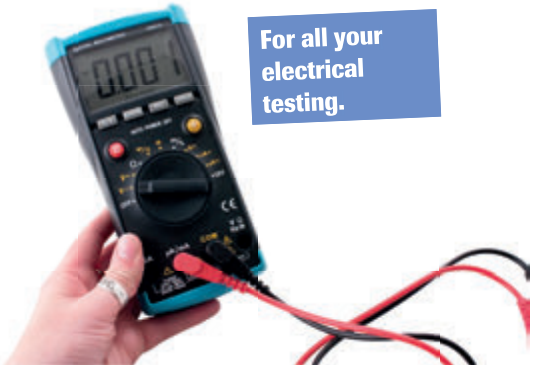

For all your electrical testing.

Reference: AMEMUITR4E

CABLES

Specifications

- 4 mm banana plug.
- Protected tip + rear connection.
- Length 100 cm.
- CAT III 1000V approved.

Name	Reference
Red cable	EAZCABLE07
Black cable	EAZCABLE08
Red cable + black cable	EAZCABLE09

RED PROBES

Specifications

- L = 145 mm.
- 4 mm socket unions.

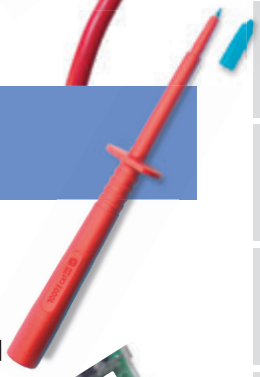

Reference: EAZPOINT01

LUMINOUS SEALS

Specifications

- Compact and practical.
- 12 to 24 V DC or AC.

Name	Reference
1 luminous seal	EAZJLPHN01
5 luminous seal kit	EAZJLPHNK1

DEUTSCH CONNECTOR KIT

Specifications

- Case of male and female 2 to 12-pin connectors with crimping tool.

Reference: EAZKITEL08

PLIERS FOR CRIMPING TERMINALS

Specifications

- Professional crimping.
- Available in 2 versions:
  > Crimping pliers for Deutsch 0.5 to 6.0 mm² connections
  > Multifunctional pliers: 5 functions in one tool.
- 2- to 12-pin connectors available on request.

Name	Reference
Crimping pliers for Deutsch Molex connections, 0.5 - 6.0 mm²	E26EPCO002
Multifunction pliers with 5 functions	E26EPCO003
Stripping pliers for cables with a cross-section: 0.03 to 10.0 mm²	E26EPAD002

HYDROCLIPS STANDARD ELECTRIC CASE

Specifications

- A highly sturdy carrying case (its cover can resist a load up to 100 kg), convenient and light.
- It clips together with other cases for easy transport.
- Contents adapted for electrical diagnostics, including:
  > 1 thermometer
  > 1 universal tester
  > 1 tachometer
  > 1 tyre pressure gauge
  > 1 magnetic stick tester
  > 1 uni-paint marker for metal
  > Luminous seal
  > 2 probe grips
  > 2 crocodile clips
  > 2 test leads
  > 1 test probe

Reference: EAZKITEL10

HYDROCLIPS ELECTRIC AND CONTROL CASE

Specifications

- A highly sturdy carrying case (its cover can resist a load up to 100 kg), convenient and light.
- It clips together with other cases for easy transport.
- Contents:
  > 1 universal tester
  > 1 pressure gauge 40 bar with gauge connection
  > 1 pressure gauge 400 bar with gauge connection
  > 2 pressure hoses 2,0 m
  > 1 pressure tapping 1/4 BSP
  > 1 pressure tapping 3/8 BSP
  > 1 tachometer

Reference: EAZKITEL11

MADE-TO-MEASURE CARRYING CASE

We can compose your case according to your requirements. **Contact us with your configuration from the pages of this section and we will compose the case for you.**

Notes

When the client orders, he implicitly accepts our terms and conditions of sale and therefore, relinquishes his own conditions of purchasing. In every case, the order must be approved by our company to be valid.

These conditions of sale came into force on the 1st of December 2006 and we reserve the right to modify these conditions without prior notice at any time.

The diagrams we have made are our private property, it is forbidden to reproduce them even when they are included within the invoice.

The client's diagrams and other belongings of any kind are not guaranteed against any risk. Our responsibility is excluded in any accident, damage, or disappearance, even if it happened in our workshops or during the transport. The delivered goods remain our property until full payment has been made. The pledge of, or assignment of ownership as security is not permitted until full payment has been made.

Lead and delivery times are only indicative, they do not bind us in any way and will not represent a reason for compensation.

When the goods are assembled according to the client's specifications or diagrams, we will accept no liability for any defect caused by an erroneous creation.

When an order is cancelled, the expenses incurred will be invoiced to the client, whether it happens after the dispatch or after the beginning of the production. If the production is complete, the full price will be invoiced.

DISPATCH

The client must take responsibility for the goods during the transport, even if they are sold with carriage paid. In the case of loss or damage during the transport, the client must take recourse against the transport, i.e. express reservations on the transport bill, send a registered letter to the carrier and a copy to Hydrokit.

All extra expenses due to Express delivery (guaranteed delivery on the next day) compared to usual delivery will be the client's responsibility.

To have more information about our delivery options and conditions, please consult our sales department.

All claims regarding the quality of the goods (excluding any carriage complaint) must be completed immediately during the delivery or collection of goods when it is a visible defect or, within 8 days following the said delivery or collection when the defect is not visible at first sight.

GUARANTEE

1) Our new products are guaranteed against all faults in material and errors in construction for twelve months after the day of the delivery. At the end of this period, the guarantee ceases as of right.

2) Excluded from the guarantee are:

- Damages resulting from misuse (especially from neglect or lack of maintenance or abuse, accidental damage, abnormal usage, wear, and tear.
- Equipment altered, adapted, repaired or dismantled, even partially and without our knowledge.
- Supply of oil following its loss due to breakdown or leak.

3) The guarantee is limited to the replacement of components recognised as defective by our technical service without us being responsible in any way for the cost of the work of stripping down and reassembling nor for the sequential cost of the loss of use of the machinery nor for the loss of oil due to a breakdown.

4) In order to call the guarantee into operation, the client must advise us within three clear days and in writing the faults which he claims to have found in our equipment and to provide detailed evidence.

5) The guarantee will not apply if the item is not returned in the condition in which it failed or if the item has been tampered with, repaired or modified either by a third party, the user or our customer.

6) The item will always be invoiced and will only be refused when our technical services have accepted the guarantee.

7) Our liability is expressly limited to the above guarantee. It cannot under any circumstance be invoked in case of accidents caused to people or entity following a defect or fault of any equipment sold.

RETURNED GOODS

1) Anything returned must be accepted by our commercial department who will give a reference number that must be quoted on the returned package.

2) A copy of the delivery note or the invoice must be returned with the package.

3) The defective items must be sent carriage paid.

4) Returns will only be accepted for new items which have not been dismantled, repaired or modified by the user, a third party or the client.

5) In every case, the refund will be 20% less than the original invoice.

6) The balance due following a return will be substracted from the next bill.

7) The cost of transport in both directions is the responsibility of the customer.

8) Dispute: in case of dispute, the court of la Roche sur Yon is the only arbitrator.

Commercial bills and settlement facilities do not change or alter any legal clause.

PAYMENT

The place of payment is la Roche sur Yon, even when paying with bills of exchange.

- When ordering for the first time, the goods are to be settled up on delivery.
- Bank reference and VAT number are required with the first order so that an account may be opened.
- Invoices may be settled by bills of exchange at 30 days' date, on the 15th or the 30th depending on the delivery date. According to French statute n°92-1442 of December 31st 1992, every bill that is not settled at its expiry date will result in late payment penalties (at the rate mentioned on the front of the invoice.)

When the client does not pay an invoice on time, it will result in the demand of the entire amount due and the suspension or cancellation of deliveries (i.e. deliveries of the non-paid contract and of all the other current deliveries of past or future contracts.

The delivered items will be demanded back if the client does not pay an instalment of a staged payment. The instalments already settled will remain our property as compensation.

The delivered items remain our property until the last day of payment, in accordance with the French statute n°80-335 of May 12th, 1980.

DISPUTE

In case of dispute with a supplier or client, the court of our head office is the only arbitrator.

HYDROKIT ONLINE:

www.hydrokit.com

- Order on-line with your own price conditions
- Delivery time immediately advised
- Follow-up of your deliveries

DISCOVER VENSYS POST EQUIPMENT GROUP
SCAN CODE WITH YOUR MOBILE TO WATCH VIDEO

HydrokiT
HYDRAULIC GLOBAL SOLUTIONS

Headquarters:
Rue du Bocage - La Ribotière
85170 LE POIRÉ-SUR-VIE (FRANCE)
Tel: +33 (02) 51 34 10 10

E-mail: info.uk@hydrokit.com
www.hydrokit.com

A COMPANY OF GROUP VENSYS